SPECIFICATIONS

Project Name

Volunteer Fire Station

Municipality of Casselman
745 Brébeuf
Casselman, ON

Volume 1 – Specifications
Division 0-14

Architectural
Issued for Tender

Project Number	Date
18100	**March 10, 2020**

Sault Ste. Marie
705.949.5291
421 Bay St. Suite 507
Sault Ste. Marie, ON, P6A 1X3

IDEA
INTEGRATED DESIGN
ENGINEERING + ARCHITECTURE

Ottawa
613.728.0008
595 Byron Avenue
Ottawa, ON K1A 4C4

Section No. *Title*

VOLUME 1 – Divisions 00 to 14

Section No. *Title*

VOLUME 2 – Divisions 21 to 32

Section No. *Title*

END OF SECTION

No.	*Name*
A000	COVER SHEET
A001	LEGENDS, KEYNOTES, ABBREVIATIONS, GENERAL NOTES
A010	ASSEMBLIES VERTICAL
A011	ASSEMBLIES HORIZONTAL
A020	DOORS AND WINDOWS
A030	GLAZING
A040	CASEWORK AND FINISHES
A050	TYPICAL MOUNTING HEIGHTS AND CLEARANCES
A090	CODE COMPLIANCE
A101	SITE PLAN
A201	FLOOR PLAN – FOUNDATIONS
A202	FLOOR PLAN - LEVEL 01
A203	ROOF PLAN
A301	REFLECTED CEILING PLAN - LEVEL 01
A401	EXTERIOR ELEVATIONS
A501	BUILDING SECTIONS
A551	WALL SECTIONS
A552	WALL SECTIONS
A601	FINISHES PLAN - LEVEL 01
A701	ENLARGED CONTEXT - KITCHEN
A702	ENLARGED CONTEXT - WASHROOMS
A703	ENLARGED CONTEXT – OFFICE
A704	ENLARGED CONTEXT - SUPPORT SPACE
A705	FLAT ROOF SCREEN AND SIGNAGE
A901	ROOF DETAILS
A902	SECTION DETAILS
S000	GENERAL NOTES AND DETAILS
S001	GENERAL NOTES AND DETAILS
S002	GENERAL NOTES AND DETAILS
S100	FOUNDATION / GROUND FLOOR PLAN
S101	ROOF FRAMING PLAN
S200	SECTIONS AND DETAILS
S300	BRACEFRAME ELEVATIONS
C-1	SITE SERVICING PLAN
C-2	GRADING PLAN AND EROSION AND SEDIMENT CONTROL PLAN
C-3	NOTES AND DETAILS
M010	MECHANICAL NOTES, LEGENDS & SCHEDULES
M020	MECHANICAL SCHEDULES AND CONTROLS
M110	SANITARY AND STORM PLAN
M210	DOMESTIC WATER AND COMPRESSED AIR PLAN
M410	HVAC AND NATURAL GAS PLAN
M420	ROOF PLAN
E000	ELECTRICAL LEGEND
E010	SINGLE LINE DIAGRAM AND DETAILS
E020	PANEL SCHEDULES – 1
E021	PANEL SCHEDULES – 2
E100	ELECTRICAL SITE PLAN
E211	POWER AND COMMUNICATION PLAN
E221	ROOF POWER PLAN
E311	LIGHTING SYSTEM PLAN
E411	SECURITY SYSTEM ROUGH-IN PLAN

END OF SECTION

1 INVITATION

.1 Bid Call:

.1 Irrevocable offers are signed under seal, free of fees, escalation clauses and qualifications, executed on the forms provided, and dated will be received by *the Municipal Clerk and/or Deputy Clerk* located at **751 St-Jean Street, Casselman Ontario, before 12:00 pm (noon) local time on Wednesday the 15th day of April, 2020**.

.2 Offers submitted after above time will be marked with the date and time received and returned to Bidder unopened.

.3 Submit the required supplementary *Bid* information on the *Supplement to Bid* forms provided within the times stipulated on the respective forms.

.4 Offers will be opened privately, immediately after time for receipt of all Bids.

.5 Amendments to submitted offer will be permitted if received in writing prior to Bid closing and if endorsed by same party or parties who signed and sealed the offer.

2 INTENT

.1 Intent of this *Bid* call is to obtain an offer to construct a new volunteer fire fighter's equipment, training and monitoring service facility at 745 Brebeuf St., Casselman, Ontario, K0A 1M0 for a Stipulated Price, in accordance with *Contract Documents*.

.2 Initiate the Work within 5 working days of receipt of notice of Contract award and/or specified by the *Owner's Representative*.

.3 All Work shall be completed by Summer 2021.

3 CONTRACT AND BID DOCUMENTS

.1 Contract Documents are identified as:
Casselman Volunteer Fire Station
745 Brébeuf, Casselman, ON, K0A 1M0
Project Number: 18100

prepared by the *Consultant*, IDEA Inc., and the *sub-consultants* Cleland Jardine Engineering LTD., D.B. Gray Engineering Inc. and listed in:
Drawing Cover Page - List of Drawings

.2 Definitions:

.1 Proposed Contract Documents:

.1 Stipulated Price Contract CCDC 2 2008 Edition
.2 Document 00 73 00 – Supplementary Conditions to CCDC 2.
.3 The Specifications Division 01 to 33 listed in Document 00 01 10 " Table of Contents".
.4 The Drawings listed in Document 00 01 15 'List of Drawings".
.5 Addenda issued during the bidding period.

.2 Bid Document:

.1 Proposed Contract Documents
.2 Document 00 21 13 – Instruction to Bidders.
.3 Document 00 41 13 – Stipulated Price Bid Form
.4 Document 00 43 36 – Supplement to Bid: Proposed Subcontractors
.5 Document 00 50 00 – Form of Contract, Bonds and Declarations
.6 Document 00 73 00 – Supplementary Conditions to CCDC2

.3 Bid, Offer, or Bidding: act of submitting an offer under seal.

.4 Bid Price: monetary sum identified in Bid Form as an offer to perform Work.

.3 Availability:

.1 Electronic versions of Bid Documents may be obtained by contacting the Municipality of Casselman Representative**:**
Marc-Andre Decoeur, CBO - Municipality of Casselman | e-mail: firehall@casselman.ca

.2 Bid Documents are made available only for purpose of obtaining offers for this project. Their use does not confer license or grant for other purposes.

.4 Examination:

.1 Upon receipt of Bid Documents verify that documents are complete. Verify that all the listed *Drawings* and all pages of each specification section are included.

.2 Immediately notify Consultant upon finding discrepancies or omissions in the Bid Documents.

.3 Provide written confirmation to Owner Representative that a complete set of documents have been received. Confirmation must be received **by 3:00 pm on the 27th day of March 2020.**

.4 Provide written confirmation to the Owner Representative of the intention to submit a bid. Confirmation must be received **by 3:00 pm on the 3rd day of April 2020.**

.5 Queries/Addenda:

.1 Inquiries shall be made by *All Contractors* bidding this project. Direct questions to:

Marc-Andre Decoeur, CBO - Municipality of Casselman
E-mail: firehall@casselman.ca

.2 Addenda may be issued during Bidding period. Addenda will become part of Contract Documents. Include costs in Bid Price.

.3 Verbal answers are only binding when confirmed by written addenda.

.4 Clarifications requested by Bidders must be in writing before 12:00 pm (noon) not less than five (5) days before date set for receipt of Bids. Reply will be in form of an addendum. Copy of addendum will be forwarded to known Bidders no later than three (3) working days before receipt of Bids.

.6 Product/System Options

.1 Where Bids Documents stipulate a particular product, substitutions will be considered by the Consultants and by the Municipality of Casselman Representative up to 10 days before receipt of Bids.

.2 When request to substitute product is made, the Consultants and the Municipality of Casselman Representative may approve substitution and will issue Addendum to known Bidders.

.3 In submission of substitutions to products specified, Bidders are to include in their Bid, changes required in Work to accommodate such substitutions. Later claim by Bidder for addition to Contract Price a result of changes in Work necessitated by use of substitutions will not be considered.

.4 Substituted products will be considered if submitted as an attachment to Bid Form.

.5 Ensure submission provides sufficient information to enable the Consultants and the Municipality of Casselman Representative to determine acceptability of such products.

.6 Provide complete information on required revisions to other work to accommodate each substitution, dollar amount of additions to or reductions from Bid Price, including revisions to other work.

.7 Provide specified products unless substitutions are submitted as noted and subsequently accepted.

.8 Approval to submit substitutions prior to submission of Bids is not required.

4 SITE ASSESSMENT

.1 Site Examination:
- .1 Visit project site and surrounding area before submitting Bid.
- .2 Contact Owner Representative at following address and phone number to arrange date and time to visit place of Work: 751 rue St-Jean St., Casselman, ON., K0A 1M0 | 613-764-3139 x518.
- .3 Visit to project site has been arranged for Bidders as follows : 745 Brébeuf St., Casselman on the 27th day of March 2020 from 1:30pm to 3:00pm
- .4 To assist Bidders in assessing subsoil conditions at site, test hole will be dug at 745 Brébeuf St., Casselman at 1:45pm on the 27th day of March 2020 only if requested by bidders.

.2 Bidders Briefing:
- .1 Due to the COVID-19 situation, A Bidders briefing will not be scheduled. Questions may be ask as stated above.

.3 Before submitting a *Bid*, carefully examine the *Bid Documents* to establish the extent of the *Work* and visit and examine the site and surrounding are and become fully informed of all the existing conditions, limitations and difficulties which may arise. Include in the *Bid* proper breakdown of the cost of all labour, materials, equipment and services required to complete the *Work*. Failure by the *Contractor* to become fully acquainted with existing conditions under which the *Work* is to be performed will not be justification for additional compensation.

.4 The *Owner* will not consider any claims for additional payments during the execution of the *Work* for extra work or difficulties encountered resulting from conditions which were either visible or could be reasonably inferred from examination of the *Place of the Work*, and the information provided in the *Bid Documents*.

5 BID SUBMISSION

.5 Bid Ineligibility:
- .1 Bids that are unsigned, improperly signed or sealed, conditional, illegible, obscure, contain arithmetical errors, erasures, alterations, or irregularities of any kind, may be declared informal at Owner's discretion.
- .2 Bids with Bid Forms and enclosures which are improperly prepared may be declared informal at Owner's discretion.
- .3 Bids that fail to include security deposit, bonding or insurance requirements will be declared informal at Owner's discretion.

.6 Submissions:
- .1 Bidders are solely responsible for delivery of their Bids in manner and time prescribed.
- .2 Submit one copy of executed offer on Bid Forms provided, signed and with corporate seal in sealed opaque envelope, clearly identified with Bidder's name, project name and Owner's name on outside.
- .3 Insert closed and sealed Bid Form envelope in larger opaque envelope and label this envelope as noted above.
- .4 An abstract of submitted Bids will be made available to Bidders following Bid opening.

6 BID ENCLOSURES/ REQUIREMENTS

.1 Security Deposit:
- .1 Bids are to be accompanied by security deposit as follows: Bid Bond in an amount not less than 5 percent of Bid price; or certified cheque in amount of not less than 5 percent of Bid price.
- .2 Endorse Bid Bond or certified cheque in name of Owner as obligee, signed and sealed by principal (Contractor) and surety.
- .3 Use most current edition CCDC approved bond forms.
- .4 Security deposit will be returned after delivery to Owner of required Performance and Labour and Materials Payment Bond(s) by accepted Bidder.
- .5 If no contract is awarded, security deposits will be returned.

.2 Consent of Surety (Agreement to Bond):
- .1 Submit with Bid Form and Bid Bond, Consent of Surety, stating that surety providing Bid Bond is willing to supply Performance and Labour and Materials Payment Bond specified.
- .2 Include cost of bonds in Bid Price.

.3 Performance Assurance:
- .1 The accepted Bidder must provide a 50% Performance and 50% Labour and Materials Payment Bond in accordance with Article 11.2 of the General Conditions of the Contract CCDC 2.
- .2 Include cost of bonds in Bid Price.

.4 Insurance:
- .1 Provide signed "Undertaking of Insurance" on standard form provided by insurance company stating intention to provide insurance to Bidder in accordance with insurance requirements of Contract Documents.
  - .1 Coverage Limit: $2,000,000.00
  - .2 Name of Insurered to be:
    - .1 Municipality of Casselman

.5 Bid Form Requirements:
- .1 State in Bid Form, time required to complete Work. Completion date in Agreement must be completion time added to commencement date.
- .2 Bidder, in submitting an offer, accepts time period stated in Contract documents for performing Work. Completion date in Agreement is completion time added to commencement date.
- .3 Consideration will be given to time of completion when reviewing Bids submitted.

.6 Fees for Changes in Work:
- .1 Refer to CCDC 2-2008, PART 6 - CHANGES IN THE *WORK* and Section 00 73 00 - Supplementary Conditions.

.7 Bid Signing:
- .1 Bid Form to be signed under seal by Bidder.
- .2 Sole Proprietorship: signature of sole proprietor in presence of witness who shall also sign. Insert words "Sole Proprietor" under signature. Affix seal.
- .3 Partnership: signature of all partners in presence of witness who shall also sign. Insert word 'Partner' under each signature. Affix seal to each signature.
- .4 Limited Company: signature of duly authorized signing officer(s) in normal signatures. Insert officer's capacity in which signing officer acts, under each signature. Affix corporate seal. If Bid is signed by officials other than President and Secretary of company, or President-Secretary-Treasurer of company, copy of by-law resolution of Board of Directors authorizing them to do so must also be submitted with Bid in Bid envelope.
- .5 Incorporated Company: signature of duly authorized signing officer(s) in normal signatures.

Insert officer's capacity in which signing officer acts, under each signature. Affix corporate seal. If Bid is signed by officials other than President and Secretary of company, or President-Secretary-Treasurer of company, copy of by-law resolution of Board of Directors authorizing them to do so must also be submitted with Bid in Bid envelope.

.6 Joint Venture: each party of joint venture must execute Bid under respective seals in manner appropriate to such party as described above, similar to requirements of Partnership.

.8 Appendices to Bid Form:

.1 Appendix A - Contract Documents: complete listing as scheduled in Contract Documents].

.9 Supplements to Bid:

.1 Document 00 43 36 – Supplement to Bid: Proposed Subcontractors: include names of Subcontractors and portions of Work the Bidder will perform.

7 OFFER ACCEPTANCE/ REJECTION

.1 Duration of Offer:

.1 Bids to remain open to acceptance and irrevocable for 30 days after Bid closing date.

.2 Acceptance of Offer:

.1 Owner reserves right to accept or reject any or all offers.

.2 The lowest bid may not be necessarily the successful Bidder.

.3 After acceptance by Owner, Owner Representative will issue to successful Bidder, written Bid acceptance.

.4 After Bid has been accepted, unsuccessful Bids will be returned to respective Bidders with submitted Bid securities and other requested enclosures.

8 WORKPLACE SAFETY AND INSURANCE BOARD (WSIB)

.1 Attention is drawn to General Conditions wherein is stated that the "The Contractor shall at the time of entering into any Contract with the Owner, make a statutory declaration or furnish a satisfactory clearance letter from the Workplace Safety and Insurance Board stating that all assessments or compensation payable to the Workplace Safety and Insurance Board have been paid...".

.2 The selected Bidder shall submit such statutory declaration or clearance letter to the Owner in triplicate together with the Agreement executed by the said Bidder, prior to commencement of the Work. One copy of the statutory declaration or clearance letter shall be bound into each of the three executed sets of the Contract.

9 OCCUPATIONAL HEALTH AND SAFETY

.1 In order to avoid any misunderstanding as to the nature of the work to be performed herein, the Contractor by executing this Contract, unequivocally acknowledges that the Contractor will take on the role of the constructor within the meaning of the Occupational Health and Safety Act, and will undertake to carry out the duties and responsibilities of a constructor with respect to the work.

.2 It is specifically drawn to the attention of the Bidder that the Occupational Health and Safety Act provides in addition to other matters that, "A constructor shall ensure, on a project undertaken by the constructor that:

(a) the measures and procedures prescribes by this Act and the regulations are carried out on the project;

(b) every employer and every worker performing work on the project complies with this Act and the regulations; and,

(c) the health and safety of workers on the project is protected"

END OF DOCUMENT

1 ***Bid* to:**

Municipality of Casselman
751 St-Jean Street, Casselman Ontario
K0A 1M0 (herinafter *"Owner"*)

2 ***Bid***

.1 I/we, _____
(herinafter *"Contractor"*)

of: _____

_____

_____
(insert here the *Bidder's* full legal address for notices and/or contractural purposes)

having examined the site and conditions prevailing, agree, for the following stipulated price, to supply all necessary labour, materials, plant, equipment and services for the execution and completion of : _____ *(state work that will be provided)* in accordance with the *Contract Documents*, including all addenda thereto which are acknowledged hereinafter, for the construction of:

volunteer fire fighter's equipment, training and monitoring service facility at 745 Brebeuf St., Casselman, Ontario, K0A 1M0

for the all-inclusive sum, not including GST, of

_____

Dollars ($_____) in lawful Money of Canada.

3 **Allowances**

.1 The *Bid Price* includes the amount of the Cash Allowances specified in Section 01 21 10 "Cash Allowances". GST is not included in these Allowances.

4 **Completion Date**

.1 I/we agree to achieve substantial performance of the Work within the proposed time line was determins to complete the work once receipt of a letter of acceptance of my/our *Bid*.

5 **Security Deposit**

.1 I/we enclose herewith a Bid Bond or a certified cheque in an amount of not less than 5% of the Bid Price, payable to the Municipality of Casselman

6 **Consent of Surety**

.1 I/we enclose herewith a letter from a Surety Company, certifying that I/we can obtain the Labour and Material Payment Bonds required by the *Bid Documents*, if successful in obtaining the *Contract*.

7 Addenda

.1 I/we hereby acknowledge receipt of the following *Addenda* issued to me/us during the *Bidding Period*:

No._____ Dated _____	No._____ Dated _____
No._____ Dated _____	No._____ Dated _____
No._____ Dated _____	No._____ Dated _____
No._____ Dated _____	No._____ Dated _____
No._____ Dated _____	No._____ Dated _____
No._____ Dated _____	No._____ Dated _____

8 Supplements to *Bid*

.1 The supplementary information called for in the *Bid Documents* to be submitted with the *Bid* is provided on the *Supplements to Bid* to be submitted by the time stipulated on the forms.

.2 I/we agree that, if requested, I/we will provide, within twenty four (24) hours of *Bid Closing*, the additional supplementary bid information called for in the *Bid Documents*. I/we further agree that this information will form an integral part of this *Bid*.

9 No Collusion

.1 I/we declare that I/we have arrived at this *Bid* without collusion with any competitor.

10 Duration of Offer

.1 My/our *Bid* shall remain open for acceptance and shall be irrevocable for a period of sixty days after the date of *Bid Closing*.

11 Execution of the *Contract*

.1 I/we are in a position to commence the *Work* immediately upon execution of the *Contract Documents* or upon being in receipt of a formal instruction from the *Owner* to proceed.

.2 If I/we are notified of the acceptance of my/our *Bid*, I/we will execute a *Contract* Agreement on the Canadian Standard Construction Document 2, Stipulated Price Contract, 2008 Edition, duly completed and modified to conform with the *Bid Documents* and this *Bid Form*.

12 *Contractor's* Signature)

CONTRACTOR'S SIGNATURE	)	
or, if the *Bid* is submitted	)	
by an incorporated company,	)	*SEAL*
its seal attested by the hands	)	
of its proper officers	)	
	)_____	

Dated at, _____, this _____ day of _____, 20_____

13 Confirmation

We, _____
(Company Name)
of _____
(Business Address)

have fully inspected the Site and examined all the conditions affecting the Work. We have also carefully examined all documents prepared for this Contract including Addenda thereto; and thereby offer to furnish all material, installation, labour and equipment for the proper completion of the entire Work; in accordance with the foregoing Drawings, Specifications and Addenda for the Sum as indicated in Section 2. Bid.

Mailing Address: _____

_____

_____

Telephone: _____
Fax: _____
E-Mail: _____

END OF DOCUMENT

1 Submission

.1 The Contractor shall complete and submit this list within 24 hours of bid closing.

.2 Where work is to be executed by the Contractor's own forces, so indicate.

2 Principal Subcontractors

.1 The following is a list of the Principal subcontractors I/we propose to use. I/we have worked with these subcontractors and/or have verified their credentials and are satisfied that they can fully meet the requirements of the contract documents.

.2 I/we have carefully checked the Specifications and Addenda and have included, thereafter, only those Subcontractors, suppliers or items who/which are permitted in the Specification or Addenda:

02 22 20 Demolition _____

07 84 00 Fire Stopping _____

08 11 13 Hollow Steel Doors and Frames _____

08 14 16 Flush Wood Doors _____

08 71 10 Door Hardware _____

08 80 50 Glazing _____

08 87 00 Architectural Window Film _____

09 22 16 Metal Framing _____

09 25 00 Gypsum Board _____

09 30 13 Acoustic Ceilings and Suspension System _____

09 30 13 Ceramic Tile _____

09 84 13 Acoustical Wall Panels/ Tiles _____

09 91 21 Painting _____

MECHANICAL and ELECTRICAL:

Division 21 - Fire Suppression _____

Division 23 - HVAC _____

Division 26 - Electrical _____

Division 27 - Communications _____

Division 28 - Electronic Safety and Security _____

Bidder _____ Signature _____

END OF DOCUMENT

1 FORM OF AGREEMENT

.1 Form of Agreement which the successful Tenderer will be required to execute is the Standard Construction Document, CCDC 2, 2008 - Stipulated Price Contract.

.2 This form of Agreement was prepared by The Canadian Construction Documents Committee and can be obtained from the Ottawa Construction Association, 9 Antares Dr, Nepean, ON K2E 7V5, Ontario.

2 GENERAL CONDITIONS

.1 The General Conditions of CCDC 2, 2008, Articles GC 1.1 to GC 12.3, inclusive, shall govern the work of the Contract.

.2 The Definitions forming part of CCDC 2 in Document 00 73 00 are hereby made a part of these Documents to the same extent as if bound herein.

.3 Supplementary General Conditions to CCDC 2 in Document 00 73 00 shall apply to the work of this project.

3 STATUTORY DECLARATIONS

.1 The Statutory Declarations that the Contractor will be required to submit during the duration of the Work are:
- .1 CCDC 9A, 2001 - Statutory Declaration
- .2 CCDC 9B, 2001 - Statutory Declaration

END OF DOCUMENT

PART 1 - GENERAL

1.1 INTRODUCTION

.1 The following Supplementary Conditions modify, change, delete from or add to the Articles of Agreement, the Definitions, and the General Conditions of the Stipulated Price Contract, Standard Construction Document CCDC2, 2008

.2 Where any Article, Definition, General Condition, paragraph, subparagraph or clause thereof is modified or deleted by these Supplementary Conditions, the unaltered provisions of that Article, Definition, General Condition paragraph, subparagraph or clause shall remain in effect

.3 Where a General Condition or paragraph of the General Conditions of the Stipulated Price Contract is deleted by these Supplementary Conditions, the numbering of the remaining General Conditions or paragraphs shall remain unchanged, and the numbering of the deleted item will be retained, unused

.4 All references within these documents, to the “Ontario Construction Lien Act” or “Construction Lien Act” or the like, refers to the most recent legislation that was passed on July 1, 2018, in which, the Ontario Construction Lien Act has become the Construction Act (the “Act”).

1.2 MODIFICATIONS TO ARTICLES

.1 **ARTICLE A-3 – CONTRACT DOCUMENTS**

.1 Amend paragraph A-3.1 to add the following after the words, “The General Conditions of the Stipulated Price Contract”

“- These Supplementary General Conditions
- The Specific Conditions, if any
- Drawings
- Specifications”

.2 **ARTICLE A-5 -PAYMENT**

.1 Delete paragraph 5.3 – Interest, in its entirety.

.3 **ARTICLE A-6 – RECEIPT AND ADDRESSES FOR NOTICES IN WRITING**

.1 Amend paragraph 6.1, by deleting the words, "or by facsimile" in the second sentence, the words, "facsimile, or other form of" in the fourth sentence, and the words, "facsimile number" wherever they appear:

1.3 MODIFICATIONS TO DEFINITIONS

.1 **DEFINITIONS**

.1 Add a new Definition, “*Act*” as follows:

“***Act***

Act means the *Construction Act* (Ontario), as amended.”

.2 Add a new Definition, “*As-Built Drawings*” as follows:

“***As-Built Drawings***

As-Built Drawings means drawings prepared by the Contractor by marking on a copy of the Drawings the changes from the Drawings which occur during construction including, but are not limited to the exact location of major building components that were shown generally on the Drawings.”

.3 Add a new Definition, “*Confidential Information*” as follows:

“***Confidential Information***

Confidential Information means all the information or material of the *Owner* that is of a proprietary or

confidential nature, whether it is identified as proprietary or confidential or not, including but not limited to information and material of every kind and description (such as drawings and move-lists) which is communicated to or comes into the possession or control of the *Contractor* at any time, but *Confidential Information* shall not include information that

.1 is or becomes generally available to the public without fault or breach on the part of the *Contractor*, including without limitation breach of any duty of confidentiality owed by the *Contractor* to the *Owner* or to any third party, but only after that information becomes generally available to the public

.2 the *Contractor* can demonstrate to have been rightfully obtained by the *Contractor* from a third party who had the right to transfer or disclose it to the *Contractor* free of any obligation of confidence;

.3 the *Contractor* can demonstrate to have been rightfully known to or in the possession of the *Contractor* at the time of disclosure, free of any obligation of confidence; or

.4 is independently developed by the *Contractor* without use of any *Confidential Information*."

.4 Add a new Definition, "*OSHA*" as follows:

"***OSHA***

OSHA means the *Ontario Health and Safety Act* (Ontario), as amended."

.5 Add a new Definition, "*Personal Information*" as follows:

"***Personal Information***

Personal Information means personal information as that term is defined in subsection 2(1) of the *Freedom of Information and Protection of Privacy Act*, and includes personal health information as that term is defined in subsection 2(1) of the *Personal Health Information Protection Act* which definitions extend to individual's name, address, age, date of birth, sex, and religion, and any and all personal health information of an individual, whether recorded in printed form, on film, by electronic means, or otherwise."

.6 Add a new Definition, "*Proper Invoice*" as follows:

"***Proper Invoice***

Proper Invoice means an invoice that complies with the requirements of the Construction Act and also a includes the following"

.1 a breakdown of the invoice amount by trade or division as required by the specifications,

.2 an updated schedule in a form and level of detail acceptable to the owner showing the percentage complete on each task,

.3 a Workplace Safety and Insurance Board clearances showing current coverage.

.4 a Statutory Declaration in the form of CCDC 9A 2018 (for every invoice after the first invoice)"

.7 Add the following definition:

"**Submittals**

Submittals are documents or items required by the *Contract Documents* to be provided by the *Contractor,* such as:

- Shop Drawings, samples, models, mock-ups to indicate details or characteristics, before the portion of the Work that they represent can be incorporated into the Work; and
- Record drawings and manuals to provide instructions to the operation and maintenance of the *Work*."

.8 Add a new Definition, "*WSIB*" as follows:

"***WSIB***

WSIB means the *Workplace Safety and Insurance Board."*

.9 Add a new Definition, "*Daily Work Records*" as follows:

"***Daily Work Records***

Daily Work Records mean daily records detailing the number and categories of workers and hours worked or on standby, types and quantities of *Construction Equipment*, and descriptions and quantities of *Product* utilized."

1.4 MODIFICATIONS TO GENERAL CONDITIONS

.1 **GC 1.1 CONTRACT DOCUMENTS**

.1 Add to the end of subparagraph 1.1.2.2

"……Except where the *Consultant* shall be indemnified as a third party beneficiary as provided in subparagraphs 9.2.7.4, 9.2.8.4, 9.5.2.4 and 9.5.3.4 and in 12.1.1."

.2 Delete 1.1.6 in its entirety and substitute the following:

"1.1.6 The *Specifications* are divided into divisions and sections for convenience but shall be read as a whole and neither such division nor anything else contained in the *Contract Documents* will be construed to place responsibility on the *Owner* or the *Consultant* to settle disputes among the *Subcontractors* and *Suppliers* with respect to such divisions. The *Drawings* are, in part, diagrammatic and are intended to convey the scope of the *Work* and indicate general and appropriate locations, arrangements and sizes of fixtures, equipment and outlets. The *Contractor* shall obtain more accurate information about the locations, arrangements and sizes from study and coordination of the *Drawings*, including *Shop Drawings* and shall become familiar with conditions and spaces affecting those matters before proceedings with the *Work*. Where site conditions require reasonable minor changes in indicated locations and arrangements, the *Contractor* shall make such changes at no additional cost to the *Owner*. Similarly, where known conditions or existing conditions interfere with new installation and require relocation, the *Contractor* shall include such relocation in the *Work*. The *Contractor* shall arrange and install fixtures and equipment in such a way as to conserve as much headroom and space as possible. The schedules are those portions of the *Contact Documents*, wherever located and whenever issued, which compile information of similar content and may consist of drawings, tables and/or lists.

.3 Delete 1.1.7.1 in its entirety and substitute the following:

"1.1.7.1 If there is a conflict within the Contract Documents, the order of priority of documents, from highest to lowest, shall be.

- any amendment to the Agreement between the Owner and the Contractor.
- The Agreement between the Owner and the Contractor, as amended by these Supplementary General Conditions
- The Definitions
- Specific Conditions
- Supplementary Conditions
- The General Conditions
- Division 1 of the Specifications,
- Technical Specifications,
- Material and finishing Schedules.

.4 Add new subparagraphs 1.1.7.5 thru 1.1.7.10 as follows:

"1.1.7.5 In case of discrepancies, noted materials and annotations shall take precedence over graphic indications in the *Contract Documents.*

1.1.7.6 Finishes in the room finish schedules shall govern over those shown on the *Drawings*

1.1.7.7 Schedules of Division 01 – General Requirements of the *Specifications* shall form part of and be read in conjunction with the technical specification section as listed in the table of contents of the *Specifications*

1.1.7.8 Architectural drawings shall have precedence over structural, plumbing, mechanical, electrical and landscape drawings insofar as outlining, determining and interpreting conflicts over the required design intent of all architectural layouts and architectural elements of construction, it being understood that the integrity and installation of the systems designed by the *Consultant* or its sub-*Consultants* are to remain with each of the applicable drawing disciplines.

1.1.7.9 Should reference standards contained in the *Specifications* conflict with the *Specifications,* the *Specifications* shall govern. Should reference standards and *Specifications* conflict

with each other or if certain requirements of the *Specifications* conflict with other requirements of the *Specifications*, the more stringent requirements shall govern.

.5 Delete 1.1.8 in its entirety and substitute the following:

"1.1.8 The *Contractor* shall be responsible to provide all printed copies of the *Contract Documents* that may be necessary and or required to perform the *Work,* submit for permit and provide as builts. At the completion of the work the *Contractor* be held responsible to collect and destroy all copies not turned over to the Owner, used for permits or contracts."

.2 **GC 2.2 ROLE OF THE CONSULTANT**

.1 Add new paragraph 2.2.0 as follows:

"2.2.0 The *Consultant* is not signatory to, is not party to, "*the Agreement"* between the *Owner* and the *Contractor*, and as such is not bound by any conditions or requirements as stated therein. The *Owner* and the *Contractor* shall indemnify and save harmless the *Consultant* from any claims arising from a disagreement between the two signatory parties."

.2 Amend paragraph 2.2.3 by deleting the second sentence therof.

.3 Delete paragraph 2.2.4. in its entirety

.4 Add the word "schedules" after the word "techniques" in paragraph 2.2.6.

.5 Add to the end of the second sentence of paragraph 2.2.6. "…..or to adhere to the construction schedule"

.6 Add at the end of paragraph 2.2.9. "The *Owner* and the *Contractor* shall waive any claims against the *Consultant* arising out of the making of such interpretations and findings in accordance with paragraphs 2.2.7., 2.2.8. and 2.2.9".

.7 Add new sentence to end of paragraph 2.2.11 "The Consultant's obligation to make findings on a large claim or large number of claims is subject to the terms and conditions of the Owner/Consultant agreement."

.8 Amend paragraph 2.2.13 by the addition of the following to the end of that paragraph:

"……..If, in the opinion of the *Contractor*, the *Supplemental Instruction* involves an adjustment in the *Contract Price* or in the *Contract Time*, it shall, within ten (10) *Working Days* of receipt of a *Supplemental Instruction*, provide the *Consultant* with a notice in writing to that effect. Failure to provide written notification within the time stipulated in this paragraph 2.2.13 shall be deemed an acceptance of the *Supplemental Instruction* by the *Contractor*, without any adjustment in the *Contract Price* or *Contract Time."*\

.9 Delete the comma after the word "submittals" and add the words "which are provided" before the words "in accordance" in paragraph 2.2.14.

.10 Delete paragraph 2.2.16 in its entirety and replace it with the following:

"2.2.16 The *Contractor* shall complete the deficiency review of the *Work*, and provide detailed results of the review prior to requesting a Substantial Performance Inspection of the *Consultant.* Then the *Consultant* and *Contractor* will jointly conduct reviews of the *Work* to determine *Substantial Performance of the Work* and completion of the *Work* as provided in GC 5.4 SUBSTANTIAL PERFORMANCE OF THE WORK and GC 5.7 – FINAL PAYMENT. The Consultant will issue a Certificate of Substantial Performance if, in their sole opinion, meets the requirements."

.3 **GC 2.3 REVIEW AND INSPECTION OF THE WORK**

.1 Delete paragraph 2.3.3 in its entirety and replace it with the following:

"2.3.3 The *Contractor* shall furnish copies to the *Consultant* and *Owner* of all certificates and inspection reports relating to the *Work*."

.2 Insert the word "review" after the word "inspections" in the first line of paragraph 2.3.4.

.3 Add a new paragraph 2.3.8 as follows:

"2.3.8 The *Consultant* will conduct periodic reviews of the *Work* in progress, to determine general conformance with the requirements of the *Contract Documents*. Such reviews, or lack thereof, shall not give rise to any claims by the *Contractor* in connection with

construction means, methods, techniques, sequences and procedures, nor in connection with construction safety at the *Place of Work*, responsibility for which belongs exclusively to the *Contractor."*

.4 **GC 2.4 DEFECTIVE WORK**

.1 Amend paragraph 2.4.1. by adding the following at the end, "at no additional cost to the *Owner*."

.2 Add new subparagraphs 2.4.1.1 and 2.4.1.2:

"2.4.1.1 The *Contractor* shall rectify, in a manner acceptable to the *Owner* and the *Consultant*, all defective work and deficiencies throughout the *Work*, whether or not they are specifically identified by the *Consultant*."

"2.4.1.2 The *Contractor* shall prioritize the correction of any defective work which, in the sole discretion of the *Owner*, adversely affects the day to day operation of the Owner."

.5 **GC 3.1 CONTROL OF THE WORK**

.1 Add the word "schedules" after the word "techniques" in paragraph 3.1.2.

.2 Add new paragraph 3.1.3:

"3.1.3 Prior to commencing individual procurement, fabrication and construction activities, the Contractor shall verify, at the Place of the Work, all relevant measurements and levels necessary for proper and complete fabrication, assembly and installation of the Work and shall further carefully compare such field measurements and conditions with the requirements of the *Contract Documents*. Where dimensions are not included or exact locations are not apparent, the *Contractor* shall immediately notify the *Consultant* in writing and obtain written instructions from the *Consultant* before proceeding with any part of the affected work."

.6 **GC 3.3 TEMPORARY WORK**

.1 In paragraph 3.3.2, in the second line after the words "where required by law", insert "or the *Consultant*".

.7 **GC 3.4 DOCUMENT REVIEW**

.1 Delete paragraph 3.4.1 in its entirety and substitute new paragraph 3.4.1:

"3.4.1 The Contractor shall review the Contract Documents and shall report promptly to the Consultant any error, inconsistency or omission the Contractor may discover. Such review by the Contractor shall comply with the standard of care described in paragraph 3.14.1 of the Contract. Except for its obligation to make such review and report the result, the Contractor does not assume any responsibility to the Owner or to the Consultant for the accuracy of the Contract Documents. The Contractor shall not be liable for damage or costs resulting from such errors, inconsistencies, or omissions in the Contract Documents, which the Contractor could not reasonably have discovered. I f the Contractor does discover any error, inconsistency or omission in the Contract Documents, the Contractor shall not proceed with the work affected until the Contractor has received corrected or missing information from the Consultant."

.2 Add new paragraph 3.4.2 as follows:

"3.4.2 If the Contractor finds discrepancies in and/or omissions from the *Contract Documents* or has any doubt as to the meaning or intent of any part thereof, the *Contractor* shall immediately notify the *Consultant*, who will provide written instructions or explanations. Neither the *Owner* nor the *Consultant* will be responsible for oral instructions"

.8 **GC 3.6 SUPERVISION**

.1 Amend paragraph 3.6.1 by adding the following after the words, "competent representative", "who shall be a Competent Person, as that term is defined in the Occupational Health and Safety Act,", and by deleting the last sentence, and replacing it with the following, "The *Contractor* shall not be entitled to change the Competent Person without the prior written authorization of the *Owner*, which shall not be unreasonably withheld."

.9 **GC 3.7 SUBCONTRACTORS AND SUPPLIERS**

.1 Add to paragraph 3.7.1.1 add to the end of the second line
"……...including any warranties and service agreements which extend beyond the term of the *Contract*."

.2 Add to subparagraph 3.7.1.2 after the words "the *Contract Documents*" insert the words "including any required surety bonding"

.10 **GC 3.8 LABOUR AND PRODUCTS**

.1 Delete paragraph 3.8.2 and substitute with the following:
"3.8.2 *Products* provided shall be new and shall conform to all current applicable specifications of the Canadian Standards Association, Canadian Standards Board or General Standards Board, ASTM, National Building Code, provincial and municipal building codes, fire safety standards, and all governmental authorities and regulatory agencies having jurisdiction at the *Place of the Work*, unless otherwise specified. *Products* which are not specified shall be of a quality consistent with those specified and their use acceptable to the *Consultant*. Specified *Products* shall not be substituted with another product without the express written consent of the Consultant."

.2 Amend paragraph 3.8.3 by adding the words, "…, agents, *Subcontractors* and *Suppliers*…" after the word "employees" in the first line

.3 Add new paragraph 3.8.4 and 3.8.5 as follows:
"3.8.4 The Contractor is responsible for the safe on-site storage of Products and their protection (including Products supplied by the Owner and other contractors to be installed under the Contract) in such ways as to avoid dangerous conditions or contamination to the *Products* or other persons or property and in locations at the *Place of the Work* to the satisfaction of the *Owner* and the *Consultant*. The *Owner* shall provide all relevant information on the *Products* to be supplied by the *Owner*."
3.8.5 The cost for overtime required beyond the normal *Working Day* to complete individual construction operations of a continuous nature, such as pouring or finishing of concrete or similar work, or *Work* that the *Contractor* elects to perform at overtime rates without the *Owner* requesting it, shall not be chargeable to the *Owner"*

.11 **GC 3.10 SHOP DRAWINGS**

.1 Add the words "AND OTHER SUBMITTALS" to the Title after SHOP DRAWINGS

.2 Add "and Submittals" after the words "Shop Drawings" in paragraphs 3.10.1, 3.10.2, 3.10.4, 3.10.7, 3.10.8, 3.10.8.2, 3.10.9, 3.10.10, 3.10.11, and 3.10.12.

.3 Delete 3.10.3 in its entirety and substitute new paragraph 3.10.3
"3.10.3 The Contractor shall prepare a schedule of the dates for provision, review and return of Shop Drawings and Submittals and submit it to the Consultant for review."

.4 Delete paragraph 3.10.9 in its entirety and substitute the following:
"3.10.9 At the time of providing *Shop Drawings*, the *Contractor* shall advise the *Consultant* in writing of any deviations in *Shop Drawinsg* from the requirements of the *Contract Documents*. The *Consultant* shall indicate the acceptance of such deviation expressly in writing. Where manufacturers' literature is submitted in lieu of scaled drawings, it shall be clearly marked in ink, to indicate the specific items for which review is requested"

.5 Delete the words "so as to cause no delay in the performance of the Work" in paragraph 3.10.12

.6 Add new paragraphs 3.10.13 as follows
"3.10.13Reviewed *Shop Drawings* shall not authorize a change in the *Contract Price* and/or the *Contract Time"*

.12 **GC 3.13 CLEAN-UP**

.1 Add new paragraphs 3.13.4 as follows:
"3.13.4 In the event that the *Contractor* fails to remove waste and debris as provided in this GC 3.13, then the *Owner* or the *Consultant* may give the *Contractor* twenty-four (24) hours written notice to meet its obligations respecting clean up. Should the *Contractor* fail to

meet its obligations pursuant to this GC 3.13 within the twenty-four (24) hour period next following delivery of the notice, the *Owner* may remove such waste and debris and deduct from payments otherwise due to the *Contractor*, the *Owner's* costs for such clean up, including a reasonable mark-up for administration costs."

.13 **GC 3.14 PERFORMANCE BY CONTRACTOR**

.1 Add new General Condition 3.14 PERFORMANCE BY CONTRACTOR and new paragraphs 3.14.1 and 3.14.2 as follows

"3.14.1 In performing its services and obligations under the *Contract*, the *Contractor* shall exercise a standard of care, skill and diligence that would normally be provided by an experienced and prudent contractor supplying similar services for similar projects. The *Contractor* acknowledges and agrees that throughout the *Contract*, the *Contractor's* obligations, duties and responsibilities shall be interpreted in accordance with this standard. The *Contractor* shall exercise the same standard of due care and diligence in respect of any Products, personnel, or procedures which it may recommend to the *Owner*."

"3.14.2 The *Contractor* further represents, covenants and warrants to the Owner that:

.1 The personnel it assigns to the Project are appropriately experienced.

.2 It has a sufficient staff of qualified and competent personnel to replace its designated supervisor and project manager, subject to the Owner's approval, in the event of death, incapacity, removal or resignation."

.14 **GC 4.1 CASH ALLOWANCES (if applicable to Contract)**

.1 Delete the second sentence in paragraph 4.1.1

.2 Delete paragraph 4.1.4 in its entirety and substitute new paragraph 4.1.4:

"4.1.4 Where the actual cost of the Work under any cash allowance exceeds the amount of the allowance, any unexpended amounts from other cash allowances shall be reallocated, at the *Consultant's* direction, to cover the shortfall, and, in that case, there shall be no additional amount added to the Contract Price for overhead and profit. Only where the actual cost of the *Work* under all cash allowances exceeds the total amount of all cash allowances shall the *Contractor* be compensated for the excess incurred and substantiated, plus an amount for overhead and profit on the excess only, as set out in the *Contract Documents*."

.3 Delete paragraph 4.1.5 in its entirety and substitute new paragraph 4.1.5:

"4.1.5 The net amount of any unexpended cash allowances, after providing for any reallocations as contemplated in paragraph 4.1.4, shall be deducted from the *Contract Price* by *Change Order* without any adjustment for the *Contractor's* overhead and profit on such amount."

.4 Delete paragraph 4.1.7 in its entirety and substitute new paragraph 4.1.7.

"4.1.7. The *Contractor* shall prepare a schedule that shows when the Owner must authorize ordering of items called for under cash allowances to avoid delaying the progress of the work."

.5 Add new paragraph 4.1.8:

"4.1.8 The *Owner* reserves the right to call, or to have the *Contractor* call, for competitive bids for portions of the Work, to be paid for from cash allowances."

.15 **GC 5.2 APPLICATIONS FOR PROGRESS PAYMENT**

.1 Amend paragraph 5.2.1. by adding the following at the end thereof:

"The *Contractor* shall submit their application, or *Proper Invoice*, to both the *Consultant* and the *Owner*."

.2 Revise article 5.2.3 to read as follows:

"5.2.3 The amount claimed shall be for the value, proportionate to the amount of the *Contract*, of *Work* performed, and *Products* delivered to the *Place of the Work* as of the last day of the payment period. No amount claimed shall include products delivered and

incorporated into the work, unless the products are free and clear of all security interests, liens and other claims of third parties."

.3 Amend paragraph 5.2.4 by deleting the words "calendar days" and preplacing them with "Working Days".

.4 Amend paragraph 5.2.7 by adding the following at the end thereof:
"Any *Products* delivered to the *Place of Work* but not yet incorporated into the *Work* shall remain tat the risk of the *Contractor* notwithstanding that tile has passed to the *Owner* pursuant to GC 13.1 OWNERSHIP OF MATERIALS."

.5 Add new article 5.2.8 as follows:
"5.2.8 The second and all subsequent applications for payment shall be accompanied by a *WSIB* clearance certificate and Statutory Declaration, executed by the *Contractor*, in the form acceptable to the *Owner.*"

.6 Add new article 5.2.9 as follows:
"5.2.9 As "as-built" item shall be identified on the cost breakdown with all corresponding fair and reasonable value for the purpose of ensuring that the as-built information drawings are given due diligence."

.16 **GC 5.3 PROGRESS PAYMENT**

.1 Delete sub-paragraph 5.3.1.1 in its entirety.

.2 Revise sub-paragraph 5.3.1.2 as follows: After the words "issue to the *Owner*" delete "and copy to the *Contractor*". After the words "after the receipt of the" add "complete":

.3 Delete paragraph 5.3.1.3 in its entirety and substitute new paragraph 5.3.1.3. as follows:
"5.3.1.3 the Owner shall make payment to the Contractor on account as provided in Article A-5 of the Agreement - PAYMENT on or before 28 calendar days after receipt of a Proper Invoice."

.17 **GC 5.4 SUBSTANTAIL PERFORMANCE OF THE WORK**

.1 Delete paragraph 5.4.3 in its entirety and substitute new paragraph 5.4.3.
"5.4.3 Immediately prior to the issuance of the certificate of *Substantial Performance of the Work*, the *Contractor*, in consultation with the *Consultant,* shall establish reasonable dates for finishing the *Work* and correcting deficiencies."

.2 Add new paragraph 5.5.4, 5.5.6, 5.5.7, 5.5.8 and 5.5.9:
"5.4.4 Within 7 calendar days of receiving a copy of the certificate of Substantial Performance of the Work signed by the Consultant, the Contractor shall publish a copy of the certificate in a construction trade newspaper (as that term is defined in the Construction Lien Act) and shall provide to the Consultant and the Owner the date of publication and the name of the construction trade newspaper in which the publication occurred. If the Contractor fails to comply with this provision, the Owner may publish a copy of the certificate and charge the Contractor with the costs so incurred.
5.4.5 Prior to submitting its written application for Substantial Performance of the Work, the Contractor shall submit to the Consultant all:
.1 guarantees
.2 warranties;
.3 certificates;
.4 testing and balancing reports;
.5 distribution system diagrams;
.6 spare parts;
.7 maintenance manuals;
.8 samples;
.9 existing reports and correspondence from authorities having jurisdiction in the Place of the Work;
.10 Complete as-built drawings
and other materials or documentation required to be submitted under the *Contract*, together with written proof acceptable to the *Owner* and the *Consultant* that the *Work*

has been substantially performed in conformance with the requirements of municipal, governmental, and utility authorities having jurisdiction in the *Place of the Work*.

5.4.6 Where the *Contractor* is unable to deliver the documents and materials described in paragraph 5.4.5, then, provided that none of the missing documents and materials interferes with the use and occupancy of the *Project* in a material way, the failure to deliver shall not be grounds for the *Consultant* to refuse to certify *Substantial Performance of the Work*. If the *Contractor* fails to deliver any of the documents or materials required described in paragraph 5.4.5 the *Consultant* shall retain from payments otherwise owing to the *Contractor* under this *Contract* the amount described in paragraph 5.4.7 and retain such amount until such documents and materials are delivered

5.4.7 The amount to be retained by the *Consultant* as contemplated in subparagraphs 5.2.10 and 5.4.6 is as follows:

.1 where the Contract Price is less than $100,000 the amount to be retained is $5,000;
.2 where the Contract Price is greater than $100,000 but less than $500,000, the amount to be retained is 5% of the Contract Price; and
.3 where the Contract Price is greater than $500,000 but less than $5,000,000, the amount to be retained is the greater of $25,000 or 3% of the Contract Price.

5.4.8 Should the *As-Built Drawings* not be delivered in accordance with subparagraph 5.2.10 or any documents or materials not be delivered in accordance with paragraph 5.4.5 by the earlier of 60 days following publication of the certificate of Substantial Performance of the Work and the submission of the Contractor's application for final payment under paragraph 5.7.1 of General Condition 5.7 – FINAL PAYMENT, then the amount previously retained pursuant to paragraph 5.2.10 or 5.4.7 may be used by the *Owner* to defray the cost of preparing or replacing the documents or materials, or *As-Built Drawings* which the contractor failed to deliver

5.4.9 Together with the submission of its written application for *Substantial Performance of the Work*, the *Contractor* shall submit to the *Consultant* and to the *Owner* a statutory declaration setting forth in reasonable detail any then outstanding and unresolved disputes or claims between the *Contractor* and any *Subcontractor* or *Supplier,* including any claims allegedly arising from delay, which are, directly or indirectly, related to any then outstanding or anticipated disputes or claims between the *Contractor* and the *Owner,* and this disclosure shall, at a minimum

.1 identify the parties involved;
.2 identify the amount in dispute;
.3 provide a brief statement summarizing the position of each party;
.4 include copies of any correspondence or documents in support of either party's position;
.5 include copies of any documents of any court or arbitration process related to the matter;
.6 identify the dispute or claim between the Contractor and the Owner to which the matter relates; and
.7 include a copy of any written agreement or a summary of any oral agreement between the parties related to resolution of the matter.

The disclosure requirements detailed herein are of a continuing nature and survive completion of the *Work*. Accordingly, the *Contractor* shall supplement the information provided with the original statutory declaration with additional materials pertaining to new or existing disputes or claims, as they become available."

.18 **GC 5.5 PAYMENT OF HOLDBACK UPON SUBSTANTIAL PERFORMANCE OF THE WORK**

.1 Add new subparagraph 5.5.1.3
"5.5.1.3 submit a statement that no written notices of lien have been received by it."

.2 Amend paragraph 5.5.2 by deleting the words "and the statement" from line 1, and adding the

following at the end of the paragraph:
"The Substantial Performance Statutory holdback Release Payment Certificate will be a payment certificate releasing the Contractor the statutory holdback due in respect of the Work performed up to the date of the Substantial Performance of he Word. Payment of such statutory holdback shall be due 61 days after the date of publication of the Certificate of Substantial Performance but subject to the provisions of the *Act* and subject to GC 5.5.4."

.19 **GC 5.7 FINAL PAYMENT**

.1 Delete from the first line of paragraph 5.7.2 the words, "calendar days" and substitute the words "*Working Days*".

.2 Delete from the second line of paragraph 5.7.4 the words, "…5 calendar days after the issuance…" and substitute the words "…28 calendar days after receipt of a *Proper Invoice*…"

.3 Add new paragraph 5.7.5

"5.7.5 Prior to the release of the finishing holdback provided for under the Construction Lien Act, the Contractor shall submit:

.1 Contractor's written request for release of the finishing holdback, including a statement that no written notices of lien have been received by it;

.2 a Statutory Declaration CCDC 9A-2001;

.3 a final Workplace Safety & Insurance Board Clearance of Certificate."\

.11 GC 6.1 CHANGES

.1 Add the following:

6.1.3 No changes in or additions to the Work shall be undertaken without written authorization of the Owner.

6.1.4 Where additional instructions provided by the Owner or the Consultant to the Contractor result in increased costs, the Contractor shall not be entitled to any reimbursement by the Owner for such costs unless the Contractor provides the Consultant with written notice of the increased costs within fifteen (15) Business Days of receiving the above instructions.

6.1.5 The valuation of any Changes shall be determined, at the Owner's discretion, by one or more of the following methods:

(a) Estimate and acceptance in a lump sum, subject to back-up documentation by the Contractor and verification by the Consultant;
(b) By the cost and a fixed or percentage fee; or
(c) Unit prices.

6.1.6 Where Changes are to be paid for under GC 6.1.5(b), the cost to the Owner shall be the actual cost of the Work plus a percentage covering overhead and profit on additional work only, after all credits included in the Change have been deducted, as follows:

(a) for work to be completed by the Contractor's own forces, a mark-up on the actual cost of 15% (10% for overhead and 5% for profit);
(b) for work to be completed by the forces of a Sub-contractor or Supplier, a mark-up on the actual cost of 10% for the Contractor and 15% (10% for overhead and 5% for profit) for the Subcontractor or Supplier;
(c) for deleted work, the credit is to be for the actual cost of the deletion less 5%;

(e) all Changes shall not include the (GST) Goods and Services Tax. The applicable GST shall be listed separately on all change order quotations.

6.1.7 The Contractor will maintain and keep sufficiently complete and accurate books, payrolls, accounts and records relating to the changes to Work or any extensions or additions thereto or claims arising therefrom to permit the verification and audit thereof and the Contractor will have no claim for repayment of any nature and kind whatsoever therefore, unless such books, payrolls, accounts and records have been so maintained and kept.

6.1.8 The balance of the Work of the Contractor shall not be delayed pending agreement on resolution of the valuation of Changes.

6.1.9 The costs and effect on the Contract Time of each Change shall be dealt with separately and shall be deemed to include all direct, indirect and consequential costs associated with that change, including, without limitation, all impact costs, overhead costs and profits. No other claim for additional costs shall be considered or paid by the Owner.

6.1.10 No supervision costs by the Contractor for his superintendent or foremen shall be charged on extra work which is done before the substantial completion date of the Project.

6.1.11 No extra charge shall be made for the hire of equipment for extra work if said equipment was required for the original work and the extra work can be performed in the same time period.

6.1.12 Charges for any item or items over and above the demonstrated actual costs plus the maximum percentage markups specified will not be considered by the Consultant in the valuation assessment.

6.1.13 In the computation of the value of Changes which include both extras and credits, all credits shall be deducted from the total sum of the extra before statutory charges or Overhead and Profit are added.

.20 **GC 6.2 CHANGE ORDER**

.1 Add new paragraph 6.2.3 as follows:

"6.2.3 The following mark-up shall apply to work added to the Contract

In the case of changes in the Work to be paid for by the Owner under the methods described in paragraph 6.2.2, the Contractor and Subcontractor, respectively, may add to the net cost of additional work, a fee, or markup, inclusive of overhead and profit, limited to the following:

- The General Contractor may add to the total net cost of additional work to be carried out by his own forces, a markup of Ten (10%) per cent. General Contractors are not allowed to treat their own forces as Subcontractors.
- The General Contractor may add to the net cost of additional work by a Subcontractor, a markup, of Five (5%) per cent of the net sum quoted by such Subcontractor
- Subcontractor may add to the total net cost of additional work to be carried out by his own forces, a markup of Five (5%) per cent.
- The Subcontractor may add to the net cost of additional work by a Sub-Subcontractor or Supplier, a markup, of Five (5%) per cent of the net sum quoted by such Sub-Subcontractor or Supplier

Such markup, by General Contractor and Subcontractor, respectively, shall be based on net additional cost for any one change in the Work, such net cost being derived by deducting credits for labour and materials involved in deleted work from the cost of labour and materials involved in additional work. When quantities of the same product or material are changed in the same Change in the Work, the change in the Contract Price shall be based on the net difference in quantity between the product(s) or material(s) deleted and the product(s) or material(s) added.

`Overhead' shall include any additional charges and/or premiums for **Supervision, Permits, Bonds, Insurance, Office Overhead** and the like, which may result from Changes in the Work. The cost for these items shall not be added onto any Cost for Changes prior to applying mark-up."

.2 Add new paragraph 6.2.4 and 6.2.5 as follows:

"6.2.4 All quotations submitted shall be provide with ta detailed breakdown including, but not limited to the following:

1. quantity of each material
2. unit cost of each material
3. man hours involved
4. cost per hour
5. *Subcontractor* quotations submitted listing items 1 to 4 above and item 6 below.
6. mark-up"

6.2.5 The *Owner* and the *Consultant* will not be responsible for delays to the *Work* resulting from late, incomplete or inadequately broken down valuations submitted by the *Contractor."*

.21 **GC 6.3 CHANGE DIRECTIVES**

.1 Add new paragraph 6.3.14 as follows:

"6.3.14 Limits to Overhead and Profit as listed in paragraph 6.2.3 shall apply to Change Directives."

.22 **GC 6.4 CONCEALED OR UNKNOWN CONDITIONS**

.1 Add new subparagraph 6.4.5:

"6.4.5 The Contractor confirms that, prior to bidding the Project, it carefully investigated the Place of the Work and applied to that investigation the degree of care and skill described in paragraph 3.14.1, given the amount of time provided between the issue of the bid documents and the actual closing of bids, the degree of access provided to the Contractor prior to submission of bid, and the sufficiency and completeness of the information provided by the Owner. The Contractor is not entitled to compensation or to an extension of the Contract Time for conditions which could reasonably have been ascertained by the Contractor by such careful investigation undertaken prior to the submission of the bid."

.23 **GC 6.5 DELAYS**

.1 Delete the period at the end of paragraph 6.5.1, and substitute the following words:

"……, but excluding any consequential, indirect or special damages."

.2 Delete the period at the end of paragraph 6.5.2, and substitute the following words:

"……, but excluding any consequential, indirect or special damages."

.3 Add new subparagraph 6.5.6.

"6.5.6 If the Contractor is delayed in the performance of the Work by an act or omission of the Contractor or anyone employed or engaged by the Contractor directly or indirectly, or by any cause within the Contractor's control, then the Contract Time shall be extended for such reasonable time as the Consultant may decide in consultation with the Contractor. The Owner shall be reimbursed by the Contractor for all reasonable costs incurred by the Owner as the result of such delay, including all services required by the Owner from the Consultant as a result of such delay by the Contractor and, in particular, the cost of the Consultant's services during the period between the date of Substantial

Performance of the Work stated in Article A-1 herein as the same may be extended through the provisions of these General Conditions and any later, actual date of *Substantial Performance of the Work* achieved by the *Contractor*."

.24 **GC 6.6 CLAIMS FOR A CHANGE IN CONTRACT PRICE**

.1 Delete paragraph 6.6.5. in its entirety and substitute new paragraph 6.6.5.

"6.6.5. The *Consultant's* findings, with respect to a claim made by either party will be given by *Notice in Writing* by the *Consultant* to both parties within reasonable time after receipt of the claim information noted in paragraph 6.6.3*."*

.2 Add new paragraph 6.6.7

"6.6.7 The *Owner* may make claims arising out of the costs incurred for additional services provided by the *Consultant* resulting from the *Contractor's* failure to reasonably perform the Work in accordance with the terms and conditions of the Contract, including the *Contractor's* issuance of unnecessary Requests for Information. The *Consultant* will notify the *Owner* and *Contractor* where it has been determined that additional services will be required or have been provided in order not to cause a delay. The *Owner* shall make claims based on the *Consultant's* invoices."

.25 **GC 8.1 AUTHORITY OF THE CONSULTANT**

.1 Delete last sentence of 8.1.3 and substitute the following sentence:

"If it is subsequently determined that such instructions were at variance with the *Contract Documents*, the *Owner* shall pay the *Contractor* costs incurred by the *Contractor* in carrying out such instructions which the *Contractor* was required to do beyond the requirements of the *Contract Documents*, including costs resulting from interruption of the *Work*."

.26 **GC 8.2 NEGOTIATION, MEDIATION AND ARBITRATION**

.1 Delete paragraphs 8.2.6, 8.2.7, and 8.2.8 in their entirety and substitute new subparagraph 8.2.6 and 8.2.9 as follows:

"8.2.6 When a dispute has not been resolved through negotiation or mediation, within 10 *Working Days* after the date of termination of the mediated negotiations under paragraph 8.2.5, either party may give a *Notice in Writing* to the other party and to the *Consultant* inviting the other party to agree to submit the dispute to be finally resolved by arbitration, pursuant to provisions of the *Arbitration Act, 1991*. If the other party wishes to accept the invitation to submit the dispute to arbitration, it shall so indicate by the delivery of a responding *Notice in Writing* within 10 *Working Days* of receipt of the invitation. If, within the required times, no invitation is made or, if made, is not accepted, either party may refer the dispute to the courts or to any other form of dispute resolution, including arbitration, which the parties may agree to use*."*

"8.2.9 As permitted by the Construction Act (Ontario), the parties hereby agree that an adjudication under the Construction Act (Ontario) may address more than one matter."

.27 **GC 9.1 PROTECTION OF WORK AND PROPERTY**

.1 Delete subparagraph 9.1.1.1 in its entirety and substitute new subparagraph 9.1.1.1:

"9.1.1.1 errors in the Contract Documents which the Contractor could not have discovered applying the standard of care described in paragraph 3.14.1."

.2 Delete paragraph 9.1.2 in its entirety and substitute the following new paragraph 9.1.2:

"9.1.2 Before commencing any Work, the Contractor shall determine the locations of all underground utilities and structures indicated in or reasonably determinable from the Contract Documents, or that are reasonably determinable from an inspection of the *Place of the Work* exercising the degree of care and skill described in paragraph 3.14.1."

.28 **GC 9.2 TOXIC AND HAZARDOUS SUBSTANCES**

.1 Add to paragraph 9.2.6 after the word "responsible", the following new words:

"……..or whether any toxic or hazardous substances or materials already at the Place of the

Work (and which were then harmless or stored, contained or otherwise dealt with in accordance with legal and regulatory requirements) were dealt with by the Contractor or anyone for whom the Contractor is responsible in a manner which does not comply with legal and regulatory requirements, or which threatens human health and safety or the environment, or material damage to the property of the Owner or others,"

.2 Add "and the Consultant" after the word "Contractor" in subparagraph 9.2.7.4.

.3 Add to paragraph 9.2.8 after the word "responsible", the following new words:

"……..or that any toxic or hazardous substances or materials already at the Place of the Work (and which were then harmless or stored, contained or otherwise dealt with in accordance with legal and regulatory requirements) were dealt with by the Contractor or anyone for whom the Contractor is responsible in a manner which does not comply with legal and regulatory requirements, or which threatens human health and safety or the environment, or material damage to the property of the Owner or others,"

.4 Add "and the Consultant" after the word "*Owner*" in subparagraph 9.2.8.4.

.29 **GC 9.4 CONSTRUCTION SAFETY**

.1 Add new paragraph 9.4.2. as follows:

"9.4.2 The *Contractor* shall indemnify and save harmless the *Owner*, the *Consultant,* their agents, trustees, officers, directors, employees, successors, appointees, and assigns from and against the consequences of any and all safety infractions committed by the *Contractor* under the occupational health and safety legislation in force at the *Place of the Work* including the payment of legal fees and disbursements on a substantial indemnity basis."

.30 **GC 9.5 MOULD**

.1 Add "and the Consultant" after "Owner" in subparagraph 9.5.2.4.

.2 Add "and the Consultant" after "Contractor" in subparagraph 9.5.3.4.

.31 **GC 10.1 TAXES AND DUTIES**

.1 Add new paragraph 10.1.3 as follows:

"10.1.3 Where the *Owner* is entitled to an exemption or a recovery of sales taxes, customs duties, excise taxes or *Value Added Taxes* applicable to the *Contract*, the *Contractor* shall, at the request of the *Owner*, assist with the application for any exemption, recovery or refund of all such taxes and duties and all amounts recovered or exemptions obtained shall be for the sole benefit of the *Owner*."

.32 **GC 10.2 LAWS, NOTICES, PERMITS, AND FEES**

.1 Delete from the first line of paragraph 10.2.5 the word, "The" and substitute the words:

"……Subject to paragraph 3.14.1, the".

.33 **GC 10.4 WORKERS' COMPENSATION**

.1 Delete paragraph 10.4.1 and replace with the following:

"10.4.1 Prior to commencing the *Work*, and with each and every application for payment thereafter, including the *Contractor's* application for payment of the holdback amount following *Substantial Performance of the Work* and again with the *Contractor's* application for final payment, the *Contractor* shall provide evidence of compliance with workers' compensation legislation in force at the *Place of the Work*, including payments due thereunder."

.34 **GC 12.1 INDEMNIFICATION**

.1 Add "…and the Consultant, their agents and Sub-Consultants…" after the words "…hold harmless the other…" in paragraph 12.1.1.

.35 **GC 12.3 WARRANTY**

.1 Delete from the first line of paragraph 12.3.2 the word, “The” and substitute the words: "……..Subject to paragraph 3.14.1, the…".

END OF DOCUMENT

PART 1 General

1.1 WORK COVERED BY CONTRACT DOCUMENTS

.1 Work of this Contract includes providing labour, materials, equipment, services and other related expenses for general construction of a new facility for fire fighters' equipment, training and monitoring services, at 745 Brebeuf St., Casselman, Ontario, K0A 1M0, in accordance with the Contract Documents. The building is classified as a post-disaster facility and must conform to the Post Disaster seismic design criteria as outlined on drawing S000 item D01-3 SEISMIC SYSTEM/LOADING DATA.

.2 In accepting award of this Contract, Contractor hereby reaffirms that it is fully informed regarding all conditions affecting Work including its company's provincial taxes are in good standing and further accepts to complete Work for purpose intended in accordance with Contract Documents. Contractor hereby reaffirms that it does not and will not have any conflict of interest in executing work of this Contract.

.3 Perform the role of "constructor" and be responsible for health and safety coordination for all work and subcontractors in the area of work.

1.2 CONTRACT METHOD

.1 Construct Work under single stipulated price contract.

1.3 WORK BY OTHERS

.1 Work by others which is specifically excluded from this contract but that is required to take place during the construction period includes:
  .1 Supply and installation of Furniture

.2 Co-operate with other Contractors in carrying out their respective works and carry out instructions from the Consultant.

.3 Co-ordinate work with that of other Contractors arranged by the Consultant. If any part of work under this Contract depends for its proper execution or result upon work of another Contractor, report promptly to Consultant, in writing, any factors which may interfere with proper execution of Work.

.4 Work with the Consultant to include the work by others in the construction schedule.

1.4 CONTRACTOR USE OF PREMISES

.1 Limit use of premises for Work, for storage, and for access, to allow:
  .1 Partial occupancy in ground floor tenant space.
  .2 Work by other contractors.

.2 Co-ordinate use of premises under direction of Owner Representative.

.3 Obtain and pay for use of additional storage or work areas needed for operations under this Contract.

.4 Refer to Section 01 52 00 - Construction Facilities, for temporary facilities, access roads and parking areas, traffic regulations, and utilities.

1.5 OWNER FURNISHED ITEMS

.1 A number of items are provided new or were retained from the existing fire station for reuse as part of this contract.
  .1 Bunkers

.2 Owner Responsibilities:
  .1 Inspect items jointly with Contractor.

.3 Contractor Responsibilities:
  .1 Handle products at site, including uncrating and storage.
  .2 Inspect jointly with Owner; record shortages and damaged or defective items.
  .3 Protect products from damage, and from exposure to elements.
  .4 Assemble, install, connect, adjust and finish products.
  .5 Provide installation inspections required by public authorities.
  .6 Repair or replace items damaged by Contractor or subcontractor on site (under his control).
  .7 Coordinate, organize, arrange and schedule delivery of Owner supplied items.

1.6 EXISTING SERVICES

.1 Notify Owner Representative, Consultant, and utility companies of intended interruption of services and obtain required permission.

.2 Where Work involves breaking into or connecting to existing services, carry out work at times as directed by governing authorities with minimum disturbance to pedestrian vehicular traffic and tenant operations.

.3 Provide alternative routes for personnel pedestrian and vehicular traffic.

.4 Establish location and extent of service lines in area of work before starting Work. Notify Consultant of findings.

.5 Submit schedule to and obtain approval from Owner Representative and Consultant

.6 for any shut-down or closure of active service or facility including power and communications services. Adhere to approved schedule and provide notice to affected parties.

.7 Provide temporary services when directed by Owner Representative to maintain critical building and tenant systems.

.8 Provide adequate bridging over trenches which cross sidewalks or roads to permit normal traffic.

.9 Provide any necessary safety vested flagman for the safety of the site, for any materials delivery, to and from the site.

.10 Where unknown services are encountered, immediately advise Owner Representative and confirm findings in writing.

.11 Protect, relocate or maintain existing active services. When inactive services are encountered, cap off in manner approved by authorities having jurisdiction.

.12 Record locations of maintained, re-routed and abandoned service lines.

.13 Construct barriers in accordance with municipal guidelines. Remove barriers when construction complete.

1.7 1.15 DOCUMENTS REQUIRED

.1 Maintain at job site, one copy each document as follows:
- .1 Contract Drawings.
- .2 Specifications.
- .3 Addenda.
- .4 Reviewed Shop Drawings.
- .5 List of Outstanding Shop Drawings.
- .6 Change Orders.
- .7 Other Modifications to Contract.
- .8 Field Test Reports.
- .9 Copy of Approved Work Schedule.
- .10 Health and Safety Plan and Other Safety Related Documents.
- .11 Other documents as specified.

END OF SECTION

PART 1 General

1.1 SUBSTITUTIONS DURING THE BIDDING PERIOD

.1 Generally, specific materials, products and systems are specified in the Contract Documents to provide a standard of acceptance. Except where substitutions are specifically excluded in the individual Sections of the specification, equivalent materials, products or systems by other manufacturers are acceptable as substitutions, provided that the properties and compliancy's of the substitutions meet or exceed the properties and compliancy's of the specified materials, products and systems in all respects and that items exposed to sight are of the same appearance as the specified items.

.2 Substitutions which do not satisfy the above requirements may be rejected by the Consultant. Materials, products and systems which are so rejected shall be replaced by the specified items at no cost to the Contract.

.3 In the event that, prior to closing of bids, the Bidder wishes to offer a substitution or a proposal of work, materials or methods as an alternative to those described in the Contract Documents, he shall submit a request in writing no later than the time specified herein.

.4 The request shall include the following:
- .1 A description of the proposed substitution.
- .2 In the case of materials, products or systems, a direct comparison between the properties and compliancy's of the specified materials, products or systems with the properties and compliancy's of the proposed substitution, arranged in tabular form, in the same sequence as specified in the applicable specification section or in the sequence listed in the specified manufacturer's published literature, as appropriate.
- .3 In the case of materials or products, country of manufacture.
- .4 Shop drawings, product data, and certified test results attesting to the proposed material or product equivalence.
- .5 If requested by the Consultant, a list of no less than five projects of comparable size and complexity, where the proposed substitution has been used in a similar application. Such projects shall have been in service for at least five (5) years and, where applicable, shall have been subjected to climatic conditions similar to those experienced at the location of the Project. The list shall include the name and current telephone number of the Architect or Prime Consultant for each project.

.5 The burden of proof is on the proposer. In the event that the Consultant deems the information provided with the request for approval of a substitution to be inadequate, the request may be rejected.

.6 A request constitutes a representation that the Bidder:
- .1 Has investigated proposed Product and determined that it meets or exceeds the quality level of the specified Product.
- .2 Will provide the same warranty for the Substitution as for the specified Product.
- .3 Will coordinate installation and make changes to other Work which may be required for the Work to be complete with no additional cost to the Owner. (A later claim by Bidder for an addition to Contract Price because of changes in work necessitated by use of substitutions shall not be considered).
- .4 Waives claims for additional costs or time extension which may subsequently become apparent.
- .5 Will reimburse the Owner and the Consultant for the cost of review or redesign services associated with re-approval by authorities.

.7 Substitutions will not be considered in either of the following circumstances:
- .1 When they are indicated or implied on shop drawing or product data submittals, without a separate written request having been made.
- .2 When acceptance will require revision to the Contract Documents.

.8 Where the terms "or equal", "or equivalent" or terms of similar meaning are used in the specifications, this shall not be construed as acceptance of any alternative material, product or system to those specified. The use of these terms does not relieve the Subcontractor from his responsibility to follow the procedures for approval of substitutions specified herein.

.9 When a request to substitute a Product is accepted, the Consultant will issue an Addendum to known bidders.

1.2 SUBSTITUTIONS AFTER CONTRACT AWARD

.1 No substitutions will be permitted after award of the Contract without the prior approval of the Consultant by means of a letter of acceptance of the specific substitution.

.2 In the event that the Trade Contractor wishes to offer a substitution or a proposal of work, materials or methods as an alternative to those described in the Contract Documents, he shall submit a request in writing.

.3 The request shall include the following:
- .1 Reasons for the proposed substitution.
- .2 A description of the proposed substitution.
- .3 The amount of any credit offered for the substitution.
- .4 In the case of materials, products or systems, a direct comparison between the properties and compliancy's of the specified materials, products or systems with the properties and compliancy's of the proposed substitution, arranged in a form acceptable to the Consultant.
- .5 In the case of materials or products, country of manufacture.
- .6 Shop drawings, product data, and certified test results attesting to the proposed material or product equivalence.
- .7 If requested by the Consultant, a list of no less than five projects of comparable size and complexity, where the proposed substitution has been used in a similar application. Such projects shall have been in service for at least five (5) years and, where applicable, shall have been subjected to climatic conditions similar to those experienced at the location of the Project. The list shall include the name and current telephone number of the Architect or Prime Consultant for each project.

.4 Consultant reserves the right to request such additional information as he/she deem necessary prior to acceptance or rejection of a proposed substitution.

.5 A request constitutes a representation that the Trade Contractor:
- .1 Has investigated proposed Product and determined that
  - .1 it meets or exceeds the quality level of the specified Product; or
  - .2 the request describes accurately and completely the specific ways in which it fails to meet the quality level of the specified Product.
- .2 Will provide the same warranty for the Substitution as for the specified Product.
- .3 Will coordinate installation and make changes to other Work which may be required for the Work to be complete with no additional cost to the Owner. (A later claim by Bidder for an addition to Contract Price because of changes in work necessitated by use of substitutions shall not be considered).
- .4 Waives claims for additional costs or time extension which may subsequently become apparent.
- .5 Will reimburse the Owner and the Consultant for the cost of review or redesign services associated with re-approval by authorities.

.6 When a request to substitute a Product is accepted, the Construction Manager will issue to the Trade Contractor a formal letter of acceptance.

END OF SECTION

PART 1 General

1.1 COORDINATION AND PROJECT CONTROL

.1 Coordinate the progress of the Work, progress schedules, submittals, the use of the site, temporary utilities, construction facilities and controls and the work of the various sections of the specifications to ensure the efficient and orderly installation of interdependent construction elements.

.2 Coordinate the work of the various sections having interdependent responsibilities for installing, connecting to and placing in service utilities and equipment.

.3 Coordinate space requirements, supports and the installation of mechanical and electrical work which is indicated schematically on the drawings. Follow the routing shown for pipes, ducts and conduits as closely as possible; place runs parallel with lines of the building. Utilize spaces efficiently to maximize accessibility for other installations, for maintenance and for repairs.

.4 Except where indicated otherwise, in finished areas, conceal pipes, ducts and wiring in floors, walls and ceilings. Coordinate locations of fixtures and outlets with finished elements. Before installation, inform the Consultant if there is a contradictory situation. Install as directed by the Consultant.

.5 Coordinate the completion and clean-up of the work of separate sections in preparation for Substantial Completion.

.6 After Owner occupancy of the premises, coordinate access to the site for correction of defective work and work not in accordance with the Contract Documents, to minimize disruption of the Owner's activities.

1.2 DOCUMENTS REQUIRED

.1 Maintain at the Project Site, one copy each of the following:
- .1 Contract drawings.
- .2 Specifications
- .3 Addenda
- .4 Reviewed shop drawings.
- .5 Change orders.
- .6 Other modifications to the Contract.
- .7 Field test reports.
- .8 The latest approved version of the construction schedule.
- .9 The latest edition of the Ontario Building Code and other applicable codes and regulations, c/w all revisions.
- .10 A complete set of all standards referenced in the Specifications Sections.
- .11 Manufacturers' installation and application instructions.

.2 Ensure that all trades and all subcontractors are in possession of a complete set of Contract Documents and the latest edition of all codes, regulations and standards that are applicable to their portion of the Work.

1.3 INTERFERENCE DRAWINGS

.1 When directed by the Consultant, prepare interference and equipment placing drawings to ensure that all components will be properly accommodated within the spaces provided.

.2 Where the relationship of a system with other systems is critical, prepare drawings to indicate coordination and methods of installation. Ensure that all details of equipment apparatus and connections are coordinated.

.3 Ensure that clearances required by authorities having jurisdiction and clearances for proper maintenance are indicated on the drawings.

.4 Provide all line and layout from the information provided on the Contract Drawings.

1.4 EQUIPMENT ELECTRICAL CHARACTERISTICS AND COMPONENTS

.1 Power requirements: Coordinate the Work of the individual specification sections with Division 16 to ensure the provision of required electrical power with the appropriate electrical characteristics.

.2 Wiring terminations: Provide terminal lugs to match branch circuit conductor quantities, sizes and materials indicated. Size terminal lugs to NFPA 70. Include lugs for terminal boxes.

.3 Cord and plug: Where not otherwise specified in the individual specification Sections, provide minimum 1.8 m cord and plug, including grounding connector for connection to electric wiring system.

END OF SECTION

PART 1 GENERAL

1.1 PRECONSTRUCTION MEETING

.1 Schedule a preconstruction meeting after award of Contract.

.2 Agenda:
- .1 Execution of Project Contract Agreement.
- .2 Submission of executed bonds and insurance certificates.
- .3 Distribution of Contract Documents.
- .4 Submission of List of Subcontractors, Price Breakdown, Contract Price, Unit Prices, Construction Schedule and Proposed Product List.
- .5 Designation of the personnel representing the parties in the Contract.
- .6 Procedures and processing of field decisions, submittals, substitutions, applications for payments, Proposal Change Requests, Change Orders and Contract closeout.
- .7 Scheduling.
- .8 Scheduling of activities of independent inspection and testing laboratories.
- .9 Terms of Payment and proposed cash flow for the project.
- .10 Project meeting procedures.

.3 Record minutes and distribute copies to meeting participants and affected parties not in attendance.

1.2 SITE MOBILIZATION MEETING

.1 Schedule a mobilization meeting at the Project Site, prior to Contractor occupancy. Attendance by:
- .1 The Owner
- .2 The Consultant
- .3 Specialized sub-consultants.
- .4 The Contractor
- .5 Major subcontractors.

.2 Agenda:
- .1 Use of the premises by the Contractor.
- .2 Construction facilities and controls.
- .3 Temporary facilities.
- .4 Survey and building layout.
- .5 Security and housekeeping procedures.
- .6 Construction Schedule.
- .7 Application for payment procedures.
- .8 Procedures for testing.
- .9 Procedures for maintaining record documents.
- .10 Requirements for start-up of equipment.
- .11 Inspection and acceptance of equipment put into service during the construction period.

.3 Record minutes and distribute copies to meeting participants and affected parties not in attendance.

1.3 PROGRESS MEETINGS

.1 In consultation with the Owner Representative and the Consultant, schedule a progress meeting at the Project Site, at the same time and day of the week, at one-weekly intervals, throughout the progress of the Work. By agreement, additional meetings may be held if circumstances require.

.2 Attendance required (as appropriate to agenda topics for each meeting):

.1 The Owner Representative.
.2 The Consultant
.3 Specialized sub-consultants.
.4 Contractor.
.5 Contractor's superintendent.
.6 Other contractors affected by the Work.
.7 Major subcontractors.

.3 Subcontractors and/or suppliers shall be invited only by prior agreement with the Consultant.

.4 The Contractor shall:
.1 Distribute written notices of meetings to all affected parties.
.2 Provide physical space and make arrangements for meetings.

.5 Agenda:
.1 Review of minutes of previous meetings.
.2 Review of Work progress.
.3 Field observations, problems and decisions, progress.
.4 Identification of problems which impede planned progress.
.5 Review of Schedule of Submittals and status of submittals.
.6 Review of off-site fabrication and delivery schedules.
.7 Maintenance of Progress Schedule.
.8 Corrective measures to regain projected schedules.
.9 Planned progress during succeeding work period.
.10 Coordination of projected progress.
.11 Maintenance of quality and work standards.
.12 Effect of proposed changes on the Progress Schedule and coordination.
.13 Other business relating to the Work.

.6 Record minutes. Minutes shall include significant proceedings and decisions and will identify "action by" parties.

.7 Distribute copies to meeting participants and affected parties not in attendance.

1.4 PREINSTALLATION MEETINGS

.1 When required by individual Sections of the Specification, the Contractor shall:
.1 Convene a preinstallation meeting at the site or at an appropriate location, prior to commencing the work of the Section.
.2 Require the attendance of parties directly affecting or affected by the work of the Section.
.3 Distribute written notice of the meeting to all parties required to attend.
.4 Prepare the agenda and preside at the meeting:
.1 Review conditions of installation, preparation and installation procedures.
.2 Review coordination with related work.
.5 Record minutes and distribute copies to meeting participants and affected parties not in attendance.

END OF SECTION

PART 1 GENERAL

1.1 REFERENCES

.1 Definitions:
- .1 Activity: element of Work performed during course of Project. Activity normally has expected duration, and expected cost and expected resource requirements. Activities can be subdivided into tasks.
- .2 Activity: Distinct, scheduled portion of work performed during course of a project.
- .3 Activity Duration: time in calendar units between start and finish of a scheduled activity. See also Duration.
- .4 Assumption: factor in planning process that is considered true, real, or certain without proof or demonstration.
- .5 Bar Chart (Gantt chart): graphic display of schedule-related information.
  - .1 In typical bar chart, activities or other Project elements are listed down left side of chart, dates are shown across top, and activity durations are shown as date-placed horizontal bars.
- .6 Baseline: original approved plan (for Project, work package, or activity), plus or minus approved scope changes.
- .7 Budget: approved estimate for a project or work breakdown structure component or schedule activity.
- .8 Cash Flow: projection of progress payment requests based on cash loaded construction schedule.
- .9 Change Control: process whereby modifications to documents, deliverables, or baselines associated with a project are identified, documented, approved, or rejected.
- .10 Completion Milestones: they are firstly Substantial Completion and secondly Final Certificate.
- .11 Constraint: applicable restriction or limitation, either internal or external to project, that will affect performance of Project. Factors that affect activities can be scheduled.
- .12 Contract: mutually binding agreement that obligates a seller to provide a specified product or service or result and obligates a buyer to pay for it.
- .13 Control: process of comparing actual performance with planned performance, analyzing variances, evaluating possible alternatives, and taking appropriate corrective action as needed
- .14 Corrective Action: intentional activity that realigns performance of project work with project management plan..
- .15 Critical Activity: any activity on a critical path.
  - .1 Most commonly determined by using critical path method.
- .16 Critical Path: sequence of activities that determines duration of Project. Generally, it is the longest path through Project.
  - .1 Usually defined as those activities with float less than or equal to specified value, often zero.
- .17 Critical Path Method (CPM): network analysis technique used to determine the amount of scheduling flexibility (amount of float) on various logical network paths in Project schedule network, and to determine the minimum total Project duration.
- .18 Data Date: date through which project status and progress were last determined and reported for analyses, such as scheduling and performance measurements.
- .19 Decomposition: technique used for dividing and subdividing project scope and project deliverables into smaller, more manageable parts.
- .20 Deliverable: unique and verifiable product, result, or capability to perform a service that is required to be produced to complete a process, phase, or project.

.21 Duration: total number of work periods (not including holidays or other non-working periods) required to complete activity or other Project element.
  .1 Usually expressed as workdays or work weeks.

.22 Early Finish Date: in critical path method, earliest possible point in time on which uncompleted portions of activity (or Project) can finish, based on network logic and schedule constraints.
  .1 Early finish dates can change as Project progresses and changes are made to Project plan.

.23 Early Start Date: in critical path method, earliest possible point in time on which uncompleted portions of activity (or Project) can start, based on network logic and schedule constraints.
  .1 Early start dates can change as Project progresses and changes are made to Project Plan.

.24 Execute: directing, managing, performing, and accomplishing project work; providing deliverables, and providing work performance information.

.25 Finish Date: point in time associated with activity's completion.
  .1 Usually qualified by one of following: actual, planned, estimated, scheduled, early, late, baseline, target, or current.

.26 Float: amount of time that activity may be delayed from its early start without delaying Project finish date.

.27 Forecast: estimate or prediction of conditions and events in project future based on information and knowledge available at time of forecast.
  .1 Information is based on projects past performance and expected future performance, and includes information that could impact project in future, a such as estimate at completion and estimate to complete.

.28 Gantt Chart: see Bar Chart.

.29 Impact Analysis: schedule analysis technique that adds a modeled delay to an accepted construction schedule to determined possible outcome of that delay on project completion.

.30 Imposed Date: a fixed date imposed on a schedule activity or schedule milestone, usually in form of a "start no earlier than" and "finish no later than" date.

.31 Lag: modification of logical relationship that directs delay in successor activity.

.32 Late Finish Date (LF): in critical path method, latest possible point in time that activity may be completed without delaying specified milestone (usually Project finish date).

.33 Late Start Date (LS): in critical path method, latest possible point in time that activity may begin without delaying specified milestone (usually Project finish date).

.34 Lead: modification of logical relationship that allows acceleration of successor task.

.35 Logic Diagram: see Project network diagram.

.36 Logical Relationship: dependency between two activities or between an activity and a milestone.

.37 Master Schedule: summary-level schedule that identifies major deliverable; work breakdowns structure and key milestones.

.38 Milestone: significant point or event in Project, usually completion of major deliverable.

.39 Monitoring: capture, analysis, and reporting of Project performance, usually as compared to plan.

.40 Network: see Project Schedule Network Diagram.

.41 Non-Critical Activities: activities which when delayed, do not affect specified Contract duration.

.42 Project Control System: fully computerized system utilizing commercially available software packages.

.43 Project Management: application of knowledge, skills, tools, and techniques, to project activities to meet project requirements.

.44 Project Management Plan: approved document that describes how project will be

executed, monitored, and controlled.
.1 Primary uses of Project management plan are to document planning assumptions and decisions, facilitate communication among stakeholders, and document approved scope, cost, and schedule baselines.
.2 Project management plan may be summary or detailed.

.45 Project Management Planning: development and maintenance of Project Management Plan.

.46 Project Management Planning, Monitoring and Control System: overall system operated to enable monitoring of Project Work in relation to established milestones.

.47 Project Management Team: Management team consisting of the Owner Representative, Consultant and Departmental Representative.

.48 Project Network Diagram: schematic display of logical relationships of Project activities.
.1 Always drawn from left to right to reflect Project chronology.

.49 Project Plan: formal, approved document used to guide both Project execution and Project control.
.1 Primary uses of Project plan are to document planning assumptions and decisions, facilitate communication among stakeholders, and document approved scope, cost, and schedule baselines.
.2 Project plan may be summary or detailed.

.50 Project Planning: development and maintenance of Project Plan.

.51 Project Planning, Monitoring and Control System: overall system operated to enable monitoring of Project Work in relation to established milestones.

.52 Project Schedule: planned dates for performing activities and planned dates for meeting milestones.

.53 Quantified days duration: working days based on 5 day work week, discounting statutory holidays.

.54 Risk: uncertain event or condition that, if it occurs, has positive or negative effect on Project's objectives.

.55 Schedule: see Project Schedule.

.56 Schedule Data: collection of information for describing and controlling schedule.

.57 Scope: see Project Scope.

.58 Start Date: point in time associated with activity's start, usually qualified by one of following: actual, planned, estimated, scheduled, early, late, target, baseline, or current.

.59 Work Breakdown Structure (WBS): deliverable-oriented hierarchical decomposition of Work to be executed by contractor to accomplish project objectives and create required deliverables. It organizes and defines total scope of Project. Each descending level represents an increasingly detailed definition of Project Work. WBS is decomposed into Work packages.

.2 Reference Standards:

SPEC NOTE: Edit the following paragraphs for this specific project.

.1 Project Management Institute (PMI Standards)
.1 A Guide to the Project Management Body of Knowledge (PMBOK Guide).
.2 Practice Standard for Scheduling.

1.2 ADMINSTRATIVE REQUIREMENTS

.1 Project Meeting:
.1 Meet with Project Management Team within **5** working days of Award of Contract date, to establish Work requirements and approach to project construction operations.
.2 Participate in regular project progress meetings with Project Management Team specifically intended to discuss update of detailed schedule and contract changes.

.2 Scheduling:
- .1 Planning: ensure that planning process is iterative and results in generally top-down processing with more detail being developed as planning progresses, and decisions concerning options and alternatives are made.
- .2 Ensure project schedule efficiencies through monitoring of Project in detail to ensure integrity of Critical Path, by comparing actual completions of individual activities with their scheduled completions, and review progress of activities that has started but are not yet completed.
- .3 Monitor sufficiently often so that causes of delays can immediately be identified and removed.

.3 Project monitoring and reporting:
- .1 Keep team aware of changes to schedule, and possible consequences as project progresses.
- .2 Use narrative reports to provide advice on seriousness of difficulties and measures to overcome them.
- .3 Begin narrative reporting with statement on general status of Project followed by summarization of delays, potential problems, corrective measures and Project status criticality.

.4 Critical Path Method (CPM) Requirements:
- .1 Ensure Master Plan and Detail Schedule are practical and remain within specified Contract duration.
- .2 Revise Master Schedule and Detail Schedule deemed impractical by Project Management Team and resubmit for approval.
- .3 Change to Contract Duration:
  - .1 Acceptance of Master Schedule and Detail Schedule showing scheduled Contract duration shorter than specified Contract duration does not constitute change to Contract.
  - .2 Duration of Contract may only be changed through bilateral Agreement.
- .4 Consider Master Schedule and Detail Schedule deemed practical by Project Management Team, showing Work completed in less than specified Contract duration, to have float.
- .5 First Milestone on Master Schedule and Detail Schedule will identify start Milestone with an "ES" constraint date equal to Award of Contract date.
- .6 Calculate dates for completion milestones from Plan and Schedule using specified time periods for Contract.
- .7 Substantial Completion with "LF" constraint equal to calculated date.
- .8 Calculations on updates to be such that if early finish of Interim Certificate falls later than specified Contract duration then float calculation to reflect negative float.
- .9 Delays to non-critical activities, those with float may not be basis for time extension.
- .10 Do not use float suppression techniques such as software constraints, preferential sequencing, special lead/lag logic restraints, extended activity times or imposed dates other than required by Contract.
- .11 Allow for and show Master Plan and Detail Schedule adverse weather conditions normally anticipated.
  - .1 Specified Contract duration has been predicated assuming normal amount of adverse weather conditions.
- .12 Provide necessary crews and manpower to meet schedule requirements for performing Work within specified Contract duration.
  - .1 Simultaneous use of multiple crews on multiple fronts on multiple critical paths may be required.
- .13 Arrange participation on and off site of subcontractors and suppliers, as required by

Project Management Team, for purpose of network planning, scheduling, updating and progress monitoring.

.1 Approvals by Project Management Team of original networks and revisions do not relieve Contractor from duties and responsibilities required by Contract.

.14 Ensure that it is understood that Award of Contract or time of beginning, rate of progress, Interim Certificate and Final Certificate as defined times of completion are of essence of this contract.

1.3 ACTION AND INFORMATIONAL SUBMITTALS

.1 Submit in accordance with Section 01 33 00 - Submittal Procedures.

.2 Submit to Project Management Team Project Control System for planning, scheduling, monitoring and reporting of project progress.

.3 Submit Project Control System to Project Management Team for approval.

.1 Failure to comply with each required submission may result in progress payment being withheld in accordance with Federal Government's GC 5 Terms of Payment.

.4 Include costs for execution, preparation and reproduction of schedule submittals in bid documents.

.5 Submit letter ensuring that schedule has been prepared in co-ordination with major sub-contractors.

.6 Refer to article "PROGRESS MONITORING AND REPORTING" of this specification Section for frequency of Project control system submittals.

.7 Submit impact analysis of schedule for changes that result in extension of contract duration.

.1 Include draft schedule update and report as outlined in article "PROGRESS MONITORING AND REPORTING".

.8 Submit Project planning, monitoring and control system data as part of initial schedule submission and monthly status reporting in following form.

.1 Electronic files in original scheduling software containing schedule and cash flow information, labelled with data date, specific update, and person responsible for update.

.2 Master Schedule Bar Chart.

.3 Construction Detail schedule Bar Chart.

.4 Listing of project activities including milestones and logical connectors, networks (sub-networks) from Project start to end. Sort activities by activity identification number and accompany with descriptions. List early and late start and finish dates together with durations, codes and float.

.5 Criticality report listing activities and milestones with negative and zero total float used as first sort for ready identification of [critical] paths through entire project. List early and late starts and finishes dates, together with durations, codes and float for critical activities.

.6 Progress report in early start sequence, listing for each trade, activities due to start, underway, or finished within 2 months from monthly update date. List activity identification number, description and duration. Provide columns for entry of actual start and finish dates, duration remaining and remarks concerning action required.

1.4 QUALITY ASSURANCE

.1 Use experienced personnel, fully qualified in planning and scheduling to provide services from start of construction to Final Certificate, including Commissioning.

1.5 WORK BREAKDOWN STRUCTURE (WBS)

.1 Prepare construction Work Breakdown Structure (WBS) within **10** working days of Award of Contract date.
- .1 Develop WBS through at least five levels: project, stage, element, sub-element and work package.

1.6 PROJECT MILESTONES

.1 Mandatory and recommended project milestones form targets for both Master Schedule and Detail Schedule of CPM construction network system.
- .1 Mandatory: Excavation completed.
- .2 Mandatory: Substructure completed.
- .3 Mandatory: Superstructure completed.
- .4 Mandatory: Building Closed-in and Weatherproofed.
- .5 Mandatory: Interior Finishing and fitting, mechanical and electrical work completed.
- .6 Mandatory: Outside Work completed.
- .7 Mandatory: Substantial Completion
- .8 Mandatory: Final Completion

1.7 MASTER SCHEDULE

.1 Structure and base CPM construction networks system on WBS coding in order to ensure consistency throughout Project.

.2 Prepare comprehensive construction Master Schedule (CPM logic diagram) and dependent Cash Flow Projection within **10** working days of finalizing Agreement to confirm validity or alternates of identified milestones.
- .1 Master Schedule will be used as baseline.
  - .1 Revise baseline as conditions dictate and as required by Project Management Team.
  - .2 Project Management Team as Project progresses will review and return revised baseline within **10** work days.

.3 Reconcile revisions to Master Schedule and Cash Flow Projections with previous baseline to provide continuous audit trail.

.4 Initial and subsequent Master Schedule will include:
- .1 Electronic containing schedule and cash flow information, clearly labelled with data date, specific update, and person responsible for update.
- .2 Bar chart identifying coding, activity durations, early/late and start/finish dates, total float, completion as percentile, current status and budget amounts.
- .3 Network diagram showing coding, activity sequencing (logic), total float, early/late dates, current status and durations.
- .4 Actual/projected monthly cash flow: expressed monthly and shown in both graphical and numerical form.

1.8 DETAIL SCHEDULE

.1 Provide detailed project schedule (CPM logic diagram) within **10** working days of Award of Contract date showing activity sequencing, interdependencies and duration estimates. Include listed activities as follows:
- .1 Shop drawings.
- .2 Samples.
- .3 Approvals.
- .4 Procurement.
- .5 Construction.
- .6 Installation.
- .7 Site works.
- .8 Testing.
- .9 Commissioning and acceptance.

.2 Relate Detail Schedule activities to basic activities and milestones developed and approved in Master Schedule.

.3 Clearly show sequence and interdependence of construction activities and indicate:
- .1 Start and completion of all items of Work, their major components, and interim milestone completion dates.
- .2 Activities for procurement, delivery, installation and completion of each major piece of equipment, materials and other supplies, including:
  - .1 Time for submittals, resubmittals and review.
  - .2 Time for fabrication and delivery of manufactured products for Work.
  - .3 Interdependence of procurement and construction activities.
- .3 Include sufficient detail to assure adequate planning and execution of Work. Activities should generally range in duration from 3 to 15 workdays each.

.4 Provide level of detail for project activities such that sequence and interdependency of Contract tasks are demonstrated and allow co-ordination and control of project activities. Show continuous flow from left to right.

.5 Ensure activities with no float are calculated and clearly indicated on logical CPM construction network system as being, whenever possible, continuous series of activities throughout length of Project to form "Critical Path". Increased number of critical activities is seen as indication of increased risk.

.6 Insert Change Orders in appropriate and logical location of Detail Schedule. After analysis, clearly state and report to Project Management Team for review effects created by insertion of new Change Order.

1.9 REVIEW OF THE CONSTRUCTION DETAIL SCHEDULE

.1 Allow 5 work days for review by Project Management Team of proposed construction Detail Schedule.

.2 Upon receipt of reviewed Detail Schedule make necessary revisions and resubmit to Project Management Team for review within 5 work days.

.3 Promptly provide additional information to validate practicability of Detail Schedule as required by Project Management Team.

.4 Submittal of Detail Schedule indicates that it meets Contract requirements and will be executed generally in sequence.

1.10 COMPLIANCE WITH DETAIL SCHEDULE

.1 Comply with reviewed Detail Schedule.

.2 Proceed with significant changes and deviations from scheduled sequence of activities that cause delay, only after receipt of approval by Consultant.

.3 Identify activities that are behind schedule and causing delay. Provide measures to regain slippage.
- .1 Corrective measures may include:
  - .1 Increase of personnel on site for effected activities or work package.
  - .2 Increase in materials and equipment.
  - .3 Overtime work, Additional work shifts.

.4 Submit to Project Management Team, justification, project schedule data and supporting evidence for approval of extension to Contract completion date or interim milestone date when required. Include as part of supporting evidence:
- .1 Written submission of proof of delay based on revised activity logic, duration and costs, showing time impact analysis illustrating influence of each change or delay relative to approved contract schedule.
- .2 Prepared schedule indicating how change will be incorporated into the overall logic diagram. Demonstrate perceived impact based on date of occurrence of change and include status of construction at that time.
- .3 Other supporting evidence requested by Project Management Team.
- .4 Do not assume approval of Contract extension prior to receipt of written approval from Consultant.

.5 In event of Contract extension, display in Detail Schedule that scheduled float time available for work involved has been used in full without jeopardizing earned float.
- .1 Consultant will determine and advise Contractor number of allowable days for extension of Contract based on project schedule updates for period in question, and other factual information.
- .2 Construction delays affecting project schedule will not constitute justification for extension of contract completion date.

1.11 PROGRESS MONITORING AND REPORTING

.1 On ongoing basis, Detail Schedule on job site must show "Progress to Date". Arrange participation on and off site of subcontractors and suppliers, as, and when necessary, for purpose of network planning, scheduling, updating and progress monitoring. Inspect Work with Consultant at least twice monthly to establish progress on each current activity shown on applicable networks.

.2 Update and reissue project Work Breakdown Structure and relevant coding structures as project develops and changes.

.3 Perform Detail Schedule update monthly with status dated (Data Date) on last working day of month. Update to reflect activities completed to date, activities in progress, logic and duration changes.

.4 Do not automatically update actual start and finish dates by using default mechanisms found in project management software.

.5 Submit to Project Management Team copies of updated Detail Schedule.

.6 Requirements for monthly progress monitoring and reporting are basis for progress payment request.

.7 Submit monthly written report based on Detail Schedule, showing Work to date performed, comparing Work progress to planned, and presenting current forecasts. Report must summarize progress, defining problem areas and anticipated delays with respect to Work schedule, and critical paths. Explain alternatives for possible schedule recovery to mitigate any potential delay. Include in report:

.1 Description of progress made.
.2 Pending items and status of: permits, shop drawings, change orders, possible time extensions.
.3 Status of Contract completion date and milestones.
.4 Current and anticipated problem areas, potential delays and corrective measures.
.5 Review of progress and status of Critical Path activities.

PART 2 PRODUCTS

2.1 NOT USED

.1 Not Used.

PART 3 EXECUTION

3.1 NOT USED

.1 Not Used.

END OF SECTION

PART 1 GENERAL

1.1 ADMINISTRATIVE

.1 Submit to Consultant submittals listed for review. Submit promptly and in orderly sequence to not cause delay in Work. Failure to submit in ample time is not considered sufficient reason for extension of Contract Time and no claim for extension by reason of such default will be allowed.

.2 Do not proceed with Work affected by submittal until review is complete.

.3 Present shop drawings, product data, samples and mock-ups in SI Metric units.

.4 Where items or information is not produced in SI Metric units converted values are acceptable.

.5 Review submittals prior to submission to Consultant. This review represents that necessary requirements have been determined and verified, or will be, and that each submittal has been checked and co-ordinated with requirements of Work and Contract Documents. Submittals not stamped, signed, dated and identified as to specific project will be returned without being examined and considered rejected.

.6 Notify Consultant in writing at time of submission, identifying deviations from requirements of Contract Documents stating reasons for deviations.

.7 Verify field measurements and affected adjacent Work are co-ordinated.

.8 Contractor's responsibility for errors and omissions in submission is not relieved by Consultant's review of submittals.

.9 Contractor's responsibility for deviations in submission from requirements of Contract Documents is not relieved by Consultant review.

.10 Keep one reviewed copy of each submission on site.

1.2 SHOP DRAWINGS AND PRODUCT DATA

.1 Where called for in the respective specification sections, submit drawings stamped and signed by professional engineer registered or licensed in Province of Ontario, Canada.

.2 Indicate materials, methods of construction and attachment or anchorage, erection diagrams, connections, explanatory notes and other information necessary for completion of Work. Where articles or equipment attach or connect to other articles or equipment, indicate that such items have been co-ordinated, regardless of Section under which adjacent items will be supplied and installed. Indicate cross references to design drawings and specifications.

.3 Allow 10 days for Consultant's review of each submission.

.4 Adjustments made on shop drawings by Consultant are not intended to change Contract Price. If adjustments affect value of Work, state such in writing to Consultant prior to proceeding with Work.

.5 Make changes in shop drawings as Consultant may require, consistent with Contract Documents. When resubmitting, notify Consultant in writing of revisions other than those requested.

.6 Accompany submissions with transmittal letter, in duplicate, containing:
- .1 Date.
- .2 Project title and number.
- .3 Contractor's name and address.
- .4 Identification and quantity of each shop drawing, product data and sample.
- .5 Other pertinent data.

.7 Submissions include:
- .1 Date and revision dates.
- .2 Project title and number.
- .3 Name and address of:
  - .1 Subcontractor.
  - .2 Supplier.
  - .3 Manufacturer.
- .4 Contractor's stamp, signed by Contractor's authorized representative certifying approval of submissions, verification of field measurements and compliance with Contract Documents.
- .5 Details of appropriate portions of Work as applicable:
  - .1 Fabrication.
  - .2 Layout, showing dimensions, including identified field dimensions, and clearances.
  - .3 Setting or erection details.
  - .4 Capacities.
  - .5 Performance characteristics.
  - .6 Standards.
  - .7 Operating weight.
  - .8 Wiring diagrams.
  - .9 Single line and schematic diagrams.
  - .10 Relationship to adjacent work.

.8 After Consultant's review, distribute copies.

.9 Submit electronic copy and 1 print of shop drawings for each requirement requested in specification Sections and as Consultant may reasonably request.

.10 Submit electronic copy and 1 print of product data sheets or brochures for requirements requested in specification Sections and as requested by Consultant where shop drawings will not be prepared due to standardized manufacture of product.

.11 Submit electronic copy and 1 print of test reports for requirements requested in specification Sections and as requested by Consultant.
- .1 Report signed by authorized official of testing laboratory that material, product or system identical to material, product or system to be provided has been tested in accord with specified requirements.
- .2 Testing must have been within 3 years of date of contract award for project.

.12 Submit electronic copy and 1 print of certificates for requirements requested in specification Sections and as requested by Consultant.
- .1 Statements printed on manufacturer's letterhead and signed by responsible officials of manufacturer of product, system or material attesting that product, system or material meets specification requirements.
- .2 Certificates must be dated after award of project contract complete with project name.

.13 Submit electronic copy and 1 print of manufacturers instructions for requirements requested in specification Sections and as requested by Consultant.

.1 Pre-printed material describing installation of product, system or material, including special notices and Material Safety Data Sheets concerning impedances, hazards and safety precautions.

.14 Submit electronic copy and 1 print of Manufacturer's Field Reports for requirements requested in specification Sections and as requested by Consultant.

.15 Documentation of the testing and verification actions taken by manufacturer's representative to confirm compliance with manufacturer's standards or instructions.

.16 Submit electronic copy and 1 print of Operation and Maintenance Data for requirements requested in specification Sections and as requested by Consultant.

.17 Delete information not applicable to project.

.18 Supplement standard information to provide details applicable to project.

.19 If upon review by Consultant no errors or omissions are discovered or if only minor corrections are made, a noted copy will be returned and fabrication and installation of Work may proceed. If shop drawings are rejected, noted copy will be returned and resubmission of corrected shop drawings, through same procedure indicated above, must be performed before fabrication and installation of Work may proceed.

.20 The review of shop drawings by the Consultant is for sole purpose of ascertaining conformance with general concept.

.1 This review shall not mean that the Consultant approves detail design inherent in shop drawings, responsibility for which shall remain with Contractor submitting same, and such review shall not relieve Contractor of responsibility for errors or omissions in shop drawings or of responsibility for meeting requirements of construction and Contract Documents.

.2 Without restricting generality of foregoing, Contractor is responsible for dimensions to be confirmed and correlated at job site, for information that pertains solely to fabrication processes or to techniques of construction and installation and for co-ordination of Work of sub-trades.

1.3 SAMPLES

.1 Submit for review samples in triplicate as requested in respective specification Sections. Label samples with origin and intended use.

.2 Deliver samples prepaid to Consultant's business address.

.3 Notify Consultant in writing, at time of submission of deviations in samples from requirements of Contract Documents.

.4 Where colour, pattern or texture is criterion, submit full range of samples.

.5 Adjustments made on samples by Consultant are not intended to change Contract Price. If adjustments affect value of Work, state such in writing to Consultant prior to proceeding with Work.

.6 Make changes in samples which Consultant may require, consistent with Contract Documents.

.7 Reviewed and accepted samples will become standard of workmanship and material against which installed Work will be verified.

.8 Erect mock-ups in accordance with 01 45 00 - Quality Control.

1.4 CERTIFICATES AND TRANSCRIPTS

.1 Immediately after award of Contract, submit Workers' Compensation Board status.
.2 Submit transcription of insurance immediately after award of Contract.

END OF SECTION

PART 1 GENERAL

1.1 REFERENCE STANDARDS

.1 Canada Labour Code, Part 2, Canada Occupational Safety and Health Regulations
  .1 Province of Ontario
    .1 Occupational Health and Safety Act and Regulations for Construction Projects, R.S.O. 1990, c.0.1, as amended and O. Reg. 213/91 as amended - Updated 2005.

1.2 ACTION AND INFORMATIONAL SUBMITTALS

.1 Submit in accordance with Section 01 33 00 - Submittal Procedures.

.2 Submit site-specific Health and Safety Plan: Within 7 days after date of Notice to Proceed and prior to commencement of Work. Health and Safety Plan must include:
  .1 Results of site specific safety hazard assessment.
  .2 Results of safety and health risk or hazard analysis for site tasks and operation found in work plan.

.3 Submit electronic copies of Contractor's authorized representative's work site health and safety inspection reports to Consultant and authority having jurisdiction.

.4 Submit copies of reports or directions issued by Federal, Provincial and Territorial health and safety inspectors.

.5 Submit copies of incident and accident reports.

.6 Submit WHMIS Safety Data Sheets (SDS).

.7 Departmental Representative will review Contractor's site-specific Health and Safety Plan and provide comments to Contractor within 10 days after receipt of plan. Revise plan as appropriate and resubmit plan to Departmental Representative 5 days after receipt of comments from Departmental Representative

.8 Departmental Representative's review of Contractor's final Health and Safety plan should not be construed as approval and does not reduce the Contractor's overall responsibility for construction Health and Safety.

.9 On-site Contingency and Emergency Response Plan: address standard operating procedures to be implemented during emergency situations.

1.3 FILING OF NOTICE

.1 File Notice of Project with Provincial authorities prior to beginning of Work.

.2 Contractor shall be responsible and assume the Principal Contractor role for each work zone location and not the entire complex. Contractor shall provide a written acknowledgement of this responsibility with 3 weeks of contract award. Contractor to submit written acknowledgement to CSST along with Ouverture de Chantier Notice.

.3 Contractor shall agree to install proper site separation and identification in order to maintain time and space at all times throughout life of project.

1.4 SAFETY ASSESSMENT

.1 Perform site specific safety hazard assessment related to project.

1.5 MEETINGS

.1 Schedule and administer Health and Safety meeting with Consultant prior to commencement of Work.

1.6 GENERAL REQUIREMENTS

.1 Develop written site-specific Health and Safety Plan based on hazard assessment prior to beginning site Work and continue to implement, maintain, and enforce plan until final demobilization from site. Health and Safety Plan must address project specifications.

.2 Departmental Representative may respond in writing, where deficiencies or concerns are noted and may request re-submission with correction of deficiencies or concerns.

1.7 RESPONSIBILITY

.1 Be responsible for health and safety of persons on site, safety of property on site and for protection of persons adjacent to site and environment to extent that they may be affected by conduct of Work.

.2 Contractor will be responsible and assume the role Constructor as described in the Ontario Occupational Health and Safety Act and Regulations for Construction Projects.

.3 Contractor shall be the Principal Contractor as described in the Quebec Act Respecting Health and Safety code for the Construction for only their scope and areas of work as defined and described this project specification.

.4 Comply with and enforce compliance by employees with safety requirements of Contract Documents, applicable federal, provincial, territorial and local statutes, regulations, and ordinances, and with site-specific Health and Safety Plan.

1.8 COMPLIANCE REQUIREMENTS

.1 Comply with Ontario Occupational Health and Safety Act, R.S.O. 1990, c. 0.1 and Ontario Regulations for Construction Projects, O. Reg. 213/91.

.2 Comply with R.S.Q., c. S-2.1, an Act respecting Health and Safety, and c. S-2.1, r.4 Safety Code for the Construction Industry.

.3 Comply with Occupational Health and Safety Regulations, 1996.

.4 Comply with Canada Labour Code, Canada Occupational Safety and Health Regulations.

1.9 UNFORSEEN HAZARDS

.1 When unforeseen or peculiar safety-related factor, hazard, or condition occur during performance of Work, follow procedures in place for Employee's Right to Refuse Work in accordance with Acts and Regulations of Province having jurisdiction and advise Consultant verbally and in writing.

.2 When unforeseen or peculiar safety-related factor, hazard, or condition occur during performance of Work, advise Health and Safety co-ordinator and follow procedures in accordance with Acts and Regulations of Province having jurisdiction and advise Consultant verbally and in writing.

1.10 HEALTH AND SAFETY CO-ORDINATOR

.1 Employ and assign to Work, competent and authorized representative as Health and Safety Co-ordinator. Health and Safety Co-ordinator must:
- .1 Have site-related working experience specific to activities.
- .2 Have working knowledge of occupational safety and health regulations.
- .3 Be responsible for completing Contractor's Health and Safety Training Sessions and ensuring that personnel not successfully completing required training are not permitted to enter site to perform Work.
- .4 Be responsible for implementing, enforcing daily and monitoring site-specific Contractor's Health and Safety Plan.
- .5 Be on site during execution of Work and report directly to and be under direction of site supervisor.

1.11 POSTING OF DOCUMENTS

.1 Ensure applicable items, articles, notices and orders are posted in conspicuous location on site in accordance with Acts and Regulations of Province having jurisdiction, and in consultation with Consultant.

1.12 CORRECTION OF NON-COMPLIANCE

.1 Immediately address health and safety non-compliance issues identified by authority having jurisdiction or by Consultant.

.2 Provide Consultant with written report of action taken to correct non-compliance of health and safety issues identified.

.3 Departmental Representative may stop Work if non-compliance of health and safety regulations is not corrected.

1.13 BLASTING

.1 Blasting or other use of explosives is not permitted without prior receipt of written instruction by Consultant.

1.14 POWDER ACTUATED DEVICES

.1 Use powder actuated devices only after receipt of written permission from Consultant.

1.15 WORK STOPPAGE

.1 Give precedence to safety and health of public and site personnel and protection of environment over cost and schedule considerations for Work.

END OF SECTION

PART 1 GENERAL

1.1 DEFINITIONS

.1 Environmental Pollution and Damage: presence of chemical, physical, biological elements or agents which adversely affect human health and welfare; unfavourably alter ecological balances of importance to human life; affect other species of importance to humankind; or degrade environment aesthetically, culturally and/or historically.

.2 Environmental Protection: prevention/control of pollution and habitat or environment disruption during construction. Control of environmental pollution and damage requires consideration of land, water, and air; biological and cultural resources; and includes management of visual aesthetics; noise; solid, chemical, gaseous, and liquid waste; radiant energy and radioactive material as well as other pollutants.

1.2 FIRES

.1 Fires and burning of rubbish on site are not permitted.

1.3 DISPOSAL OF WASTES

.1 Do not bury rubbish and waste materials on site.

.2 Do not dispose of waste or volatile materials such as: mineral spirits, oil, petroleum based lubricants, or toxic cleaning solutions into watercourses, storm or sanitary sewers. Ensure proper disposal procedures are maintained throughout project.

.3 Dispose of waste or volatile materials which could be hazardous to the health, in strict accordance with the requirements of the authorities having jurisdiction and in a manner which will protect construction personnel, visitors to the site and the public from all such hazards.

1.4 DRAINAGE

.1 Provide temporary drainage and pumping as necessary to keep excavations and site free from water.

.2 Do not pump water containing suspended materials into watercourses, storm or sanitary sewers, or onto adjacent properties.

.3 Control disposal or runoff of water containing suspended materials or other harmful substances in accordance with local authority requirements.

1.5 SITE CLEARING AND PLANT PROTECTION

.1 Protect trees and plants on site and adjacent properties where indicated.

.2 Protect roots of designated trees to dripline during excavation and site grading to prevent disturbance or damage. Avoid unnecessary traffic, dumping and storage of materials over root zones.

.3 Minimize stripping of topsoil and vegetation.

1.6 POLLUTION CONTROL

.1 Control emissions from equipment and plant to local authorities' emission requirements.

.2 Prevent sandblasting and other extraneous materials from contaminating air and waterways beyond application area, by providing temporary enclosures.

.3 Cover or wet down dry materials and waste to prevent blowing dust and debris. Control dust on all roads.

1.7 NOTIFICATIONS

.1 The Consultant will notify the Contractor in witting of observed noncompliance with Federal, Provincial or Municipal environmental laws or regulations, permits, and other elements of Contractor's Environmental Protection Plan.

.2 After receipt of such notice, inform the Consultant of proposed corrective action and take such action to the approval of the Consultant.

.3 The Consultant will issue a stop order of work until satisfactory corrective action has been taken.

.4 No time extensions will be granted or equitable adjustments allowed to the Contractor for such suspensions.

END OF SECTION

PART 1 GENERAL

1.1 QUALITY ASSURANCE - CONTROL OF INSTALLATION

.1 Monitor quality control over suppliers, manufacturers, products, services, site conditions and workmanship to produce work of the specified quality.

.2 Comply with manufacturers' instructions, including each step in the sequence.

.3 Should manufacturer's instructions conflict with the Contract Documents, request clarification from the Consultant before proceeding.

.4 Comply with specified standards as a minimum quality for the Work, except where more stringent tolerances, codes or specified requirements indicate higher standards or more precise workmanship.

.5 Perform work by persons qualified to produce the required and specified quality.

.6 Wherever critical to a proper fit, verify dimensions on site prior to commencement of manufacture.

.7 Secure materials and products in place with positive anchorage devices designed and sized to withstand stresses, vibration, physical distortion or disfigurement.

1.2 TOLERANCES

.1 Monitor fabrication and installation tolerance control of products to produce acceptable work. Do not permit tolerances to accumulate.

.2 Comply with manufacturers' tolerances. Should a manufacturer's tolerances conflict with the Contract Documents, request clarification from the Consultant before proceeding.

.3 Adjust products to appropriate dimensions; position products before securing in place.

1.3 REFERENCES, CODES AND STANDARDS

.1 Perform the Work in accordance with the latest edition, including all revisions, of applicable codes and regulations of federal, provincial, or local application, provided that, in any case of conflict or discrepancy, the more stringent requirements shall apply.

.2 Meet or exceed the requirements of specified standards, codes and referenced documents.

.3 For materials, products or workmanship specified by association, trade or other consensus standards, comply with the requirements of the standard, except where more rigid requirements are specified or are required by applicable codes.

.4 In each case, where a standard, code or other document is referenced, the latest edition or revision shall apply, unless specified otherwise, except where a specific date of issue is established by code.

.5 Neither the contractual relationships, duties or responsibilities of the parties in the Contract shall be altered from those defined by the Contract Documents by mention or inference otherwise in any referenced document.

1.4 MOCK-UPS

.1 Procedures for the preparation and submission of mock-ups are specified in Section 01 33 00 "Submittal Procedures".

.2 Tests will be formed under the provisions identified in this Section.

1.5 INSPECTION AND TESTING

.1 Inspection:
- .1 Provide access to the Work at all times.
- .2 Provide full cooperation and sufficient, safe, and proper facilities at all times for review of the Work by and for inspection of the Work by authorized agencies.
- .3 If portions of the Work are in preparation off site, provide access to such work, whenever it is in progress.
- .4 Provide the Consultant with reasonable notice of when work designated for tests, inspections or approvals will be ready for review and inspection.
- .5 Provide the Consultant with reasonable notice of the date and time of inspections by other authorities.

.2 Independent Inspection Agencies:
- .1 Independent Inspection/Testing Agencies will be engaged by the Owner for the purpose of inspecting and/or testing portions of the Work. The Cost of initial inspections and/or testing will be paid by the Owner.
- .2 Cooperate with Inspection/Testing Agencies. Furnish samples of materials, design mix, equipment, tools, storage, safe access and assistance by incidental labour as requested.
- .3 If additional tests are required by the Consultant, make arrangements with the Inspection/Testing Agency and pay for additional samples and tests.
- .4 The cost of additional inspection and/or testing required because of non-compliance with the Contract Documents at the initial test, shall be paid by the Trade Contractor.

.3 Reports: All inspection and test reports shall include for, one copy to each of the following:
- .1 The Consultant.
- .2 Applicable Specialist Consultants.
- .3 The Contractor.
- .4 The Subcontractor responsible for the work.
- .5 Material/product manufacturers and/or suppliers, as applicable.

.4 Covering Installed Work: Do not cover installed work with subsequent work until the installed work has been reviewed on site by the Consultant.

1.6 MANUFACTURERS' FIELD SERVICES

.1 When individual specification Sections require material or product suppliers or manufacturers to provide qualified staff personnel to observe site conditions, conditions of surfaces and installation, quality of workmanship, start-up of equipment and testing, adjusting and balancing of equipment, as applicable, and to initiate instructions when necessary.

.2 Report observations and site decisions or instructions given to applicators or installers that are supplemental or contrary to the manufacturer's written instructions.

.3 Refer to Section 01 33 00 "Submittal Procedures".

END OF SECTION

PART 1 GENERAL

1.1 REFERENCES

.1 Canadian Standards Association (CSA International)
- .1 CSA-A23.1-04 Concrete Materials and Methods of Concrete Construction.
- .2 CSA-A23.2-04, Methods of Test for Concrete.
- .3 CSA-O121-08, Douglas Fir Plywood.
- .4 CAN/CSA-S269.2-M87(R2003), Access scaffolding for Construction Purposes.
- .5 CAN/CSA-Z321-96(R2001), Signs and Symbols for the Occupational Environment.

.2 Master Painters Institute (MPI):
- .1 MPI Architectural Specification Manual, 2004 (referred to herein as "MPI Manual")
- .2 MPI Approved Product List, January 2009 (Referred to herein as "MPI APL").

1.2 INSTALLATION AND REMOVAL

.1 Prepare a site plan indicating proposed location and dimensions of the area to be fenced and used by the Contractor, the number of trailers to be used, avenues of ingress/egress to the fenced area and details of the fence installation.

.2 Identify areas which have to be gravelled to prevent tracking of mud.

.3 Indicate use of a supplemental or other staging area.

.4 Provide construction facilities in order to execute work expeditiously.

.5 Remove from the site all such work after use.

1.3 SCAFFOLDING

.1 Design and construct scaffolding in accordance with CAN/CSA-S269.2.

.2 Provide and maintain scaffolding, ramps, ladders, swing staging, platforms, and temporary stairs as required for the performance of the work.

1.4 HOISTING

.1 Provide, operate and maintain hoists and cranes required for moving of workers, materials and equipment. Make financial arrangements with Subcontractors for their use of hoists.

.2 Hoists and cranes to be operated by qualified operators.

1.5 SITE STORAGE/LOADING

.1 Confine work and operations of employees to the areas designated in the Contract Documents. Do not unreasonably encumber the premises with products.

.2 Do not load or permit to load any part of the work with a weight or force that will endanger the work.

1.6 CONSTRUCTION PARKING

.1 Parking will be permitted on site provided it does not disrupt the performance of the work or the normal use of the existing building. Restrict parking to the areas designated by the Owner.

.2 Provide and maintain adequate access to the project site.

1.7 OFFICES

.1 Provide an office heated to 21°C, lighted to 750 lx, and ventilated, of sufficient size to accommodate site meetings and furnished with a drawing laydown table.

.2 Provide a marked and fully stocked first-aid case in a readily available location.

.3 Subcontractor trailers:
- .1 Subcontractors to provide their own offices as necessary. Coordinate the location of these offices with the Owner.
- .2 The Owner will provide a 15A 120V outlet for power supply to each Subcontractor's trailer. The Subcontractor it responsible for connection to the outlet.
- .3 Power from this source shall not be used for heating; the Subcontractor is responsible for heating the trailer.

1.8 EQUIPMENT, TOOL AND MATERIALS STORAGE

.1 Provide and maintain, in a clean and orderly condition, lockable weatherproof sheds for storage of tools, equipment and materials.

.2 Locate materials not required to be stored in weatherproof sheds on the site in a manner to cause the least interference with work activities.

.3 Coordinate the locations of storage sheds and outside materials storage with the Owner.

1.9 SANITARY FACILITIES

.1 Provide sanitary facilities for the work force in accordance with governing regulations and ordinances.

.2 Coordinate the locations of temporary sanitary facilities with the Owner.

.3 Post notices and take precautions as required by local health authorities. Keep area and premises in sanitary condition.

.4 Existing permanent sanitary facilities may not be used on by construction personnel.

1.10 PROTECTION AND MAINTENANCE OF TRAFFIC

.1 Provide access and temporary relocated roads as necessary to maintain traffic.

.2 Maintain and protect traffic on affected roads during construction period except as otherwise specifically directed by the Consultant.

.3 Provide measures for protection and diversion of traffic, including provision of watch-persons and flag-persons, erection of barricades, placing of lights around and in front of equipment and work, and erection and maintenance of adequate warning, danger, and direction signs

.4 Protect the travelling public from damage to person and property.

.5 The Contractor's traffic on roads selected for hauling material to and from site is to interfere as little as possible with public traffic.

.6 Verify the adequacy of existing roads and allowable load limit on these roads. The Contractor is responsible for repair of damage to roads caused by construction operations.

.7 Provide necessary lighting, signs, barricades, and distinctive markings for safe movement of traffic.

.8 Provide dust control as necessary to ensure safe operation at all times.

.9 Provide lighting as necessary to ensure full and clear visibility for the full width of haul roads and work areas during night work. operations.

.10 Provide snow removal during the period of the work. Snow may be stockpiled on site at locations designated by the Owner.

.11 Upon completion of the work, remove temporary facilities and restore roads and site areas to their original condition or construct site improvements as indicated, as applicable.

1.11 CLEAN-UP

.1 Remove construction debris, waste materials, packaging material from the work site daily.

.2 Clean dirt or mud tracked onto paved or surfaced roadways.

.3 Store salvageable materials resulting from demolition activities.

.4 Coordinate with Section 01 74 19 " Waste Management and Disposal".

END OF SECTION

PART 1 GENERAL

1.1 REFERENCE STANDARDS

.1 Within the individual specifications Sections, reference standards are identified. Conform to these standards, in whole or part, as specifically specified.

.2 Conform to latest date of issue of referenced standards in effect on the date of submission of tenders, except where a date or issue is specifically noted.

1.2 QUALITY

.1 Products, materials, equipment and articles (referred to as materials or products throughout the specifications) incorporated in the Work shall be new, not damaged or defective, and of the best quality (compatible with the specifications) for the purpose intended. If requested, furnish evidence as to the type, source and quality of materials or products provided.

.2 Defective products will be rejected, regardless of previous inspections. Inspection does not relieve the Contractor's responsibility, but is a precaution against oversight or error. The Contractor shall remove and replace defective products at own expense and be responsible for delays and expenses caused by rejection.

.3 Should any dispute arise as to the quality or fitness of materials or products, the decision rests strictly with the Consultant, based upon the requirements of the Contract Documents.

1.3 PRODUCT AVAILABILITY

.1 Immediately review material and product delivery requirements and anticipate foreseeable supply delays for any items. Notify the Consultant.

.2 In the event of failure to notify the Consultant at the commencement of the Work, the Consultant reserves the right to substitute more readily available products of similar character, at no increase in the Contract Price.

1.4 TRANSPORTATION AND HANDLING

.1 Transport and handle materials and products in accordance with the manufacturer's instructions.

.2 Promptly, upon arrival on site, inspect shipments to ensure that products comply with the requirements, quantities are correct and materials and products are undamaged.

.3 Handle and store materials and products in a manner which will prevent damage, adulteration, deterioration and soiling and in accordance with the manufacturer's instructions when applicable.

1.5 STORAGE AND PROTECTION

.1 Store packaged or bundled materials or products in original and undamaged condition with manufacturer's seal and labels intact. Do not remove from packaging or bundling until required in the Work.

.2 Store sensitive materials and products in weathertight, climate controlled enclosures, in an environment favourable to the material or product.

.3 For exterior storage of fabricated products, place on sloped supports, above ground.

.4 Remove and replace damaged materials and products at own expense and to the Consultant's satisfaction.

.5 Provide off-site storage and protection when the site does not permit on-site storage or protection, of products subject to deterioration with impervious sheet covering. Provide ventilation to prevent condensation and degradation of materials and products.

.6 Store loose granular materials on solid flat surfaces, in a well-drained area. Prevent mixing with foreign matter.

.7 Provide equipment and personnel to store materials and products by methods to prevent soiling, disfigurement, or damage.

.8 Arrange storage of materials and products to permit access for inspection. Periodically inspect to verify materials and products are undamaged and are maintained in acceptable condition.

1.6 MANUFACTURER'S INSTRUCTIONS

.1 Unless otherwise indicated in the specifications, install or erect materials and products in accordance with the manufacturers' instructions.

.2 Notify the Consultant in writing, of conflicts between the specification and the manufacturer's instructions, so that the Consultant will establish a course of action.

.3 Improper installation or erection of materials and products, due to failure in complying with these requirements, authorizes the Consultant to require removal and re-installation at no increase in the Contract Sum.

1.7 WORKMANSHIP

.1 Workmanship shall be the best quality, executed by workers experienced and skilled in the respective duties for which they are employed. Immediately notify the Consultant if required work is such as to make it impractical to produce the required results.

.2 Do not employ anyone unskilled in their required duties. The Consultant reserves the right to require dismissal from the site of workers deemed incompetent or careless.

.3 Decisions as to the quality or fitness of workmanship in cases of dispute rest solely with the Consultant whose decision is final.

1.8 CONCEALMENT

.1 In finished areas, conceal pipes, ducts and wiring in floors, walls and ceilings, except where indicated otherwise.

1.9 LOCATION OF FIXTURES

.1 Consider the indicated location of fixtures, outlets and mechanical and electrical items as approximate.

.2 Inform the Consultant of conflicting installation. Install as directed.

1.10 REMEDIAL WORK

.1 Perform remedial work required to repair or replace the parts or portions of the Work identified as defective or unacceptable. Coordinate adjacent affected Work as required.

.2 Perform remedial work by specialists familiar with the materials affected. Perform work in a manner which will neither damage nor endanger any portion of the Work.

1.11 FASTENINGS

.1 Provide metal fastenings and accessories in the same texture, colour and finish as adjacent materials, unless indicated otherwise.

.2 Prevent electrolytic action between dissimilar metals and materials.

.3 Use noncorrosive hot dip galvanized steel fasteners and anchors for securing exterior work, unless stainless steel or other material is specifically specified in the affected specification Section.

1.12 FASTENINGS – EQUIPMENT

.1 Use fastenings of standard commercial sizes and patterns with material and finishes suitable for service.

.2 Use heavy hexagon heads, semi-finished unless otherwise specified. Use No. 304 stainless steel for exterior areas.

.3 Bolts may not project more than one diameter beyond the nuts.

.4 Use plain type washers on equipment, sheet metal and soft gasket lock type washers where vibrations occur. Use resilient washers with stainless steel.

1.13 PROTECTION OF WORK IN PROGRESS

.1 Adequately protect Work completed or in progress. Work damaged or defaced due to failure in providing such protection is to be removed and replaced, or repaired, as directed by the Consultant, at no increase in Contract Price.

1.14 OVERLOADING

.1 Prevent overloading of any part of the building. Do not cut, drill or sleeve any load bearing structural member, unless specifically indicated, without the Consultant's written approval.

1.15 EXISTING UTILITIES

.1 When breaking into or connecting to existing services or utilities, execute Work at times directed by local governing authorities, with a minimum of disturbance to the Work, and/or pedestrian and vehicular traffic.

.2 Protect, relocate or maintain existing active services. When services are encountered, cap off in a manner approved by the authority having jurisdiction. Stake and record the location of the capped service.

1.16 PRODUCT OPTIONS

.1 Products specified by reference standards or by description only: any product meeting those

standards or description.

.2 Products specified by naming one or more manufacturers with substitutions specifically excluded: products of manufacturers named and meeting the specifications; no options or substitutions allowed.

.3 Products specified by naming one or more manufacturers with no specific exclusion of substitutions: submit a request for substitution for any manufacturer not named, in accordance with the article "Substitutions" hereinafter.

1.17 SUBSTITUTIONS

.1 Refer to Section 01 25 00 "Substitution Procedures".

END OF SECTION

PART 1 GENERAL

1.1 REFERENCES

.1 Owner's identification of existing survey control points and property limits.

1.2 QUALIFICATIONS OF SURVEYOR

.1 Qualified registered land surveyor, licensed to practise in the Province of Ontario ans acceptable to the Consultant.

1.3 SURVEY REFERENCE POINTS

.1 Existing base horizontal and vertical control points are designated on drawings.

.2 Locate, confirm and protect control points prior to starting site work. Preserve permanent reference points during construction.

.3 Make no changes or relocations without prior written notice to the Consultant.

.4 Report to the Consultant when a reference point is lost or destroyed, or requires relocation because of necessary changes in grades or locations.

.5 Require the surveyor to replace the control points in accordance with the original survey control.

1.4 SURVEY REQUIREMENTS

.1 Establish two permanent bench marks on site, referenced to established bench marks by survey control points. Record the locations, with horizontal and vertical data, in the Project Record Documents.

.2 Establish lines and levels, locate and lay out, by instrumentation.

.3 Stake for grading, fill and topsoil placement and landscaping features.

.4 Stake slopes and berms.

.5 Establish pipe invert elevations.

.6 Stake batter boards for foundations.

.7 Establish foundation locations and floor elevations.

.8 Establish lines and levels for mechanical and electrical work.

1.5 EXISTING SERVICES

.1 Before commencing work, establish location and extent of service lines in the area of work and notify the Consultant of findings.

.2 Remove abandoned service lines within 2 m of structures. Cap or otherwise seal lines at cut-off points as directed by the Consultant.

1.6 LOCATION OF EQUIPMENT AND FIXTURES

.1 Location of equipment, fixtures and outlets indicated or specified are to be considered as approximate.

.2 Locate equipment, fixtures and distribution systems to provide minimum interference and maximum usable space and in accordance with the manufacturer's recommendations for safety, access and maintenance.

.3 Inform the Consultant of the impending installation and obtain approval for the actual location.

.4 When required by the Consultant, submit field drawings to indicate the relative position of various services and equipment.

1.7 RECORDS

.1 Maintain a complete, accurate log of control and survey work as it progresses.

.2 On completion of the foundations and major site improvements, prepare a certified survey showing dimensions, locations, angles and elevations of ther work.

.3 Record the locations of maintained, re-routed and abandoned service lines.

1.8 SUBMITTALS

.1 Submit name and address of the Surveyor to the Consultant.

.2 On the request of the Consultant, submit documentation to verify the accuracy of the field engineering work.

.3 Submit a certificate signed by the surveyor certifying and noting those elevations and locations of completed work that conform and do not conform with the Contract Documents.

1.9 SUBSURFACE CONDITIONS

.1 Promptly notify the Consultant in writing if subsurface conditions at the site differ materially from those indicated in the Contract Documents, or a reasonable assumption of probable conditions based thereon.

.2 After prompt investigation, should the Consultant determine that conditions do differ materially, instructions will be issued for changes in the work and the Contract Price will be adjusted accordingly.

END OF SECTION

PART 1 GENERAL

1.1 WORKMANSHIP

.1 Workmanship shall be best quality, executed by workers experienced and skilled in respective duties for which they are employed. Immediately notify the Consultant if required work is such as to make it impractical to produce the required results.

.2 Do not employ any unfit person or anyone unskilled in his/her required duties.

.3 In cases of dispute, decisions as to quality or fitness of workmanship rest with the Consultant.

1.2 CONCEALMENT

.1 Except where indicated otherwise, in finished areas, conceal pipes, ducts and wiring in floors, walls and ceilings,

.2 Before installation, inform the Consultant if there is a contradictory situation. Install as directed by the Consultant.

1.3 LOCATION OF FIXTURES

.1 The locations of fixtures, apparatus, equipment, fittings, outlets, conduits, pipes and ducts shown or specified, but not dimensioned, shall be considered approximate.

.2 Request clarification from the Consultant, to establish exact locations. Any relocation caused by the Contractor's failure to request clarification shall be done by the Contractor as part of the Work. Where job conditions require reasonable changes in indicated locations and arrangements, make such changes at no additional cost.

.3 Conserve space and coordinate with the work of other Sections to ensure that ducts, pipes and conduits will fit into allocated wall and ceiling spaces.

.4 Where ducts, piping and conduits are permitted to be exposed, they shall be neatly and uniformly laid out, parallel to adjacent building lines and parallel to each other where they run in the same direction. Request the Consultant's review of exposed installations prior to the start of work. Where exposed work is not installed in accordance with the Consultant's prior review, make changes to such work, as directed by the Consultant, at no extra cost to the Contract.

.5 Except where locations are specifically noted on the drawings, install exposed mechanical and electrical fixtures, including outlets, switches, thermostats, panels and other items located on walls in an orderly and neatly laid out manner, lining up with each other and grouped together where possible. Request the Consultant's review of the proposed installation prior to the start of rough-in work. Relocate at no extra cost to the Contract any work for which the Consultant's review prior to the start of work was not requested.

1.4 REMOVED MATERIAL

.1 Unless otherwise specified, materials designated for removal become the Contractor's property and shall be taken from site.

.2 Deposit removed unsalvageable materials in a garbage container daily or more frequently if directed by the Consultant.

.3 Locate the garbage container where directed by the Consultant.

.4 Arrange for removal of containers immediately as soon as they are full. Legally dispose of content.

1.5 CONSTRUCTION SAFETY REQUIREMENTS

.1 Execute all work in strict compliance with construction health and safety requirements specified in Section 01 35 29.06 "Health and Safety Procedures".

1.6 POWDER ACTUATED FASTENING DEVICES

.1 Do not use powder actuated tools using explosives, unless permitted expressly by the Consultant; comply with requirements of CAN3-Z166.2-M85, Use and Handling of Powder Actuated Tools.

1.7 CUTTING, PATCHING & MAKING GOOD

.1 Approvals: Submit written request in advance of cutting or alteration which affects:
- .1 Structural integrity of any element of Project.
- .2 Integrity of weather-exposed or moisture-resistant elements.
- .3 Efficiency, maintenance, or safety of any operational element.
- .4 Visual qualities of sight-exposed elements.
- .5 Work of CMCC or a separate contractor.

.2 Inspection:
- .1 Inspect existing conditions, including elements subject to damage or movement during cutting and patching.
- .2 After uncovering, inspect conditions affecting performance of work.
- .3 Beginning of cutting or patching shall be construed to mean acceptance of existing conditions.

.3 Execution:
- .1 Perform cutting, fitting, and patching as required to complete the Work.
- .2 Remove and replace defective and non- conforming work.
- .3 Provide openings in non-structural elements of the Work for penetrations of mechanical and electrical work.
- .4 Perform work in a manner which will avoid damage to other work.
- .5 Prepare proper surfaces to receive patching and finishing.
- .6 Where possible, employ the original installer to perform cutting and patching for weather-exposed and moisture-resistant elements, and sight-exposed surfaces.
- .7 Cut rigid materials using a power saw or core drill. Pneumatic or impact tools will not be allowed.
- .8 Restore work with new products in accordance with the Contract Documents.
- .9 Fit work airtight to pipes, sleeves, ducts, conduit, and other penetrations through surfaces.
- .10 At penetrations of fire-rated wall, ceiling, or floor construction, completely seal voids with fire-rated material, acceptable to the authorities having jurisdiction, full thickness of construction element.
- .11 Refinish surfaces to match adjacent finishes; for continuous surfaces refinish to the nearest intersection; for an assembly, refinish the entire unit.
- .12 In the finished work there shall be no detectable difference in appearance between existing surfaces, patched surfaces and new surfaces.

1.8 SLEEVES, HANGERS AND INSERTS

.1 Co-ordinate the setting and packing of sleeves and supply and installation of hangers and inserts. Obtain Consultant's approval before cutting into structure.

END OF SECTION

PART 1 GENERAL

1.1 PROJECT CLEANLINESS

.1 Maintain the work in a tidy condition, free from accumulation of waste products and debris, including that caused by the Owner or other contractors.

.2 Remove waste materials from the site at daily regularly scheduled times or dispose of as directed by the Consultant. Do not burn waste materials on site.

.3 Clear snow and ice from access to the building; remove from the site.

.4 Make arrangements with and obtain permits from authorities having jurisdiction for disposal of waste and debris.

.5 Provide on-site containers for collection of waste materials and debris.

.6 Provide and use marked separate bins for recycling. Refer to Section 01 74 19 " Waste Management and Disposal".

.7 Dispose of waste materials and debris off site.

.8 Clean interior areas prior to the start of finishing work, and maintain areas free of dust and other contaminants during finishing operations.

.9 Store volatile waste in covered metal containers, and remove from the premises at end of each working day.

.10 Provide adequate ventilation during the use of volatile or noxious substances. Use of the building ventilation systems is not permitted for this purpose.

.11 Use only cleaning materials recommended by the manufacturer of the surface to be cleaned, and as recommended by the cleaning material manufacturer.

.12 Schedule cleaning operations so that resulting dust, debris and other contaminants will not fall on wet, newly painted surfaces nor contaminate building systems.

1.2 FINAL CLEANING

.1 When work is Substantially Performed remove surplus products, tools, construction machinery and equipment not required for performance of the remaining work.

.2 Remove waste products and debris other than that caused by others, and leave the work clean and suitable for occupancy.

.3 Prior to final review, remove surplus products, tools, construction machinery and equipment.

.4 Remove waste products and debris, including that caused by the Owner or other contractors.

.5 Remove waste materials from the site at regularly scheduled times or dispose of as directed by the Consultant. Do not burn waste materials on site.

.6 Make arrangements with and obtain permits from authorities having jurisdiction for disposal of waste

and debris.

.7 Clean and polish glass, mirrors, hardware, wall tile, stainless steel, chrome, porcelain enamel, baked enamel, plastic laminate, and mechanical and electrical fixtures. Replace broken, scratched or disfigured glass.

.8 Remove stains, spots, marks and dirt from decorative work, electrical and mechanical fixtures, furniture fitments, walls, floors and other sight-exposed surfaces.

.9 Clean lighting reflectors, lenses, and other lighting surfaces.

.10 Vacuum clean and dust building interiors, behind grilles, louvres and screens.

.11 Wax, seal, shampoo or prepare floor finishes, as recommended by manufacturer.

.12 Inspect finishes, fitments and equipment and ensure specified workmanship and operation.

.13 Broom clean and wash exterior walks, steps and surfaces; rake clean other surfaces of the grounds.

.14 Remove dirt and other disfiguration from exterior surfaces.

.15 Clean and sweep roofs, gutters, areaways, and sunken wells.

.16 Sweep and wash clean paved areas.

.17 Clean equipment and fixtures to sanitary condition; clean or replace filters of mechanical equipment.

.18 Clean roofs, downspouts, and drainage systems.

.19 Remove debris and surplus materials from crawl areas and other accessible concealed spaces.

.20 Remove snow and ice from access to the building.

1.3 WASTE MANAGEMENT AND DISPOSAL

.1 Separate waste materials for reuse and recycling in accordance with Section 01 74 19 - Waste Management and Disposal.

END OF SECTION

PART 1 GENERAL

1.1 CONSTRUCTION & DEMOLITION WASTE

.1 Carefully deconstruct and source separate materials/equipment and divert, from D&C waste destined for landfill to maximum extent possible. Target for this project is 75% diversion from landfill. Reuse, recycle, compost, anaerobic digest or sell material for reuse except where indicated otherwise. On site sales are not permitted.

.2 Source separate waste and maintain waste audits in accordance with the Environmental Protection Act, Ontario Regulation 102/94 and Ontario Regulation 103/94.
- .1 Provide facilities for collection, handling and storage of source separated wastes.
- .2 Source separate the following waste:
  - .1 Brick and portland cement concrete.
  - .2 Corrugated cardboard.
  - .3 Wood, not including painted or treated wood or laminated wood.
  - .4 Gypsum board, unpainted.
  - .5 Steel.

.3 Submit a waste reduction workplan indicating the materials and quantities of material that will be recycled and diverted from landfill.
- .1 Indicate how material being removed from the site will be reused, recycled, composted or anaerobically digested.

.4 Submit proof that all waste is being disposed of at a licensed land fill site or waste transfer site. A copy of the disposal/waste transfer site's license and a letter verifying that said landfill site will accept the waste must be supplied to Consultant prior to removal of waste from the demolition site.

1.2 1.2 WASTE PROCESSING SITES

.1 Province of: Ontario.
Ministry of Environment, Conservation and Parks, 135 St. Clair Avenue West, Toronto, ON, M4V 1P5.
Telephone: 1-800-565-4923 or 416-323-4321.
Fax: 416-314-6713.

.2 Recycling Council of Ontario: 55 University Avenue, #1500, Toronto, ON, M5J 2H7.
Telephone: 416-657-2797 or 1-888-501-9637.
Fax: 416-960-8053.
Email: rco@rco.on.ca.
Internet: http://www.rco.on.ca/.

PART 2 PRODUCTS

2.1 NOT USED

Not Used.

PART 3 EXECUTION

3.1 CANADIAN GOVERNMENTAL DEPARTMENTS CHIEF RESPONSIBILITY FOR THE ENVIRONMENT

.1 Government Chief Responsibility for the Environment:

Province	Address	General Inquiries	Fax
Ontario	Ministry of Environment, Conservation And Parks 135 St Clair Avenue West Toronto, ON M4V 1P5	(416) 323-4321 (800) 565-4923	(416) 314-6713
	Environment and Climate Change Canada Toronto, ON	(416) 734-4494	

END OF SECTION

PART 1 GENERAL

1.1 INSPECTION AND DECLARATION PROCEDURES

.1 Follow the recommended procedures concerning substantial performance of construction contracts and completion take-over of projects as prescribed in OAA/OGCA Document 100 "Take Over Procedures".

1.2 REINSPECTION

.1 Should status of the Work require reinspection by The Consultant due to failure of Work to comply with the Contract Documents, the Owner will deduct the costs of reinspection services from payment to the Contractor.

1.3 FINAL CLEANING

.1 Refer to Section 01 74 11 "Cleaning".

1.4 ADJUSTING

.1 Adjust operating products and equipment to ensure smooth and unhindered operation.

1.5 PROJECT CLOSEOUT SUBMITTALS

.1 Prior to application for Certificate of Substantial Performance, submit the documents specified in Section 01 78 00 "Closeout Submittals".

.2 The Certificate of Substantial Performance will not be issued until the above documents have been submitted and are deemed by the Consultant to be acceptable.

END OF SECTION

PART 1 GENERAL

1.1 SUBMITTALS

.1 Submittals: in accordance with Section 01 33 00 "Submittal Procedures".

.2 Prepare instructions and data using personnel experienced in the maintenance and operation of the described products.

.3 A copy will be returned after final inspection, with the Consultant's comments.

.4 Revise content of the documents, as required, prior to final submittal.

.5 Two weeks prior to Substantial Performance of the Work, submit to the Consultant, four final copies of operating and maintenance manuals in English and French.

.6 Ensure spare parts, maintenance materials and special tools provided are new, undamaged, not defective, and of the same quality and manufacture as the products provided in the work.

.7 If requested, furnish evidence of the type, source and quality of products provided.

.8 Defective products will be rejected, regardless of previous inspections. Replace products at own expense.

.9 Pay costs of transportation.

1.2 FORMAT

.1 Organize data as an instructional manual.

.2 Binders: vinyl, hard covered, 3 'D' ring, loose leaf 219 x 279 mm with spine and face pockets.

.3 When multiple binders are used, correlate data into related consistent groupings. Identify the contents of each binder on the spine.

.4 Cover: identify each binder with a typewritten or printed title 'Project Record Documents'; list the title of the project and identify the subject matter of the contents.

.5 Arrange content by systems, under Section numbers and sequence of Table of Contents.

.6 Provide a tabbed fly leaf for each separate product and system, with a typed description of the product and major component parts of the equipment.

.7 Text: manufacturer's printed data, or typewritten data.

.8 Drawings: provide with a reinforced punched binder tab. Bind in with the text; fold larger drawings to the size of text pages.

.9 Provide 1:1 scaled CAD files in dwg format on CD.

1.3 CONTENTS - EACH VOLUME

.1 Table of Contents: provide:

.1 Title of project;
.2 Date of submission; names.
.3 Addresses, and telephone numbers of Consultant and Contractor with name of responsible parties.
.4 Schedule of products and systems, indexed to content of volume.

.2 For each product or system: List names, addresses and telephone numbers of subcontractors and suppliers, including local source of supplies and replacement parts.

.3 Product Data: mark each sheet to identify specific products and component parts, and data applicable to installation; delete inapplicable information.

.4 Drawings: supplement product data to illustrate relations of component parts of equipment and systems, to show control and flow diagrams.

.5 Typewritten Text: as required to supplement product data. Provide logical sequence of instructions for each procedure, incorporating manufacturer's instructions specified in Section 01 45 00 "Quality Control".

1.4 AS-BUILTS AND SAMPLES

.1 Maintain at the site for one record copy of:
.1 Contract Drawings.
.2 Specifications.
.3 Addenda.
.4 Change Orders and other modifications to Contract.
.5 Reviewed shop drawings, product data, and samples.
.6 Field test records.
.7 Inspection certificates.
.8 Manufacturer's certificates.

.2 Store record documents and samples in the field office, apart from documents used for construction. Provide files, racks, and secure storage.

.3 Label record documents and file in accordance with the Section number listings in the List of Contents of this Project Manual. Label each document "PROJECT RECORD" in neat, large, printed letters.

.4 Maintain record documents in clean, dry and legible condition. Do not use record documents for construction purposes.

.5 Keep record documents and samples available for inspection by the Consultant.

1.5 RECORDING ACTUAL SITE CONDITIONS

.1 Record information on a set of black line opaque drawings, and in a copy of the Project Manual, provided by the Consultant.

.2 Provide felt tip marking pens, maintaining separate colours for each major system, for recording information.

.3 Record information concurrently with construction progress. Do not conceal work until required information is recorded.

.4 Contract Drawings and shop drawings: mark each item to record actual construction, including:

.1 Measured depths of elements of foundation in relation to finish first floor datum.
.2 Measured horizontal and vertical locations of underground utilities and appurtenances, referenced to permanent surface improvements.
.3 Measured locations of internal utilities and appurtenances, referenced to visible and accessible features of construction.
.4 Field changes of dimension and detail.
.5 Changes made by change orders.
.6 Details not on original Contract Drawings.
.7 References to related shop drawings and modifications.

.5 Specifications: mark each item to record actual construction, including:
.1 Manufacturer, trade name, and catalogue number of each product actually installed, particularly optional items and substitute items.
.2 Changes made by Addenda and change orders.

.6 Other Documents: maintain manufacturer's certifications, inspection certifications, and field test records required by individual specification sections.

1.6 FINAL SURVEY

.1 Submit final site survey certificate in accordance with Section 01 71 00 "Examination and Preparation" certifying that elevations and locations of completed work are in conformance or non-conformance with the Contract Documents.

1.7 EQUIPMENT AND SYSTEMS

.1 Each Item of Equipment and Each System: include description of unit or system, and component parts. Give function, normal operation characteristics, and limiting conditions. Include performance curves, with engineering data and tests, and complete nomenclature and commercial number of replaceable parts.

.2 Panel board circuit directories: provide electrical service characteristics, controls, and communications.

.3 Include installed colour coded wiring diagrams.

.4 Operating Procedures: include start-up, break-in, and routine normal operating instructions and sequences. Include regulation, control, stopping, shut-down, and emergency instructions. Include summer, winter, and any special operating instructions.

.5 Maintenance Requirements: include routine procedures and guide for trouble-shooting; disassembly, repair, and reassembly instructions; and alignment, adjusting, balancing, and checking instructions.

.6 Provide servicing and lubrication schedule, and list of lubricants required.

.7 Include manufacturer's printed operation and maintenance instructions.

.8 Include sequence of operation by controls manufacturer.

.9 Provide original manufacturer's parts list, illustrations, assembly drawings, and diagrams required for maintenance.

.10 Provide installed control diagrams by controls manufacturer.

.11 Provide Contractor's co-ordination drawings, with installed colour coded piping diagrams.

.12 Provide charts of valve tag numbers, with location and function of each valve, keyed to flow and control diagrams.

.13 Provide list of original manufacturer's spare parts, current prices, and recommended quantities to be maintained in storage.

.14 Include test and balancing reports as specified in Section 01 45 00 "Quality Control" and 01 91 13 "General Commissioning (Cx) Requirements".

.15 Additional requirements: as specified in individual specification sections.

1.8 MATERIALS AND FINISHES

.1 Building Products, Applied Materials, and Finishes: include product data, with catalogue number, size, composition, and colour and texture designations. Provide information for re-ordering custom manufactured products.

.2 Instructions for cleaning agents and methods, precautions against detrimental agents and methods, and recommended schedule for cleaning and maintenance.

.3 Moisture-Protection and Weather-Exposed Products: include manufacturer's recommendations for cleaning agents and methods, precautions against detrimental agents and methods, and recommended schedule for cleaning and maintenance.

.4 Additional Requirements: as specified in individual specifications sections.

1.9 SPARE PARTS

.1 Provide spare parts, in quantities specified in individual specification sections.

.2 Provide items of the same manufacture and quality as items in the work.

.3 Deliver to the site; place and store.

.4 Receive and catalogue items. Submit an inventory listing to the Consultant. Include approved listings in the Maintenance Manual.

.5 Obtain receipts for delivered products and submit prior to final payment.

1.10 MAINTENANCE MATERIALS

.1 Provide maintenance and extra materials, in the quantities specified in the individual specification sections.

.2 Provide items of the same manufacture and quality as items in the work.

.3 Deliver to the site; place and store.

.4 Receive and catalogue the items. Submit an inventory listing to the Consultant. Include approved listings in the Maintenance Manual.

.5 Obtain receipts for delivered products and submit prior to final payment.

1.11 SPECIAL TOOLS

.1 Provide special tools, in the quantities specified in the individual specification sections.

.2 Provide items with tags identifying their associated function and equipment.

.3 Deliver to the site; place and store.

.4 Receive and catalogue items. Submit an inventory listing to the Consultant. Include approved listings in the Maintenance Manual.

1.12 STORAGE, HANDLING AND PROTECTION

.1 Store spare parts, maintenance materials, and special tools in a manner which will prevent damage or deterioration.

.2 Store in original and undamaged condition with manufacturer's seal and labels intact.

.3 Store components subject to damage from weather in weatherproof enclosures.

.4 Store paints and freezable materials in a heated and ventilated room.

.5 Remove and replace damaged products at own expense and to the satisfaction of the Consultant.

1.13 WARRANTIES AND BONDS

.1 Develop a warranty management plan to contain information relevant to Warranties.

.2 Submit the warranty management plan, 30 days before the planned pre-warranty conference, to the Consultant approval.

.3 The warranty management plan to include required actions and documents to ensure that the Owner receives the warranties to which it is entitled.

.4 Provide the plan in narrative form and include sufficient detail to make it suitable for use by future maintenance and repair personnel.

.5 Submit, warranty information made available during the construction phase, to the Consultant for approval prior to each monthly payment claim.

.6 Assemble approved information in a binder and submit upon acceptance of the work. Organize the binder as follows:
- .1 Separate each warranty or bond with index tab sheets keyed to the Table of Contents listing.
- .2 List subcontractor, supplier, and manufacturer, with name, address, and telephone number of responsible principal.
- .3 Obtain warranties and bonds, executed in duplicate by subcontractors, suppliers, and manufacturers, within 10 days after completion of the applicable item of work.
- .4 Verify that documents are in proper form, contain full information, and are notarized.
- .5 Co-execute submittals when required.
- .6 Retain warranties and bonds until the time specified for submittal.

.7 Except for items put into use with the Owner's permission, leave date of the beginning of the time of warranty until the date of Substantial Performance is determined.

.8 Conduct joint 4 month and 9 month warranty inspections, measured from the time of acceptance by

the Consultant.

.9 Include the following information contained in the warranty management plan:
- .1 Roles and responsibilities of personnel associated with the warranty process, including points of contact and telephone numbers within the organizations of the Contractors, subcontractors, manufacturers, or suppliers involved.
- .2 Listing and status of delivery of Certificates of Warranty for extended warranty items, to include roofs, HVAC balancing, pumps, motors, transformers, and commissioned systems such as fire protection, alarm systems, sprinkler systems, lightning protection systems,].
- .3 Provide list for each warranted equipment, item, feature of construction or system indicating:
  - .1 Name of item.
  - .2 Model and serial numbers.
  - .3 Location where installed.
  - .4 Name and phone numbers of manufacturers or suppliers.
  - .5 Names, addresses and telephone numbers of sources of spare parts.
  - .6 Warranties and terms of warranty: include one-year overall warranty of construction. Indicate items that have extended warranties and show separate warranty expiration dates.
  - .7 Cross-reference to warranty certificates as applicable.
  - .8 Starting point and duration of warranty period.
  - .9 Summary of maintenance procedures required to continue warranty in force.
  - .10 Cross-Reference to specific pertinent Operation and Maintenance manuals.
  - .11 Organization, names and phone numbers of persons to call for warranty service.
  - .12 Typical response time and repair time expected for various warranted equipment.
- .4 Contractor's plans for attendance at 4 and 9 month post-construction warranty inspections.
- .5 Procedure and status of tagging of equipment covered by extended warranties.
- .6 Where proper operation is critical for warranty and/or safety reasons, post copies of instructions near selected pieces of equipment.

.10 Respond in a timely manner to oral or written notification of required construction warranty repair work.

.11 Written verification will follow oral instructions. Failure to respond will be cause for the Owner to proceed with action against the Contractor.

1.14 PRE-WARRANTY CONFERENCE

.1 Meet with the Consultant to develop an understanding of the requirements of this section. Schedule a meeting prior to contract completion, and at a time designated by the Consultant.

.2 The Consultant will establish communication procedures for:
- .1 Notification of construction warranty defects.
- .2 Determine priorities for type of defect.
- .3 Determine reasonable time for response.

.3 Provide the name, telephone number and address of a licensed and bonded company that is authorized to initiate and pursue construction warranty work action.

.4 Ensure the contact is located within the local service area of the warranted construction, is continuously available, and is responsive to inquiries for warranty work action.

1.15 WARRANTY TAGS

.1 Tag, at time of installation of each warranted item, provide a durable, oil and water resistant tag approved by the Consultant.

.2 Attach tags with copper wire and spray with waterproof silicone coating.

.3 Leave the date of acceptance until project is accepted for occupancy.

.4 Indicate following information on the tag:
- .1 Type of product/material.
- .2 Model number.
- .3 Serial number.
- .4 Contract number.
- .5 Warranty period.
- .6 Inspector's signature.
- .7 Construction Contractor.

END OF SECTION

PART 1 GENERAL

1.1 ADMINISTRATIVE REQUIREMENTS

.1 Demonstrate operation and maintenance of equipment and systems to Owner's personnel two weeks prior to date of final inspection.

.2 Owner: provide list of personnel to receive instructions, and co-ordinate their attendance at agreed-upon times.

.3 Preparation:
- .1 Verify conditions for demonstration and instructions comply with requirements.
- .2 Verify designated personnel are present.
- .3 Ensure testing, adjusting, and balancing has been performed in accordance with Section 01 91 13 - General Commissioning (Cx) Requirements and equipment and systems are fully operational.

.4 Demonstration and Instructions:
- .1 Demonstrate start-up, operation, control, adjustment, trouble-shooting, servicing, and maintenance of each item of equipment at agreed upon times, at the designated location.
- .2 Instruct personnel in phases of operation and maintenance using operation and maintenance manuals as basis of instruction.
- .3 Review contents of manual in detail to explain aspects of operation and maintenance.
- .4 Prepare and insert additional data in operations and maintenance manuals when needed during instructions.

1.2 ACTION AND INFORMATIONAL SUBMITTALS

.1 Provide submittals in accordance with Section 01 33 00 - Submittal Procedures.

.2 Submit schedule of time and date for demonstration of each item of equipment and each system two weeks prior to designated dates, Consultant's approval.

.3 Submit reports within one week after completion of demonstration, that demonstration and instructions have been satisfactorily completed.

.4 Give time and date of each demonstration, with list of persons present.

.5 Provide copies of completed operation and maintenance manuals for use in demonstrations and instructions.

1.3 QUALITY ASSURANCE

.1 When specified in individual Sections requiring manufacturer to provide authorized representative to demonstrate operation of equipment and systems:
- .1 Instruct Owner's personnel.
- .2 Provide written report that demonstration and instructions have been completed.

END OF SECTION

PART 1 GENERAL

1.1 SUMMARY

.1 Section Includes:
- .1 General requirements relating to commissioning of project's components and systems, specifying general requirements to PV of components, equipment, sub-systems, systems, and integrated systems.

.2 Acronyms:
- .1 AFD - Alternate Forms of Delivery, service provider.
- .2 BMM - Building Management Manual.
- .3 Cx - Commissioning.
- .4 EMCS - Energy Monitoring and Control Systems.
- .5 O&M - Operation and Maintenance.
- .6 PI - Product Information.
- .7 PV - Performance Verification.
- .8 TAB - Testing, Adjusting and Balancing.

1.2 GENERAL

.1 Cx is a planned program of tests, procedures and checks carried out systematically on systems and integrated systems of the finished Project. Cx is performed after systems and integrated systems are completely installed, functional and Contractor's Performance Verification responsibilities have been completed and approved. Objectives:
- .1 Verify installed equipment, systems and integrated systems operate in accordance with contract documents and design criteria and intent.
- .2 Ensure appropriate documentation is compiled into the BMM.
- .3 Effectively train O&M staff.

.2 Contractor assists in Cx process, operating equipment and systems, troubleshooting and making adjustments as required.
- .1 Systems to be operated at full capacity under various modes to determine if they function correctly and consistently at peak efficiency. Systems to be interactively with each other as intended in accordance with Contract Documents and design criteria.
- .2 During these checks, adjustments to be made to enhance performance to meet environmental or user requirements.

.3 Design Criteria: as per client's requirements or determined by designer. To meet Project functional and operational requirements.

1.3 COMMISSIONING OVERVIEW

.1 Cx to be a line item of Contractor's cost breakdown.

.2 Cx activities supplement field quality and testing procedures described in relevant technical sections.

.3 Cx is conducted in concert with activities performed during stage of project delivery. Cx identifies issues in Planning and Design stages which are addressed during Construction and Cx stages to ensure the built systems is constructed and proven to operate satisfactorily under weather, environmental and occupancy conditions to meet functional and operational requirements. Cx activities includes transfer of critical knowledge to facility operational personnel.

.4 Consultant will issue Interim Acceptance Certificate when:
- .1 Completed Cx documentation has been received, reviewed for suitability and approved by Consultant.
- .2 Equipment, components and systems have been commissioned.
- .3 O&M training has been completed.

1.4 NON-CONFORMANCE TO PERFORMANCE VERIFICATION REQUIREMENTS

.1 Should equipment, system components, and associated controls be incorrectly installed or malfunction during Cx, correct deficiencies, re-verify equipment and components within the unfunctional system, including related systems as deemed required Consultant, to ensure effective performance.

.2 Costs for corrective work, additional tests, inspections, to determine acceptability and proper performance of such items to be borne by Contractor. Above costs to be in form of progress payment reductions or hold-back assessments.

1.5 PRE-CX REVIEW

.1 Before Construction:
- .1 Review contract documents, confirm by writing to Consultant.
  - .1 Adequacy of provisions for Cx.
  - .2 Aspects of design and installation pertinent to success of Cx.

.2 .2 During Construction:
- .1 Co-ordinate provision, location and installation of provisions for Cx.

.3 Before start of Cx:
- .1 Have completed Cx Plan up-to-date.
- .2 Ensure installation of related components, equipment, sub-systems, systems is complete.
- .3 Fully understand Cx requirements and procedures.
- .4 Have Cx documentation shelf-ready.
- .5 Understand completely design criteria and intent and special features.
- .6 Submit complete start-up documentation to Consultant
- .7 Have Cx schedules up-to-date.
- .8 Ensure systems have been cleaned thoroughly.
- .9 Complete TAB procedures on systems, submit TAB reports to Consultant for review and approval.
- .10 Ensure "As-Built" system schematics are available.

.4 Inform Consultant in writing of discrepancies and deficiencies on finished works.

1.6 1.06 CONFLICTS

.1 Report conflicts between requirements of this section and other sections to Consultant before start-up and obtain clarification.

.2 Failure to report conflict and obtain clarification will result in application of most stringent requirement.

1.7 ACTION AND INFORMATIONAL SUBMITTALS

.1 Submittals: in accordance with Section 01 33 00 - Submittal Procedures.
- .1 Submit no later than 4 weeks after award of Contract:
  - .1 Name of Contractor's Cx agent.

.2 Draft Cx documentation.
.3 Preliminary Cx schedule.

.2 Request in writing to Consultant for changes to submittals and obtain written approval at least 8 weeks prior to start of Cx.

.3 Submit proposed Cx procedures to Consultant where not specified and obtain written approval at least 8 weeks prior to start of Cx.

.4 Provide additional documentation relating to Cx process required by Consultant

1.8 COMMISSIONING DOCUMENTATION

.1 Consultant to review and approve Cx documentation.

.2 Provide completed and approved Cx documentation to Consultant

1.9 COMMISSIONING SCHEDULE

.1 Provide detailed Cx schedule as part of construction schedule in accordance with Section 01 32 16. - Construction Progress Schedule - Critical Path Method (CPM).

.2 Provide adequate time for Cx activities prescribed in technical sections and commissioning sections including:
.1 Approval of Cx reports.
.2 Verification of reported results.
.3 Repairs, retesting, re-commissioning, re-verification.
.4 Training.

1.10 COMMISSIONING MEETINGS

.1 Convene Cx meetings following project meetings.

.2 Purpose: to resolve issues, monitor progress, identify deficiencies, relating to Cx.

.3 Continue Cx meetings on regular basis until commissioning deliverables have been addressed.

.4 At 60% construction completion stage. Consultant to call a separate Cx scope meeting to review progress, discuss schedule of equipment start-up activities and prepare for Cx. Issues at meeting to include:
.1 Review duties and responsibilities of Contractor and subcontractors, addressing delays and potential problems.
.2 Determine the degree of involvement of trades and manufacturer's representatives in the commissioning process.

.5 Thereafter Cx meetings to be held until project completion and as required during equipment start-up and functional testing period.

.6 Meeting will be chaired by Consultant Contractor Cx Agent, who will record and distribute minutes.

.7 Ensure subcontractors and relevant manufacturer representatives are present at 60% and subsequent Cx meetings and as required.

1.11 STARTING AND TESTING

.1 Contractor assumes liabilities and costs for inspections. Including disassembly and re-assembly after approval, starting, testing and adjusting, including supply of testing equipment.

1.12 1.12 WITNESSING OF STARTING AND TESTING

.1 Provide 14 days notice prior to commencement.

.2 Consultant to witness of start-up and testing.

.3 .3 Contractor's Cx Agent to be present at tests performed and documented by sub-trades, suppliers and equipment manufacturers.

1.13 MANUFACTURER'S INVOLVEMENT

.1 Factory testing: manufacturer to:
- .1 Coordinate time and location of testing.
- .2 Provide testing documentation for approval by Consultant
- .3 Arrange for Consultant to witness tests.
- .4 Obtain written approval of test results and documentation from Consultant before delivery to site.

.2 Obtain manufacturers installation, start-up and operations instructions prior to start-up of components, equipment and systems and review with Consultant
- .1 Compare completed installation with manufacturer's published data, record discrepancies, and review with manufacturer.
- .2 Modify procedures detrimental to equipment performance and review same with manufacturer before start-up.

.3 Integrity of warranties:
- .1 Use manufacturer's trained start-up personnel where specified elsewhere in other divisions or required to maintain integrity of warranty.
- .2 Verify with manufacturer that testing as specified will not void warranties.

.4 Qualifications of manufacturer's personnel:
- .1 Experienced in design, installation and operation of equipment and systems.
- .2 Ability to interpret test results accurately.
- .3 To report results in clear, concise, logical manner.

1.14 PROCEDURES

.1 Verify that equipment and systems are complete, clean, and operating in normal and safe manner prior to conducting start-up, testing and Cx.

.2 Conduct start-up and testing in following distinct phases:
- .1 Included in delivery and installation:
  - .1 Verification of conformity to specification, approved shop drawings and completion of PI report forms.
  - .2 Visual inspection of quality of installation.
- .2 Start-up: follow accepted start-up procedures.
- .3 Operational testing: document equipment performance.
- .4 System PV: include repetition of tests after correcting deficiencies.
- .5 Post-substantial performance verification: to include fine-tuning.

.3 Correct deficiencies and obtain approval from Consultant after distinct phases have been completed and before commencing next phase.

.4 Document require tests on approved PV forms.

.5 Failure to follow accepted start-up procedures will result in re-evaluation of equipment by an independent testing agency selected by Consultant. If results reveal that equipment start-up was not in accordance with requirements, and resulted in damage to equipment, implement following:
- .1 Minor equipment/systems: implement corrective measures approved by Consultant
- .2 Major equipment/systems: if evaluation report concludes that damage is minor, implement corrective measures approved by Consultant
- .3 If evaluation report concludes that major damage has occurred, Consultant shall reject equipment.
  - .1 Rejected equipment to be remove from site and replace with new.
  - .2 Subject new equipment/systems to specified start-up procedures.

1.15 START-UP DOCUMENTATION

.1 Assemble start-up documentation and submit to Consultant for approval before commencement of commissioning.

.2 Start-up documentation to include:
- .1 Factory and on-site test certificates for specified equipment.
- .2 Pre-start-up inspection reports.
- .3 Signed installation/start-up check lists.
- .4 Start-up reports,
- .5 Step-by-step description of complete start-up procedures, to permit Consultant to repeat start-up at any time.

1.16 OPERATION AND MAINTENANCE OF EQUIPMENT AND SYSTEMS

.1 After start-up, operate and maintain equipment and systems as directed by equipment/system manufacturer.

.2 With assistance of manufacturer develop written maintenance program and submit Consultant for approval before implementation.

.3 Operate and maintain systems for length of time required for commissioning to be completed.

.4 After completion of commissioning, operate and maintain systems until issuance of certificate of interim acceptance.

1.17 TEST RESULTS

.1 If start-up, testing and/or PV produce unacceptable results, repair, replace or repeat specified starting and/or PV procedures until acceptable results are achieved.

.2 Provide manpower and materials, assume costs for re-commissioning.

1.18 START OF COMMISSIONING

.1 Notify Consultant at least 21 days prior to start of Cx.

.2 Start Cx after elements of building affecting start-up and performance verification of systems have been completed.

1.19 INSTRUMENTS / EQUIPMENT

.1 Submit to Consultant for review and approval:
- .1 Complete list of instruments proposed to be used.

.2 Listed data including, serial number, current calibration certificate, calibration date, calibration expiry date and calibration accuracy.

.2 Provide the following equipment as required:
.1 2-way radios.
.2 Ladders.
.3 Equipment as required to complete work.

1.20 COMMISSIONING PERFORMANCE VERIFICATION

.1 Carry out Cx:
.1 Under accepted simulated operating conditions, over entire operating range, in all modes.
.2 On independent systems and interacting systems.

.2 Cx procedures to be repeatable and reported results are to be verifiable.

.3 Follow equipment manufacturer's operating instructions.

.4 EMCS trending to be available as supporting documentation for performance verification.

1.21 WITNESSING COMMISSIONING

.1 Consultant to witness activities and verify results.

1.22 AUTHORITIES HAVING JURISDICTION

.1 Where specified start-up, testing or commissioning procedures duplicate verification requirements of authority having jurisdiction, arrange for authority to witness procedures so as to avoid duplication of tests and to facilitate expedient acceptance of facility.

.2 Obtain certificates of approval, acceptance and compliance with rules and regulation of authority having jurisdiction.

.3 Provide copies to Consultant within 5 days of test and with Cx report.

1.23 EXTRAPOLATION OF RESULTS

.1 Where Cx of weather, occupancy, or seasonal-sensitive equipment or systems cannot be conducted under near-rated or near-design conditions, extrapolate part-load results to design conditions when approved by Consultant in accordance with equipment manufacturer's instructions, using manufacturer's data, with manufacturer's assistance and using approved formulae.

1.24 EXTENT OF VERIFICATION

.1 Provide manpower and instrumentation to verify up to 30 % of reported results, unless specified otherwise in other sections.

.2 Number and location to be at discretion of Consultant

.3 Conduct tests repeated during verification under same conditions as original tests, using same test equipment, instrumentation.

.4 Review and repeat commissioning of systems if inconsistencies found in more than 20% of reported results.

.5 Perform additional commissioning until results are acceptable to Consultant

1.25 REPEAT VERIFICATIONS

.1 Assume costs incurred by Consultant for third and subsequent verifications where:
- .1 Verification of reported results fail to receive Consultant's approval.
- .2 Repetition of second verification again fails to receive approval.
- .3 Consultant deems Contractor's request for second verification was premature.

1.26 SUNDRY CHECKS AND ADJUSTMENTS

.1 Make adjustments and changes which become apparent as Cx proceeds.

.2 Perform static and operational checks as applicable and as required.

1.27 DEFICIENCIES, FAULTS, DEFECTS

.1 Correct deficiencies found during start-up and Cx to satisfaction of Consultant

.2 Report problems, faults or defects affecting Cx to Consultant in writing. Stop Cx until problems are rectified. Proceed with written approval from Consultant

1.28 COMPLETION OF COMMISSIONING

.1 Upon completion of Cx leave systems in normal operating mode.

.2 Except for warranty and seasonal verification activities specified in Cx specifications, complete Cx prior to issuance of Interim Certificate of Completion.

.3 Cx to be considered complete when contract Cx deliverables have been submitted and accepted by Consultant

1.29 ACTIVITIES UPON COMPLETION OF COMMISSIONING

.1 When changes are made to baseline components or system settings established during Cx process, provide updated Cx form for affected item.

1.30 TRAINING

.1 In accordance with Section 01 79 00 – Demonstration and Training.

1.31 MAINTENANCE MATERIALS, SPARE PARTS, SPECIAL TOOLS

.1 Supply, deliver, and document maintenance materials, spare parts, and special tools as specified in contract.

1.32 OCCUPANCY

.1 Cooperate fully with Consultant during stages of acceptance and occupancy of facility.

1.33 INSTALLED INSTRUMENTATION

.1 Use instruments installed under Contract for TAB and PV if:
- .1 Accuracy complies with these specifications.
- .2 Calibration certificates have been deposited with Consultant

.2 Calibrated EMCS sensors may be used to obtain performance data provided that sensor calibration has been completed and accepted.

1.34 PERFORMANCE VERIFICATION TOLERANCES

.1 Application tolerances:
.2 Specified range of acceptable deviations of measured values from specified values or specified design criteria.

.2 Instrument accuracy tolerances:
.1 To be of higher order of magnitude than equipment or system being tested.

.3 Measurement tolerances during verification:
.1 Unless otherwise specified actual values to be within +/- 2 % of recorded values.

1.35 OWNER'S PERFORMANCE TESTING

.1 Performance testing of equipment or system by Consultant will not relieve Contractor from compliance with specified start-up and testing procedures.

END OF SECTION

PART 1 GENERAL

1.1 RELATED WORK SPECIFIED ELSEWHERE

.1 Concrete Reinforcement: Section 03 32 00

.2 Cast-in-Place Concrete: Section 03 33 00

1.2 REFERENCE STANDARDS

.1 Do concrete floor finishing to CAN/CSA-A23.1-94, except where specified otherwise.

.2 Conform to Ontario Building Code 2012

PART 2 PRODUCTS

2.1 MATERIALS

.1 Non-metallic floor hardener: premixed, abrasion resistant hardener

.2 Additives and hardeners to be compatible

.3 Curing/sealing compound: clear, breathable, high-performance 100% silane sealer with an oleophobic additive.
  .1 Average dept of penetration: 5 mm.
  .2 Standard of Acceptance: Master Protect H 1001 by BASF. No Substitutes.

PART 3 EXECUTION

3.1 WORKMANSHIP

.1 Steel trowel concrete slabs to be left exposed or to receive resilient flooring or carpeting.

.2 Other concrete slabs to be screeded off to true lines and levels shown and left ready to receive finish. Depress slabs where required and/or indicated.

.3 Where floor drains occur, floors to be level around walls and have a minimum 5mm per metre uniform pitch to drains, unless indicated otherwise.

.4 Coordinate with work of other related trades – Div. 09, 22 and 23 in particular.

3.2 PLAIN FLOOR FINISH (UNEXPOSED)

.1 Roll or tamp concrete to force coarse aggregate into concrete mix, then screed.

.2 Float surface with wood or metal float or with power finishing machine and bring surface to true elevation.

.3 Steel trowel to smooth and even surface.

.4 Follow with second steel trowelling to produce smooth burnished surface to within 6mm tolerance when measured in any direction using 3m straight edge. Do not overtrowel.

.5 Sprinkling of dry cement or dry cement and sand mixture over concrete surfaces is not acceptable.

.6 Apply curing compound in accordance with manufacturer's instructions. Do not use curing compound when slab is to receive bonded finish. Damp curing or other approved method shall then be employed.

.7 Sawcut crack-control joints in slabs on grade to CAN/CSA-A23.1-94 (maximum 24 hours after placement), or as noted on drawings. Seal with joint filler.

.8 After curing and when concrete is dry; seal control joints and joints at junction with vertical surfaces with sealant.

.9 Coordinate with Division 9 requirements.

3.3 FLOOR FINISH (EXPOSED)

.1 Finish concrete floors as per Paragraph 3.2, Clauses .1 to .5, and apply floor hardener at a rate of 3 kg/m2 to manufacturer's instructions.

.2 Apply approved curing/sealing compound to manufacturer's instructions.

.3 Sawcut crack-control joints in slabs on grade to CAN/CSA-A23.1-94 (maximum 24 hours after placement), or as noted on drawings. Seal with joint filler. Coordinate with placement of radiant in-slab heating pipes.

.4 After curing/sealing and when concrete is dry, seal control joints and joints at junction with vertical surfaces with sealant.

.5 Clean surfaces and apply second coat curing/sealing compound before final completion.

END OF SECTION

PART 1 General

1.1. RELATED SECTIONS

.1 03 32 00 – Concrete Reinforcement

.2 03 33 00 – Cast-in-Place Concrete

1.2. REFERENCES

.1 Canadian Standards Association (CSA)
- .1 CAN/CSA- A23.1-14, Concrete Materials and Methods of Concrete Construction.
- .2 CAN/CSA-O86-14, Engineering Design in Wood
- .3 CAN/CSA O121-08(R2013), Douglas Fir Plywood.
- .4 CAN/CSA S269.1-1975 (R2003), Falsework for Construction Purposes.
- .5 CAN/CSA-S269.3-M92 (R2013), Concrete Formwork.

.2 Ontario Ministry of Municipal Affairs & Housing (MMAH)
- .1 Ontario Building Code (2012)

1.3. DESIGN

.1 Design of concrete formwork and falsework shall be the responsibility of the Contractor.

1.4. SHOP DRAWINGS

.1 Submit shop drawings in accordance with Division 1.

.2 Indicate method and schedule of construction, materials, arrangement of joints, ties shores and location of embedded parts including waterstops and anchor bolts.

.3 Each shop drawing submitted shall bear the stamp and signature of a qualified Professional Engineer licensed in the Province of Ontario.

.4 At time of submission, Contractor shall notify Consultant in writing of any deviations in shop drawings from requirements of Contract Documents.

.5 Consultant will review and return shop drawings in accordance with an agreed schedule. Review of the shop drawings by the Consultant is intended as an assistance to the Contractor and does not relieve the Contractor of responsibilities for the completeness and accuracy of the work and conformance with the Contract drawings and specifications.

PART 2 PRODUCTS

2.1 MATERIALS

.1 Formwork materials: Use plywood and wood formwork materials to CSA-O121.

.2 Only new formwork shall be used for exposed concrete surfaces.
- .1 Soffit areas (undersides of slabs) to receive sprayed-on textured finishes are to be considered as exposed.

.3 Exposed Round Concrete Columns:
- .1 Round, spirally wound laminated fiber forms with seamless plastic liner, treated with release material.

.4 Form ties: Use removable or snap-off metal ties, fixed or adjustable length.
- .1 Use only ties with ends removable to a distance of not less than 38mm from the face of the finished concrete.
- .2 Form ties with a removable cone cast in the concrete shall produce a cone hole not more than 25mm in diameter.

.5 Form release agent:
- .1 Use chemically active release agents containing compounds that react with free lime present in concrete to provide water insoluble soaps, preventing concrete from sticking to forms.
- .2 Form release agent shall be non-toxic.

.6 Falsework materials: To CSA S269.1.
- .1 Falsework must be designed by a Professional Engineer in structural engineering practicing in the Province of Ontario.

PART 3 EXECUTION

3.1 FABRICATION AND ERECTION

.1 Verify lines, levels and centres before proceeding with formwork/falsework and ensure dimensions agree with drawings.

.2 Fabricate and erect falsework in accordance with CSA S269.1.

.3 Obtain Consultant's consent before framing openings in slabs, beams, walls or columns not detailed on drawings.

.4 Do not place shores and mud sills on frozen ground. Provide sufficient bearing surface area for proper load distribution.

.5 Fabricate and erect formwork in accordance with CAN/CSA-S269.3 to produce finished concrete conforming to shape, dimensions, locations and levels indicated within tolerances required by CAN/CSA-A23.1. No form ties will be allowed for column construction.

.6 Submit details of any openings not indicated on structural drawings for review by Consultant before framing openings not indicated.

.7 Align form joints and make watertight. Keep form joints to minimum.

.8 Use 20 mm chamfer strips on external corners and/or 20 mm fillets at interior corners of concrete members, joints, unless specified otherwise.

.9 Form chases, slots, openings, drips, recesses, expansion and control joints as indicated.

.10 Build in anchors, sleeves, and other inserts required to accommodate work specified in other sections. Ensure that all anchors and inserts will not protrude beyond surfaces designated to receive applied finishes, including painting.

.11 Use templates to secure and align anchor bolts in formwork prior to placement of the concrete.

Report any interference with reinforcing or other inserts to Consultant prior to the placement of the concrete. Concrete should not be placed until interference issues are resolved in writing by the Consultant.

.12 For walls and shear walls, leave one side of form open for review of reinforcing steel. Close form only after Consultant has reviewed bar placement.

.13 Clean formwork in accordance with CAN/CSA-A23.1 before placing concrete.
.1 Clean forms of all loose debris and other deleterious materials prior to placement of the concrete.

.14 Finished concrete exhibiting excessive form displacement and/or excessive deflection shall be cause for rejection of the work and its removal and replacement at the Contractor's expense.

3.2 CONSTRUCTION JOINTS

.1 Form construction joints where required and where indicated.
.1 Construction joints shall conform to CSA A23.1, Clause 7.3.1.
.2 Construction joint locations to be approved by Consultant in writing prior to performance of work.

.2 Form 2" x 4" bevelled shear keys full length of construction joints, unless detailed otherwise.

3.3 REMOVAL AND RESHORING

.1 Remove forms so that no damage occurs to the concrete.

.2 Consider the location, character of the structure, weather and other conditions influencing the curing of concrete, in determining the time for removal of forms. (Refer to Section 03 33 00 - Cast-In-Place Concrete and CSA-A23.1).

.3 Leave shores in place until concrete has attained sufficient strength to adequately support its own weight together with construction loads likely to be imposed. Minimum periods before removal of formwork to be as follows:
.1 Vertical Surfaces - minimum 3 days.
.2 Columns – minimum 3 days.
.3 Beam soffits, slabs & decks – 28 days, or 3 days when replaced immediately with adequate shoring to standard specified for Falsework AND concrete has reached at least 75% of specified 28 day compressive strength.

.4 Re-use of formwork and falsework subject to requirements of CSA-A23.1.

.5 Provide all necessary reshoring of members where early removal of forms may be required or where members may be subjected to additional loads during construction as required.

.6 Space reshoring in each principal direction at not more than 3m apart.

.7 Take particular care when removing forms to ensure no damage occurs at corners, arises and the like.

.8 To help avoid colour variations in architectural concrete, ensure length of time between concrete placing and form removal is approximately same for each portion of work.

.9 In hot weather, wood forms remaining in place should not be considered adequate for curing but should be removed or loosened so concrete surfaces may be kept moist or coated with curing agent.

.10 In cold weather, defer removal of formwork or insulate formwork, to avoid thermal shock and consequent cracking of concrete surface.

.11 Install tie hole plugs immediately following removal of spreader cones. Install to a snug fit, maximum setback from concrete surface as specified.

.12 When concrete is dry, install temporary polyethylene rope in reglets to prevent contamination of same.

END OF SECTION

PART 1 General

1.1 REFERENCES

.1 American Society for Testing and Materials (ASTM)
- .1 ASTM A775/A775M- 07b(2014), Specification for Epoxy-Coated Reinforcing Steel Bars.

.2 Canadian Standards Association (CSA)
- .1 CAN/CSA-A23.1-14: Concrete Materials and Methods of Concrete Construction.
- .2 CAN/CSA-A23.3-14: Design of Concrete Structures.
- .3 CSA G30.5-M1983 (R1998), Welded Steel Wire Fabric for Concrete Reinforcement
- .4 CAN/CSA-G30.18-M92 (R2007): Billet-Steel Bars for Concrete Reinforcement.

.3 Reinforcing Steel Institute of Canada (RSIC)
- .1 RSIC Reinforcing Steel Manual of Standard Practice (2004)

.4 Ontario Ministry of Municipal Affairs & Housing (MMAH)
- .1 Ontario Building Code (2012)

1.2 SOURCE QUALITY CONTROL

.1 Inform Consultant of proposed source of material to be supplied.

.2 Upon request, submit certified mill test reports of steel reinforcing bars.

1.3 SUBMITTALS

.1 Submit shop drawings for placement of reinforcement in accordance with General Conditions, at least ten (10) days before fabrication.

.2 Indicate on shop drawings bar-bending details, bar schedule, quantities of reinforcement, sizes, spacings, locations of reinforcement splices, and concrete cover, with identifying code marks to permit correct placement without reference to structural drawings. Indicate sizes, spacings and locations of chairs, spacers and hangers.
- .1 Prepare reinforcement drawings in accordance with RISC Reinforcing Steel Manual of Standard Practice.

.3 Detail lap lengths and development lengths to CSA-A23.3, unless otherwise indicated.

1.4 SUBSTITUTES

.1 Substitute different size bars only if permitted in writing by Consultant.

PART 2 Products

2.1 MATERIALS

.1 Reinforcing steel: billet steel deformed bars to CAN/CSA-G30.18, grade 400R.

.2 Welded steel wire fabric: to CSA G30.5. Provide in flat sheets only.

.3 Cold drawn annealed steel wire ties: to CSA G30.3.

.4 Welded steel wire fabric: to CSA G30.5, provide in flat sheets only.

.5 Chairs, bar supports & spacers to CAN/CSA A23.1.
 .1 Only concrete blocks and/or plastic chairs are acceptable.

.6 Anchor and dowel bar adhesive shall be hybrid adhesive consisting of methacrylate resin and hardener.
 .1 Acceptable products: HIT HY-200 or HIT-ICE by Hilti Canada Ltd., or approved equivalent.

2.2 FABRICATION

.1 Fabricate reinforcing steel in accordance with CAN/CSA-A23.1, and Reinforcing Steel Manual of Standard Practice by the Reinforcing Steel Institute of Canada.

.2 Location of reinforcement splices other than those shown on placing drawings only if permitted by Consultant.

2.3 DELIVERY, STORAGE & HANDLING

.1 Ship bar reinforcement in standard bundles, clearly identified in accordance with bar bending details and lists.

.2 Store reinforcement to prevent deterioration or contamination by dirt, detrimental rust, loose scale, paint, oil or other foreign substance likely to destroy or reduce bond.

.3 Do not straighten or re-bend reinforcement in any manner.

.4 Do not use bars kinked or bent by improper handling or storage.

PART 3 Execution

3.1 FIELD BENDING

.1 Do not field bend or field weld reinforcement except where indicated.
 .1 When field bending, bend bars without using heat.
 .2 Replace bars that develop cracks or splits.

3.2 PLACING REINFORCEMENT

.1 Place reinforcing steel as indicated on reviewed placing drawings and in accordance with CSA-A23.1.

.2 Ensure cover to reinforcement is maintained during concrete pour.

.3 Clean reinforcing steel bars prior to placing concrete.

.4 Welding of reinforcement will not be permitted.

.5 Splice reinforcement only as shown on the drawings or approved by the Consultant.
 .1 Bar splices shall conform to CSA-A23.3 (Class B), unless noted.
 .2 Lap adjacent sheets of wire fabric to provide an overlap of at least one cross wire spacing plus

50mm, measured between the outermost cross wires of each sheet.

.6 Support reinforcement as follows:
- .1 Beams, walls, and columns - laterally support reinforcement with supports in pairs on opposite faces.
- .2 Do not use supports that will be forced into the supporting formwork or soil by the weight of the reinforcement or other construction loads.
- .3 Separate layers of bars by precast mortar blocks, bars or equally suitable devices. Do not use pebbles, pieces of broken stone or brick, metal pipe or wooden blocks.
- .4 Do not place bars on layers of fresh concrete as the work progresses or install bars during placing of concrete.

.7 Corner Bars: Install corners bars in walls and beams to match the larger size of normal reinforcement unless otherwise noted on the drawings.

.8 Where reinforcement is drilled and grouted into existing concrete or bedrock, reinforcement shall be secured using specified adhesive in strict accordance with manufacturer's written instructions. Clean holes before injection of adhesive.
- .1 Unless noted on Construction Drawings or elsewhere in these Specifications, obtain Consultant's approval before drilling and grouting reinforcement.

3.3 INSPECTION

.1 Notify Consultant to permit inspection after placement is completed. Reinforcing for all concrete pours shall be inspected and approved after placing and prior to concreting.

.2 Provide adequate notice of scheduled pours to facilitate inspection of reinforcement (minimum of 48 hours).

END OF SECTION

PART 1 General

1.1 RELATED SECTIONS

.1 03 31 00 – Concrete Formwork & Accessories

.2 03 32 00 – Concrete Reinforcing

1.2 REFERENCES

.1 American Society for Testing and Materials (ASTM):
- .1 ASTM C309-11, Specification for Liquid Membrane-Forming Compounds for Curing Concrete.
- .2 ASTM C260/C260M-10a, Specifications for Air-Entraining Admixtures for Concrete
- .3 ASTM C494, Specification for Concrete Admixtures for Concrete.
- .4 ASTM C1017/C1017M-13, Specification for Chemical Admixtures for use in Producing Flowing Concrete.
- .5 ASTM D1751-04(2013), Standard Specification for Preformed Expansion Joint Filler for Concrete Paving and Structural Construction (Nonextruding and Resilient Bituminous Types)

.2 Canadian Standards Association (CSA)
- .1 CAN/CSA-A3000-13, Cementitious Materials Compendium.
- .2 CAN/CSA-A23.1-14, Concrete Materials and Methods of Concrete Construction.
- .3 CAN/CSA-A23.2-14, Methods of Test for Concrete.
- .4 CSA-A23.3-14, Design of Concrete Structures.

.3 Canadian General Standards Board (CGSB)
- .1 CAN/CGSB-19.24-M90, Multicompound, Chemical Curing Sealing Compound.

.4 Ontario Ministry of Municipal Affairs & Housing (MMAH)
- .1 Ontario Building Code (2012)

1.3 SUBMITTALS

.1 Submittals shall be in accordance with Division 1 and as specified herein:
- .1 Submit mix designs for review at least 10 days in advance of concreting.
- .2 Submit samples of aggregates, water and cement to be used, to an approved testing agency, if requested by the Consultant.
- .3 If changes to the construction sequences and joint locations are proposed, submit schedule of proposed construction joints to the Consultant for review.
- .4 Submit mill certificates for cement and supplementary cementing materials, if requested by Consultant.
- .5 Submit details of proposed product substitutions (if any) with technical data sheets to demonstrate equivalency to product specified before proceeding with the work.

PART 2 PRODUCTS

2.1 MATERIALS

.1 Portland cement: to CAN/CSA-A3001. Type GU or GUb unless indicated otherwise on Contract Drawings.

.2 Blended hydraulic cements: to CAN/CSA A3001-03.

.3 Other cementing materials: to CAN/CSA-A3000 & A23.1.

.4 Liquid Curing/Sealing Compound: Conforming to ASTM C309 Type 1, Class B and CAN/CSA-A23.1-M, water based acrylic curing/sealing compound.
   .1 Acceptable products: Acryseal WB by Conchem Lafarge; Masterseal W by Master Builders Technologies Limited; Florseal W.B. by Sternson; Sealtight Intex by W.R. Meadows of Canada Ltd (or approved equivalent).

.5 Grout: High performance non-shrink cementitious grout.
   .1 Acceptable products: Sika Grout 212 or equivalent, unless noted otherwise.

.6 PVC Waterstop: WR Meadows Sealtight Type 6380 or approved equivalent.

.7 Dovetail anchor channels: minimum 0.024” thick (24 ga.) galvanized steel with insulation filled slots.

.8 Vapour barrier: 10 mil thick polyethylene, to CGSB 51-GP-51M-81.1.

.9 Premoulded joint filler shall be PVC closed cell foam rigid grade (or approved equivalent), or bituminous impregnated fiberboard to ASTM D1751 as indicated on Contract Drawings.

.10 Joint Sealer: Sikaflex 1A with primer (Sika Canada) or approved equivalent.

.11 Bonding Agent: Sikatop Armatec 110 EpoCem or approved equivalent.

.12 Floor hardener: Non-metallic Type ‘R’ premixed as supplied by WR Meadows or approved equivalent.

.13 Sawcut Control Joint Filler: Euco QwikJoint 200 Polyurea floor joint filler or approved equivalent.

2.2 CONCRETE MIXES

.1 Contractor shall be responsible for concrete mix design.

.2 Proportion concrete in accordance with CAN/CSA-A23.1.

.3 Performance characteristics as indicated on Structural Drawings and as follows:
   .1 Nominal maximum size of coarse aggregate: to CAN/CSA-A23.1.
   .2 Slump: to CAN/CSA-A23.1.
   .3 Do not air entrain concrete to receive floor hardener.
   .4 Admixtures: to CAN/CSA-A23.1.

.4 Do not change concrete mix without prior revision by Consultant. Should change in material source be proposed, Consultant shall review new mix design.

PART 3 EXECUTION

3.1 GENERAL

.1 All concrete work to be in accordance with CSA A23.1/A23.2.

3.2 INSPECTION

.1 The Consultant may review forms, foundations, reinforcing steel, construction joints, mixing, conveying and placing equipment before concreting.
   .1 Provide minimum of 48 hours notice prior to placing concrete.
   .2 Inform Consultant of proposed method(s) for protection of concrete during placing and curing of concrete during adverse weather prior to placing of concrete.

3.3 PREPARATION

.1 Do not place concrete on soil that has been softened by mechanical disturbance or moisture.

.2 Retighten forms at construction joints.

.3 Roughen, thoroughly remove foreign matter and laitance, and saturate the hardened concrete at construction joints with water prior to concreting.

.4 Saturate granular subgrade prior to placing concrete and maintain in damp state until completion of placement operation. Do not place concrete into standing water.

.5 Make suitable arrangements to prevent damage to fresh concrete by adverse weather conditions, such as rain, wind or extreme temperatures.

.6 Concrete shall not be poured against frozen ground, frozen concrete or into frosted formwork or against any surface at a temperature below 5°C.

.7 Prepare all sleeves and ducts to be cast into concrete at the same time as the concrete formwork to ensure that correct assembly and fit is obtained.

.8 Check process, mechanical and electrical drawings for sleeves, inserts, etc.

3.4 SLEEVES AND INSERTS

.1 No sleeves, ducts, pipes or other openings shall pass through beams, column capitals or columns or concentrated wall reinforcing, except where indicated or approved by Consultant in writing.

.2 Where approved by Consultant in writing, set sleeves, ties, pipe hangers and other inserts and openings as indicated or specified elsewhere.
   .1 Sleeves and openings greater than 4” x 4” not indicated, must be approved by Consultant.

.3 Do not eliminate or displace reinforcement to accommodate hardware. If inserts cannot be located as specified, obtain approval of modifications from Consultant before placing of concrete.

.4 Check locations and sizes of sleeves and openings shown on drawings.

3.5 DOVETAIL ANCHOR SLOTS

.1 Install continuous vertical anchor slot to forms where masonry abuts concrete wall or columns.

.2 Install continuous vertical anchor slots at 32” o.c. where concrete walls are masonry faced.

3.6 ANCHOR BOLTS

.1 Set anchor bolts to templates under supervision of appropriate trade prior to placing concrete.

.2 Protect anchor bolt holes from water accumulations, snow and ice build-ups.

3.7 WATERSTOPS

.1 Install waterstops in all construction joints in elevator pit and sumps (whether explicitly indicated on Structural Drawings or not).

.2 Install waterstops in accordance with manufacturer's recommendations to provide continuous seal.

.3 Make straight heat sealed butt joints. All joints to be free of gaps. Ensure ribs run continuously over welded joints.

.4 Do not displace reinforcement when installing.

.5 Tie waterstop to reinforcing cage to prevent deformation during pour.

3.8 VAPOUR BARRIER

.1 Install vapour barrier under concrete slabs on grade inside building.

.2 Lap vapour barrier 6" minimum at joints and seal. Carry up walls to top of slab.

.3 Seal punctures in vapour barrier before placing concrete. Use patching material at least 6" larger than puncture and seal.

3.9 PLACING OF CONCRETE

.1 According to CSA-A23.1, and as specified herein.

.2 All formwork shall be cleaned of all debris, loose material, snow and ice immediately prior to pouring.

.3 Ensure proper placement and support of reinforcement and embedded material immediately ahead of a pour.

.4 Do not temporarily displace reinforcement for convenience in placing concrete.

.5 Do not use wood or other temporary spreaders or spacers.

.6 Do not insert reinforcement into fresh concrete.

.7 Confine concrete in a suitable vertical drop pipe to within 1.0 m or less of the concrete in place.

.8 Set screeds accurately for level surfaces or to maintain cambers as required.

.9 Ensure that concrete is adequately consolidated in the forms.

.10 Place concrete in such a manner that the concrete in the form is still plastic and can be integrated with fresh concrete.

.11 To prevent segregation, deposit concrete in approximately horizontal layers of 300 to 450 mm thickness, as near as possible to its final position.

.12 Maintain accurate records of poured concrete items to indicate date, location of pour, quality, air temperature and test samples taken.

.13 Do not place load upon new concrete until adequate strength has been attained.

3.10 PLACING GROUT

.1 Grout under base and bearing plates using procedures in accordance with manufacturer's written recommendations that result in 100% contact over grouted area.

3.11 COLD WEATHER

.1 When the air temperature is at or below 5°C, or when there is a possibility of it falling to that limit within 24 hours of placing, the requirements according to CSA-A23.1 shall be met.

.2 Calcium chloride to 2% may not be used.

.3 Withdraw protection and heat gradually so that air temperature around the concrete does not drop more than 15°C per day.

.4 Concrete shall be protected from alternate freezing and thawing for 14 days.

.5 Provide enclosures for heating such that air circulation is maintained.

.6 Frozen concrete will be rejected.

3.12 HOT WEATHER

.1 Hot weather shall be considered to be an air temperature in the shade, of 23°C or greater.

.2 Hot weather methods shall conform to CSA-A23.1.

.3 The concrete temperature at the time of placing in hot weather shall not exceed those specified in CSA-A23.1. In the event that this limit is exceeded the concrete operations shall be suspended until the constituent materials of concrete are cooled.

.4 Retarding admixtures shall be used only if approved by the Consultant prior to use in the concrete.

3.13 JOINTS

.1 Construction, and/or control joints shall be provided where required and as shown on the plans or according to CSA-A23.1. Control joints should be spaced at maximum 6 metres or less unless otherwise indicated.

.2 Carefully finish all face edges exposed to view true to line and elevation. Apply a neat cement paste or approved bonding agent to the hardened concrete immediately in advance of the fresh concrete.

.3 Make all construction, or control joints in accordance with details shown on the drawings, layout to be submitted by Contractor for approval by Consultant.

.4 Allow at least 2 hours after placing concrete in supporting columns or walls before placing in beams, girders or slabs above.

.5 Place beams, girders, brackets, column capitals and haunches monolithically with the floor system, unless otherwise approved by the Consultant.

.6 Construction joint layouts shown on the drawings take precedence over above requirements.

3.14 SAWCUT CONTROL JOINTS – SLAB-ON-GRADE

.1 Saw-cut control joints in slab-on-grade as soon has concrete has sufficiently set to avoid ravelling the edges.
- .1 Control joint locations must be coordinated with the tilt-up concrete contractor.
- .2 Control joints to be evenly spaced at maximum 6.0m centres, aligned with columns wherever practical.
- .3 Fill saw-cuts with specified joint sealer/filler in accordance with manufacturers written recommendations.

3.15 FIELD QUALITY CONTROL

.1 Inspection and testing of concrete and concrete materials shall be carried out by an independent Certified Testing Laboratory in accordance with CAN/CSA-A23.1 and A23.2.
- .1 Frequency of tests and number of test cylinders shall be in accordance with CSA A23.2 requirements or as directed by the Engineer or its Site Representative.

.2 Contractor shall provide and maintain adequate facilities for safe storage and proper curing of concrete test specimens on the project site for the initial curing period.
- .1 Adequate facilities shall include a protected, designated area with provision for a continuous power supply to comply with CSA Test Method A23.2-3C.

.3 Concrete Testing Laboratory will be retained and paid for by the Owner.

.4 Consultant may request additional cylinders. Cure cylinders on job site under same conditions as concrete which they represent.

.5 Inspection and/or testing by Consultant will not augment or replace Contractor Quality Control, nor relieve him of contractual responsibilities.

.6 For concrete fails to meet the specification requirements, procedures as outlined in Clause 4.4.6.7 of CSA23.1 shall be followed.

3.16 FINISHING

.1 To CSA-A23.1 and as specified herein.

.2 Steel trowel concrete slabs to be left exposed or to receive resilient flooring or carpeting.

.3 Other concrete slabs to be screeded off to true lines and levels shown and left ready to receive finish. Depress slabs where required.

.4 Where floor drains occur, floors to be level around walls and have a minimum 5mm per metre uniform pitch to drains, unless indicated otherwise.

.5 Exterior walkways, driveways or landings, shall receive a broomed non-slip surface.

.6 Co-ordinate with equipment suppliers regarding additional requirements for tolerances on floor level finishes etc.

.7 Ordinary surface finish (formed surfaces):

.1 Use on concrete surfaces not exposed to view in the completed structure.
.2 Chip off fins and irregular projections.
.3 Patch honeycomb and fill tie holes with mortar containing approved bonding agent. Mix according to manufacturer's directions.

.8 Plain floor finish (not exposed):
.1 Roll or tamp concrete to force coarse aggregate into concrete mix, then screed.
.2 Strike off the compacted concrete to required cross-section and elevation, keeping a slight excess of concrete in front of the screed at all times.
.3 Float surface with wood or metal float or with power finishing machine and bring surface to true elevation.
.4 Steel trowel to smooth and even surface.
.5 Obtain a uniform surface by floating as necessary. If floating is not completed before excess water appears at the surface, remove this water before continuing with floating.
.6 Follow with second steel trowelling to produce smooth burnished surface to within 3mm tolerance when measured in any direction using 10’ straight edge.
.7 Do not overwork the concrete surface. Float only enough to obtain a dense uniform surface.
.8 Sprinkling of dry cement or dry cement and sand mixture over concrete surfaces is not acceptable.
.9 Apply curing compound in accordance with manufacturer's instructions. Do not use curing compound when slab is to receive bonded finish. Damp curing or other approved method shall then be employed.

.9 Exposed Floor Finish:
.1 Finish concrete floors as specified above for plain floor finish (Clauses .1 to .8.8), and apply floor hardener in accordance with manufacturer’s recommendations.
.2 Apply approved curing/sealing compound to manufacturer's instructions.
.3 Sawcut crack-control joints in slabs on grade in accordance with Clause 0.
.4 After curing/sealing and when concrete is dry, seal control joints and joints at junction with vertical surfaces with sealing compound.
.5 Clean surfaces and apply second coat curing/sealing compound before handing building over to Owner.

.10 Broomed finish (exterior exposed surfaces):
.1 After completion of subsection .8 above, broom to produce a non-slip surface with regular corrugations not more than 3 mm deep.

3.17 FLOOR HARDENER

.1 Apply non-metallic floor hardener to floor slab where indicated in strict accordance with manufacturer’s recommendations.
.1 Steel trowel to an even plane surface free from surface marks or voids, avoiding overworking but ensuring that the cement paste is completely wet out for a monolithic surface.

3.18 CURING & SEALING

.1 Cure and protect concrete in accordance with CSA-A23.1. Wet cure fresh concrete when the weather condition and/or the site condition are suitable for this application.

.2 All concrete floor slabs are to be treated with specified curing/sealing compound, except where bond is required by subsequent pours or topping.

3.19 CONSTRUCTION TOLERANCES

.1 Acceptable construction tolerances shall be in accordance with CSA A23.1 Clause 6.4.

3.20 FORM REMOVAL

.1 Refer to Section 03 31 00.

3.21 PATCHING & FINISHING OF HARDENED CONCRETE

.1 Patching, if required and if allowed, shall be done immediately after stripping.

.2 All form ties shall be cut back a minimum of 25 mm and all tie holes shall be neatly patched and rubbed down.

3.22 EQUIPMENT BASES

.1 Install all equipment bases and pads and curbs where shown on the structural, architectural, and or mechanical and electrical drawings.

3.23 BOLLARDS

.1 Fill bollards and pipe guards shown on drawings with concrete.

3.24 HOUSE KEEPING PADS

.1 Install all house keeping pads and all mechanical bases as required. Refer to drawings (including architectural and mechanical/electrical) for locations and sizes.

3.25 CONCRETE SPECIALTIES

.1 Provide and install all concrete specialties as shown on the drawing and/or as necessary to complete the concrete work.

.2 Included are joint fillers, fiberboard, sealant, waterstop and bond breakers, etc.

END OF SECTION

PART 1 General

1.1 REFERENCES

.1 Canadian Standards Association (CSA International)
- .1 CSA-A165 Series-04, Standards on Concrete Masonry Units.
- .2 CSA A179-04, Mortar and Grout for Unit Masonry.
- .3 CSA-A371-04, Masonry Construction for Buildings.

.2 International Masonry Industry All-Weather Council (IMIAC)
- .1 Recommended Practices and Guide Specification for Hot and Cold Weather Masonry Construction.

1.2 ADMINSTRATIVE REQUIREMENTS

.1 Sequencing: sequence with other work in accordance with Construction Progress Schedule - Critical Path Method (CPM) and Construction Progress Schedules - Bar Chart. Comply with manufacturer's written recommendations for sequencing construction operations.

.2 Scheduling: schedule with other work in accordance with Construction Progress Schedule - Critical Path Method (CPM) and Construction Progress Schedules - Bar Chart.

1.3 SUBMITTALS

.1 Provide submittals in accordance with Section 01 33 00 - Submittal Procedures.

.2 Product Data:
- .1 Provide manufacturer's printed product literature, specifications and datasheet and include product characteristics, performance criteria, limitations and colours.
- .2 Provide two copies of Workplace Hazardous Materials Information System (WHMIS) - Material Safety Data Sheets (MSDS). Health and Safety Requirements and Environmental Procedures.

.3 Samples:
- .1 Provide samples as follows:
  - .1 Three of each type of masonry units specified.
  - .2 Three cured, coloured samples of mortar and grout, illustrating mortar colour and colour range, supplemented with specific requirements in Section 04 05 12 - Masonry Mortar and Grout.
  - .3 Three of each type of masonry accessory and flashing specified, supplemented by specific requirements in Section 04 05 23 - Masonry Accessories.
  - .4 Three of each type of masonry anchorage, reinforcement and connector proposed for use, supplemented by specific requirements in Section 04 05 19 - Masonry Anchorage and Reinforcing.
  - .5 Samples: used for testing and when accepted become standard for material used.

.4 Shop Drawings:
- .1 Provide drawings stamped and signed by professional engineer registered or licensed in Province of Ontario, Canada.
- .2 Provide shop drawings detailing temporary bracing required, designed to resist wind pressure and lateral forces during installation.

1.4 INFORMATION SUBMITTALS

.1 Certificates: provide manufacturer's product certificates certifying materials comply with specified requirements.

.2 Test and Evaluation Reports:
- .1 Provide certified test reports for Consultants.
- .2 Test reports to certify compliance of masonry units and mortar ingredients with specified performance characteristics and physical properties.
- .3 Provide data for masonry units, in addition to requirements set out in referenced CSA and ASTM Standards, indicating initial rates of absorption.

.3 Installer Instructions: provide manufacturer's installation instructions, including storage, handling, safety and cleaning.

.4 Manufacturer's Reports: provide written reports prepared by manufacturer's on-site personnel to include:
- .1 Verification of compliance of work with Contract.
- .2 Site visit reports providing detailed review of installation of work, and installed work.

1.5 CLOSEOUT SUBMITTALS

.1 Provide manufacturer's instructions for care, cleaning and maintenance of prefaced masonry units for incorporation into manual specified in Section 01 78 00 - Closeout Submittals.

1.6 EXTRA MATERIALS

.1 Provide manufacturer's instructions in accordance with Section 01 78 00 - Closeout Submittals covering maintenance requirements and parts catalogue, with cuts and identifying numbers.

1.7 QUALITY ASSURANCE

.1 Qualifications:
- .1 Manufacturer: capable of providing field service representation during construction and approving application method.
- .2 Installer: experienced in performing work of this section who has specialized in installation of work similar to that required for this project.
- .3 Masons: company or person specializing in masonry installations with 5 years documented experience with masonry work similar to this project.
  - .1 Masons employed on this project must demonstrate ability to reproduce mock-up standards.

.2 Mock-ups:
- .1 Construct mock-ups in accordance with Section 01 45 00 - Quality Control.
- .2 Construct mock-up panel of exterior interior masonry wall construction 1200 x 1800 mm showing masonry colours and textures, use of reinforcement, ties, through-wall flashing, weep holes, jointing, coursing, mortar and workmanship.
- .3 Mock-up used:
  - .1 To judge workmanship, substrate preparation, operation of equipment and material application.
  - .2 For testing to determine compliance with performance requirements. Perform following tests.
    - .1 For clay units, in addition to requirements set out in referenced CSA and ASTM Standards include data indicating initial rate of absorption.
- .4 Construct mock-up where directed.

.5 Allow 24 hours for inspection of mock-up by Consultant before proceeding with work.
.6 When accepted by Consultant, mock-up will demonstrate minimum standard for this work. Mock-up may not remain as part of finished work.
.7 Start work only upon receipt of written acceptance of mock-up by Consultant. Products.

1.8 DELIVERY, STORAGE AND HANDLING

.1 Deliver materials in accordance with Section 01 61 00 - Common Product Requirements.

.2 Deliver, store and handle materials in accordance with manufacturer's written instructions.

.3 Storage and Handling Protection:
.1 Keep materials dry until use except where wetting of bricks is specified.
.2 Store under waterproof cover on pallets or plank platforms held off ground by means of plank or timber skids.

1.9 SITE CONDITIONS

.1 Ambient Conditions: assemble and erect components when temperatures are above 4 degrees C.

.2 Weather Requirements: to CSA-A371 and IMIAC - Recommended Practices and Guide Specifications for Hot and Cold Weather Masonry Construction.

.3 Cold weather requirements:
.1 To CSA-A371 with following requirements.
.1 Maintain temperature of mortar between 5 degrees C and 50 degrees C until batch is used or becomes stable.
.2 Maintain ambient temperature of masonry work and it's constituent materials between 5 degrees C and 50 degrees C and protect site from windchill.
.3 Maintain temperature of masonry above 0 degrees C for minimum of 28 days, after mortar is installed.
.4 Preheat unheated wall sections in enclosure for minimum 72 hours above 10 degrees C, before applying mortar.

.4 Hot weather requirements:
.1 Protect freshly laid masonry from drying too rapidly, by means of waterproof, non-staining coverings.
.2 Keep masonry dry using waterproof, non-staining coverings that extend over walls and down sides sufficient to protect walls from wind driven rain, until masonry work is completed and protected by flashings or other permanent construction.

.5 Spray mortar surface at intervals and keep moist for maximum of three days after installation.

1.10 WARRANTY

.1 For Work in this Section 04 05 00 - Common Work Results for Masonry, 12 months warranty period is extended to 24 months.

PART 2 Product

2.1 MANUFACTURERS

.1 Ensure manufacturer has minimum 5 years experience in manufacturing components similar to or exceeding requirements of project.

2.2 MATERIALS

.1 Masonry materials are specified in Masonry Sections.

PART 3 Execution

3.1 INSTALLERS

.1 Experienced and qualified masons to carry out erection, assembly and installation of masonry work.

3.2 MANUFACTURER'S INSTRUCTION

.1 Compliance: comply with manufacturer's written data, including product technical bulletins, product catalogue installation instructions, product carton installation instructions, and data sheets.

3.3 EXAMINATION

.1 Examine conditions, substrates and work to receive work of this Section.

.2 Examine openings to receive masonry units. Verify opening size, location, and that opening is square and plumb, and ready to receive work of this Section.
- .1 Inform Consultant of unacceptable conditions immediately upon discovery.
- .2 Proceed with installation after unacceptable conditions have been remedied and after receipt of written approval from Consultant.

.3 Verification of Conditions:
- .1 Verify that:
  - .1 Substrate conditions which have been previously installed under other sections or contracts are acceptable for product installation in accordance with manufacturer's instructions prior to installation of Masonry units.
  - .2 Field conditions are acceptable and are ready to receive work.
  - .3 Built-in items are in proper location, and ready for roughing into masonry work.
- .2 Commencing installation means acceptance of substrates.

3.4 PREPARATION

.1 Surface Preparation: prepare surface in accordance with manufacturer's written recommendations.

.2 Establish and protect lines, levels, and coursing.

.3 Protect adjacent materials from damage and disfiguration.

3.5 INSTALLATION

.1 Do masonry work in accordance with CSA-A371 except where specified otherwise.

.2 Build masonry plumb, level, and true to line, with vertical joints in alignment, respecting construction tolerances permitted by CSA-A371.

.3 Layout coursing and bond to achieve correct coursing heights, and continuity of bond above and below openings, with minimum of cutting.

3.6 CONSTRUCTION

.1 Exposed masonry:
- .1 Remove chipped, cracked, and otherwise damaged units, in accordance with CSA A-165, in exposed masonry and replace with undamaged units.

.2 Jointing:
- .1 Allow joints to set just enough to remove excess water, then tool with round jointer to provide smooth, joints true to line, compressed, uniformly concave joints where concave joints are indicated.
- .2 Allow joints to set just enough to remove excess water, then rake joints uniformly to 6 mm depth and compress with square tool to provide smooth, compressed, raked joints of uniform depth where raked joints are indicated.
- .3 Strike flush joints concealed in walls and joints in walls to receive plaster, tile, insulation, or other applied material except paint or similar thin finish coating.

.3 Cutting:
- .1 Cut out for electrical switches, outlet boxes, and other recessed or built-in objects.
- .2 Make cuts straight, clean, and free from uneven edges.

.4 Building-In:
- .1 Build in items required to be built into masonry.
- .2 Prevent displacement of built-in items during construction. Check plumb, location and alignment frequently, as work progresses.
- .3 Brace door jambs to maintain plumb. Fill spaces between jambs and masonry with mortar.

.5 Wetting of masonry units:
- .1 Except in cold weather, wet bricks having initial rate of absorption exceeding 1 g/minute/1000 mm^2: wet to uniform degree of saturation, 3 to 24 hours before laying, and do not lay until surface dry.
- .2 Wet tops of walls built of bricks qualifying for wetting, when recommencing work on such walls.

.6 Support of loads:
- .1 Use grout to CSA A179 where grout is used in lieu of solid units.
- .2 Install building paper below voids to be filled with grout; keep paper 25 mm back from faces of units.

.7 Provision for movement:
- .1 Leave 3 mm space below shelf angles.
- .2 Leave 6 mm space between top of non-load bearing walls and partitions and structural elements. Do not use wedges.
- .3 Built masonry to tie in with stabilizers, with provision for vertical movement.

.8 Loose steel lintels:
- .1 Install loose steel lintels. Centre over opening width.

.9 Control joints:
- .1 Construct continuous control joints as indicated.

.10 Movement joints:
- .1 Build-in continuous movement joints as indicated.

.11 Interface with other work:
- .1 Cut openings in existing work as indicated.
- .2 Openings in walls: reviewed by Consultant.
- .3 Make good existing work. Use materials to match existing.

.12 Weep Holes:
- .1 Provide partial head joints spaced every 600mm c/c.
- .2 Weep hole vents as per 04 05 23 - Masonry Accessories

3.7 SITE TOLERANCES

.1 Tolerances in notes to CSA-A371 apply.

3.8 FIELD QUALITY CONTROL

.1 Site Tests, Inspection:
- .1 Perform field inspection and testing in accordance with Section 01 45 00 - Quality Control.
- .2 Notify inspection agency minimum of 24 hours in advance of requirement for tests.

.2 Manufacturer's Services:
- .1 Have manufacturer of products supplied under this Section review work involved in handling, installation/application, and protection of its products, and submit written reports in acceptable format to verify compliance of work with Contract.
- .2 Manufacturer's field services: provide manufacturer's field services, consisting of product use recommendations and periodic site visits for inspection of product installation, in accordance with manufacturer's instructions.
- .3 Schedule site visits to review work as installation is about to begin.
- .4 Schedule site visits to review work at stages listed:
  - .1 After delivery and storage of products, and when preparatory work on which work of this Section depends is complete, but before installation begins.
  - .2 Upon completion of work, after cleaning is carried out.
- .5 Obtain reports within three days of review and submit immediately to Consultant.

3.9 CLEANING

.1 Clean in accordance with Section 01 74 11 - Cleaning.

.2 Progress Cleaning: in accordance with related masonry sections.

.3 Final Cleaning:
- .1 Perform cleaning after installation to remove construction and accumulated environmental dirt.
- .2 Upon completion of installation and verification of performance of installation, remove surplus materials, rubbish, tools and equipment barriers.

.4 Waste Management: separate waste materials for reuse and recycling in accordance with Section 01 74 19 - Waste Management and Disposal.
- .1 Divert unused or damaged masonry units and glass block from landfill as specified in Section 01 74 19 - Waste Management and Disposal.

3.10 PROTECTION

.1 Temporary Bracing:
- .1 Provide temporary bracing of masonry work during and after erection until permanent lateral support is in place.

.2 Bracing approved by Consultant.
.3 Brace masonry walls as necessary to resist wind pressure and lateral forces during construction.

.2 Moisture Protection:
.1 Keep masonry dry using waterproof, nonstaining coverings that extend over walls and down sides sufficient to protect walls from wind driven rain, until completed and protected by flashing or other permanent construction.
.2 Cover completed and partially completed work not enclosed or sheltered with waterproof covering at end of each work day. Anchor securely in position.
.3 Air Temperature Protection: protect completed masonry as recommended in (IMIAC) Recommended Practices & Guide Specification for Hot & Cold Weather Masonry Construction.

END OF SECTION

PART 1 General

1.1 REFERENCES

.1 Canadian Standards Association (CSA International)
- .1 CAN/CSA-A23.1/A23.2-04, Concrete Materials and Methods of Concrete Construction/Methods of Test and Standard Practices for Concrete.
- .2 CAN/CSA A179-04, Mortar and Grout for Unit Masonry.
- .3 CAN/CSA A371-04, Masonry Construction for Buildings.
- .4 CAN/CSA-A3000-03, Cementitious Materials Compendium; CAN/CSA-A3002-03, Masonry and Mortar Cement

1.2 ACTION AND INFORMATIONAL SUBMITTALS

.1 Product Data:
- .1 Provide submittals in accordance with Section 01 33 00 – Submittal Procedures.
- .2 Provide manufacturer's printed product literature, specifications and datasheets. Include product characteristics, performance criteria, and limitations.

.2 Samples:
- .1 Samples: provide unit samples in accordance with Section 04 05 00 - Common Work Results for Masonry, supplemented as follows:
  - .1 Provide two samples of available coloured mortar.
  - .2 Provide confirmation of source or product data sheet, prior to mixing or preparation of mortars, to Consultant of:
    - .1 Aggregate sand.
    - .2 Cement.
    - .3 Lime.
    - .4 Colour pigment samples.

.3 Manufacturer's Instructions:
- .1 Provide manufacturer's installation instructions.

1.3 QUALITY ASSURANCE

.1 Pre-Installation Meetings: conduct pre-installation meeting to verify project requirements, manufacturer's installation instructions and manufacturer's warranty requirements.

.2 Mock-ups:
- .1 Construct mock-ups in accordance with Section 01 45 00 - Quality Control and requirements of Section 04 05 00 - Common Work Results for Masonry supplemented as follows:
  - .1 Construct mock-up sample panel of pointing.
  - .2 Sample panel: 3000 mm x 3000 mm using proposed procedures, colours, texture, finish and workmanship.

1.4 DELIVERY, STORAGE AND HANDLING

.1 Deliver, store and handles masonry mortar and grout materials in accordance with Section 01 33 00 submittal procedure, supplemented as follows:
- .1 Deliver prepackaged, dry-blended mortar mix to project site in labelled plastic-lined bags each bearing name and address of manufacturer, production codes or batch numbers, and colour or formula numbers.
- .2 Maintain mortar, grout and packaged materials clean, dry, and protected against dampness, freezing, traffic and contamination by foreign materials.

1.5 SITE CONDITIONS

.1 Ambient Conditions: maintain materials and surrounding air temperature to:
- .1 Minimum 10 degrees C prior to, during, and 48 hours after completion of masonry work.
- .2 Maximum 32 degrees C prior to, during, and 48 hours after completion of masonry work.

.2 Weather Requirements: CAN/CSA A371 International Masonry Industry All-Weather Council (IMIAC) - Recommended Practices and Guide Specifications for Hot and Cold Weather Masonry Construction.

PART 2 Product

2.1 MATERIALS

.1 Use same brands of materials and source of aggregate for entire project.

.2 Cement:
- .1 Portland Cement: to CAN/CSA-A3000,MS - Moderate sulphate-resistant hydraulic cement (Type 20)
  - .1 Use low VOC products in compliance with SCAQMD Rule 1168.
- .2 Masonry Cement: to CAN/CSA-A3002 and CAN/CSA A179, Type N.
- .3 Mortar Cement: to CAN/CSA-A3002 and CAN/CSA A179, Type N.
  - .1 Use low VOC products in compliance with SCAQMD Rule 1168.
- .4 Packaged Dry Combined Materials for mortar: to CAN/CSA A179, Type N, using white colour cement.

.3 Aggregate: supplied by one supplier.
- .1 Fine Aggregate: to CAN/CSA A179, natural sand.

.4 Water: clean and potable.

.5 Lime:
- .1 Hydrated Lime: to CAN/CSA A179, Type S.

.6 Bonding Agent: latex type.

.7 Polymer Latex: organic polymer latex admixture of butadiene-styrene type non-emulsifiable bonding admixture.

2.2 COLOUR ADDITIVES

.1 Use colouring admixture not exceeding 10% of cement content by mass, or integrally coloured masonry cement, to produce coloured mortar to match approved sample. Admixtures to be approved prior to use. Use in accordance with the specific manufacturer's recommendations.

.2 White mortar: use white Portland cement, and lime to produce mortar type specified.

.3 Powder: inorganic mineral oxide pigment; colour as selected by consultant.

2.3 ADMIXTURES

.1 Water Repellent Agents: liquid.
- .1 Use low VOC products in compliance with SCAQMD Rule 1168.

2.4 MORTAR MIXES

.1 Mortar for exterior masonry above grade:
- .1 Loadbearing: type S based on property specifications.
- .2 Non-Loadbearing: N based on property specifications.

.2 Mortar for interior masonry:
- .1 Loadbearing: type N based on property specifications.
- .2 Non-Loadbearing: N based on property specifications.

.3 Pointing Mortar: CAN/CSA A179, Type N using property specification with maximum 2 percent ammonium stearate or calcium stearate per cement weight.

.4 Parging mortar: type N to CAN/CSA A179.

.5 Following applies regardless of mortar types and uses specified above:
- .1 Mortar for calcium silicate brick and concrete brick: type O based on proportion specifications.
- .2 Mortar for stonework: type N based on property specifications.
- .3 Mortar for grouted reinforced masonry: type S based on property specifications.
- .4 Mortar mix to suit manufacturer recommendations for Architectural Concrete Block.

2.5 MORTAR MIXING

.1 Use pre-blended, pre-coloured mortar prepackaged under controlled factory conditions. Ingredients batching limitations to be within 1% accuracy.

.2 Mix mortar ingredients in accordance with CAN/CSA A179 in quantities needed for immediate use.

.3 Maintain sand uniformly damp immediately before mixing process.

.4 Add mortar colour and admixtures in accordance with manufacturer's instructions. Provide uniformity of mix and colouration.

.5 Do not use anti-freeze compounds including calcium chloride or chloride based compounds.

.6 Do not add air entraining admixture to mortar mix.

.7 Use a batch type mixer in accordance with CAN/CSA A179.

.8 Pointing mortar: prehydrate pointing mortar by mixing ingredients dry, then mix again adding just enough water to produce damp unworkable mix that will retain its form when pressed into ball. Allow to stand for not less than 1 hour no more than 2 hours then remix with sufficient water to produce mortar of proper consistency for pointing.

.9 Re-temper mortar only within two hours of mixing, when water is lost by evaporation.

.10 Use mortar within 2 hours after mixing at temperatures of 32 degrees C, or 2-1/2 hours at temperatures under 10 degrees C.

2.6 GROUT MIXES

.1 Bond Beams: grout mix 20 MPa strength at 28 days; 200 mm slump; premixed type in accordance with CAN/CSA-A23.1.

.2 Lintels: grout mix 20 MPa strength at 28 days; 200 mm slump; premixed type in accordance with CAN/CSA-A23.1.

.3 Grout: Minimum compressive strength of 20 MPa at 28 days. Maximum aggregate size and grout slump: CAN/CSA A179.

2.7 GROUT MIXING

.1 Mix batched and delivered grout in accordance with CAN/CSA-A23.1 transit mixed.

.2 Mix grout ingredients in quantities needed for immediate use in accordance with CAN/CSA A179 fine grout.

.3 Add admixtures in accordance with manufacturer's instructions; mix uniformly.

.4 Do not use calcium chloride or chloride based admixtures.

PART 3 Execution

3.1 EXAMINATION

.1 Request inspection of spaces to be grouted.

3.2 PREPARATION

.1 Apply bonding agent to existing concrete surfaces.

.2 Plug clean-out holes with brick & block masonry units. Brace masonry for wet grout pressure.

3.3 MANUFACTURER'S INSTRUCTIONS

.1 Compliance: comply with manufacturer's written data, including product technical bulletins, product catalogue installation instructions, product carton installation instructions, and data sheets.

3.4 CONSTRUCTION

.1 Do masonry mortar and grout work in accordance with CAN/CSA A179 except where specified otherwise.

.2 Apply parging in uniform coating not less than total 10 mm thick , where indicated.

3.5 MIXING

.1 All pointing mortar can be mixed using a regular paddle mixer. Only electric motor mixers are permissible. Mixers run on hydrocarbons are not permitted, due to fumes.

.2 Clean all mixing boards and mechanical mixing machine between batches.

.3 Mortar must be weaker than the units it is binding.

.4 Contractor to appoint one individual to mix mortar, for duration of project. In the event that this individual must be changed, mortar mixing must cease until the new individual is trained, and mortar mix is tested.

3.6 MORTAR PLACEMENT

.1 Install mortar to manufacturer's instructions.

.2 Install mortar to requirements of CAN/CSA A179.

.3 Remove excess mortar from grout spaces.

.4 Use a ‘mortar stop’ board during installation to prevent accumulation of excess mortar from restricting and/or falling into drainage cavity.

3.7 CLEANING

.1 Upon completion of installation, remove surplus materials, rubbish, tools and equipment barriers.

.2 Remove droppings and splashings using clean sponge and water.

.3 Clean masonry with low pressure clean water and soft natural bristle brush.

END OF SECTION

PART 1 General

1.1 REFERENCES

.1 ASTM International Inc.
- .1 ASTM A 82/A 82M-05a, Standard Specification for Steel Wire, Plain, for Concrete Reinforcement.
- .2 ASTM A 307-04, Standard Specification for Carbon Steel Bolts and Studs, 60 000 PSI Tensile Strength.
- .3 ASTM A 580/A 580M-06, Standard Specification for Stainless Steel Wire.
- .4 ASTM A 641/A 641M-03, Standard Specification for Zinc-Coated (Galvanized) Carbon Steel Wire.

.2 Canadian Standards Association (CSA International)
- .1 CAN/CSA-A23.1/A23.2-04, Concrete Materials and Methods of Concrete Construction/Methods of Test and Standard Practices for Concrete.
- .2 CAN/CSA A179-04, Mortar and Grout for Unit Masonry.
- .3 CAN/CSA A370-04, Connectors for Masonry.
- .4 CAN/CSA A371-04, Masonry Construction for Buildings.
- .5 CSA-S304.1-04, Design of Masonry Structures.
- .6 CSA W186-M1990, Welding of Reinforcing Bars in Reinforced Concrete Construction.

1.2 ACTION AND INFORMATIONAL SUBMITTALS

.1 Provide submittals in accordance with Section 01 33 00 - Submittal Procedures.

.2 Product Data:
- .1 Provide manufacturer's printed product literature, specifications and datasheets illustrating products to be incorporated into project for specified products.
- .2 Provide two copies of Workplace Hazardous Materials Information System (WHMIS).

.3 Shop Drawings:
- .1 Provide shop drawings in accordance with Section 01 33 00 - Submittal Procedures.
  - .1 Provide drawings stamped and signed by professional engineer registered or licensed in Province of Ontario, Canada.
- .2 Provide shop drawings detailing bar bending details, anchorage details lists and placing drawings.
- .3 On placing drawings, indicate sizes, spacing, location and quantities of reinforcement and connectors.

.4 Samples:
- .1 Provide samples of each masonry anchor type in accordance with Section 01 33 00 - Submittal Procedures.

.5 Manufacturer's Instructions:
- .1 Provide manufacturer's installation instructions.

1.3 QUALITY ASSURANCE

.1 Test Reports: certified test reports showing compliance with specified performance characteristics and physical properties.

.2 Certificates: product certificates signed by manufacturer certifying materials comply with specified performance characteristics and criteria and physical requirements.

.3 Pre-Installation Meetings: conduct pre-installation meeting to verify project requirements, manufacturer's installation instructions and manufacturer's warranty requirements. Comply with Section 04 05 00 - Common Work Results for Masonry.

.4 Mock-ups:
- .1 Construct mock-ups in accordance with Section 01 45 00 - Quality Control and requirements of Section 04 05 00 - Common Work Results for Masonry supplemented as follows:
  - .1 Construct mock-ups panel of anchorage installation reinforcement installation.
  - .2 Sample panel: 3000 mm x 3000 mm using proposed procedures, anchorage material, connectors, reinforcement material, and workmanship.

1.4 FIELD MEASUREMENTS

.1 Make field measurements necessary to ensure proper fit of members.

1.5 DELIVERY, STORAGE AND HANDLING

.1 Deliver, store and handle masonry anchorage and reinforcing materials in accordance with Section 01 61 00 - Common Product Requirements, supplemented as follows:
- .1 Deliver reinforcement and connectors identified in shop and placement drawings.

PART 2 Product

2.1 MATERIALS

.1 Bar reinforcement: Steel to CAN/CSA G30.18 (latest edtion), Fy=400 MPa

.2 Connectors: to CAN/CSA A370 and CSA-S304.1.

.3 Corrosion protection: to CSA-S304.1, galvanized to CSA-S304.1 and CAN/CSA A370.

.4 Fasteners: installed post-construction:
- .1 Screw Shields and Plugs: placed directly into solid masonry units.
- .2 Bolts and Screws: size and type to suit application, locate where indicated.
- .3 Nails: case-hardened cut or spiral nails, size and type to suit fastening application.
- .4 Powder-Driven Fasteners: pin styles and lengths to suit fastening application in accordance with manufacturers use, load and hold recommendations.
- .5 Adhesives: epoxies, mastics and contact cements for fastening applications, use in accordance with manufacturers' recommendations.

.5 Ties: hot dip galvanized to CAN/CSA A370 Table 5.2 steel finish.
- .1 Corrugated to CAN/CSA A370.
- .2 Unit ties, to CAN/CSA A370: Z style, fabricated form wire stainless steel, size to suit application.
- .3 Adjustable Unit Ties: to CAN/CSA A370: proprietary type ties, type, style and size to suit application in accordance with manufacturer's recommendations.
- .4 Joint Reinforcement Ties: to CAN/CSA A370:
  - .1 Single Wythe Joint Reinforcement: truss type:
    - .1 Steel wire, hot dip galvanized: to ASTM A 641, Class 3 after fabrication.
    - .2 Cold drawn steel wire conforming to ASTM A 82.
    - .3 Stainless steel conforming to ASTM A 580, Type 304, 4.8 mm side rods with 4.8 mm cross ties.

.6 Anchors: to CAN/CSA A370:
- .1 Conventional Anchors: type steel bolts with bent bar anchors, shape J, sized to suit application.
- .2 Wedge Anchors: expansion anchors type wedge and bolt, sized to suit application.
- .3 Sleeve Anchors: type sleeve and bolt, sized to suit application.
- .4 Self-Contained Anchors: type double-glass/plastic vial system, with epoxy resin and hardener.
- .5 Spiral Anchors: 8 mm stainless steel spiral anchors to Grade 304.
- .6 Anchor Bolts: conventional anchors, steel, galvanized to CAN/CSA A370 Table 5.2 finish.

.7 Conventional Bolts:
- .1 Bolts: to ASTM A 36, bar stock shop threaded, bent bar anchors, J shaped.
- .2 Plate anchors: steel to ASTM A 36, weld square of circular steel plate perpendicular to axis of steel bar threaded on opposite end.
- .3 Through bolt rods: to ASTM A 307 threaded rod or threaded ASTM A 36 bar stock.

2.2 FABRICATION

.1 Fabricate reinforcing in accordance with CAN/CSA-A23.1 and Reinforcing Steel Manual of Standard Practice by the Reinforcing Steel Institute of Canada.

.2 Fabricate connectors in accordance with CAN/CSA A370.

.3 Upon approval of Consultant, weld reinforcement in accordance with CSA W186.

.4 Ship reinforcement and connectors, clearly identified in accordance with drawings.

PART 3 Execution

3.1 MANUFACTURER’S INSTRUCTIONS

.1 Comply with manufacturer's written recommendations, including product technical bulletins, handling, storage and installation instructions, and datasheets.

3.2 PREPARATION

.1 Direct and coordinate placement of metal anchors for masonry supplied to other Sections.

3.3 INSTALLATION

.1 Supply and install masonry connectors and reinforcement in accordance with CAN/CSA A370, CAN/CSA A371, CAN/CSA-A23.1 and CSA-S304.1 unless indicated otherwise.

.2 Supply and install additional reinforcement to masonry as indicated.

3.4 BONDING AND TYING

.1 Bond walls of two or more wythes using metal connectors in accordance with CSA-S304.1, CAN/CSA A371 and as indicated.

.2 Tie masonry veneer to backing in accordance with NBC, CSA-S304.1, CAN/CSA A371 and as indicated.

.3 Install unit, adjustable, single wythe and multiple wythe joint reinforcement where indicated and in accordance with CAN/CSA A370 and CAN/CSA A371.
- .1 Bond walls of two or more wythes using metal connectors in accordance with CAN/CSA A371 and as indicated.
- .2 Install horizontal joint reinforcement 400 mm on centre.
- .3 Place masonry joint reinforcement in first horizontal joints above and below openings. Extend minimum 400 mm each side of opening.
- .4 Place joint reinforcement continuous in first joint below top of walls.
- .5 Lap joint reinforcement ends minimum 150 mm.
- .6 Connect stack bonded unit joint corners and intersections with strap anchors 400 mm on centre.

3.5 REINFORCED LINTELS, BOND BEAMS, WALLS AND PILASTERS

.1 Reinforce masonry beams, masonry lintels and bond beams as indicated in tables below:

.1 Non-Load Bearing Block Walls		
Size	**Vertical Reinforcing**	**Horizontal Reinforcing**
140mm	10M @ 600c/c	ASWG #9 @ 200 c/c
190mm	15M @ 1200c/c (0 to 3600- Height to Lateral Support)	ASWG #9 @ 400 c/c
190mm	20M @ 1200c/c (3601 to 7000- Height to Lateral Support)	ASWG #9 @ 400c/c
240mm	20M @ 1200c/c (Up to 7800- Height to Lateral Support)	ASWG #6 @ 400c/c

.2 Masonry Pilasters			
Wall Size	**Designation**	**Pilaster**	**Beam Base**
140/190mm wall	MP1 Typ. U.N.O. in Plan	2 cells c/w 1-20M in each cell, fully grouted	350x13x140/190 c/w 2-16mmØ x 208LG. Nelson Studs
140/190mm wall	MP2	3 cells c/w 1-20M in each cell, fully grouted	350x13x140/190 c/w 2-16mmØ x 208LG. Nelson Studs
240mm/290mm wall	MP3 Typ. U.N.O. in Plan	2 cells c/w 2-20M in each cell, fully grouted	350x13x190 c/w 2-16mmØ x 208LG. Nelson Studs
240mm/290mm wall	MP4	3 cells c/w 2-20M in each cell, fully grouted	350x13x190 c/w 2-16mmØ x 208LG. Nelson Studs
240mm/290mm wall	MP5	4 cells c/w 2-20M in each cell, fully grouted	350x16x350 c/w 4-16mmØ x 208LG. Nelson Studs
240mm/290mm wall	MP6	5 cells c/w 2-20M in each cell, fully grouted	350x13x190 c/w 2-16mmØ x 208LG. Nelson Studs

.3 Lintels		
Opening	**Lintel**	**Pilaster (each side)**
Up to 2000mm (190mm Wall)	190mm lintel block + 190mm knock-out web bond beam c/w 2-20M bot. + 1-20M top + 10M @200 c/c vertical hairpins, fill lintel block with concrete, provide 20M x 750lg. dowels @ 600 c/c for wall above typ.	MP1 no steel base plate required
Up to 2000mm (240mm/290mm Wall)	240mm/290mm lintel block + 240mm/290mm knock-out web bond beam c/w 2-20M bot. + 2-20M top 10M @200c/c vertical hairpins, fill lintel block with concrete, provide 20M x 750 lg. dowels @ 600c/c for wall above typ.	MP3 no steel base plate required
2001 to 3000mm (190mm Wall)	190mm lintel block + 2-190mm knock-out web bond beam c/w 2-20M bot. + 1-20M top 10M @200c/c vertical hairpins, fill lintel block with concrete, provide 20M x 750 lg. dowels @ 600c/c for wall above typ.	MP2 no steel base plate required
Non-Load Bearing Lintels Up To 1500mm	Lintel block c/w 2-15m, fill with concrete, provide 15M x 600 lg. @600c/c dowels for wall above	MP1 OR MP3 no steel base plate required
Non-Load Bearing Lintels 1501 to 2500mm	Lintel block + knock-out web bond beam c/w 2-15M bot. + 2-15M top + 10M @400c/c vertical hairpins, fill lintel block with concrete, provide 15m x 750 lg. dowels @ 600c/c for wall above typ.	MP1 OR MP3 no steel base plate required
Non-Load Bearing Lintels 2501 to 4000mm	Lintel block + knock-out web bond beam c/w 2-20M bot. + 2-20M top + 10M @200c/c vertical hairpins, fill lintel block with concrete, provide 15m x 750 lg. dowels @ 600c/c for wall above typ.	MP1 OR MP3 no steel base plate required

.2 Place and grout reinforcement in accordance with CSA-S304.1, CAN/CSA A371, and CAN/CSA A179.

.3 Support and position reinforcing bars in accordance with CAN/CSA A371.

3.6 GROUTING

.1 Grout masonry in accordance with CSA-S304.1, CAN/CSA A371 and CAN/CSA A179 and as indicated.

3.7 ANCHORS

.1 Supply and install metal anchors in accordance with CAN/CSA A370 and CAN/CSA A371 as indicated.

3.8 LATERAL SUPPORT AND ANCHORAGE

.1 Supply and install lateral support and anchorage in accordance with CSA-S304.1 and as indicated.

3.9 MOVEMENT JOINTS

.1 Reinforcement will not be continuous across movement joints unless otherwise indicated.

3.10 FIELD BENDING

.1 Do not field bend reinforcement and connectors except where indicated or authorized by Consultant.

.2 When field bending is authorized, bend without heat, applying a slow and steady pressure.

.3 Replace bars and connectors which develop cracks or splits.

3.11 FIELD TOUCH-UP

.1 Touch up damaged and cut ends of epoxy coated or galvanized reinforcement steel and connectors with compatible finish to provide continuous coating.

3.12 CLEANING

.1 Clean in accordance with Section 01 74 11 - Cleaning.
  .1 Remove surplus materials, excess materials, rubbish, tools and equipment.

END OF SECTION

PART 1 General

1.1 REFERENCES

.1 Codes and standards referenced in this section refer to the latest edition thereof.

.2 American Society for Testing and Materials, (ASTM).
- .1 ASTM D2240, Standard Test Method for Rubber Property - Durometer Hardness. (latest edition)

.3 Canadian Standards Association (CSA)
- .1 CSA-A371, Masonry Construction for Buildings. (latest edition)

1.2 ACTION AND INFORMATIONAL SUBMITTALS

.1 Product Data:
- .1 Submit manufacturer's printed product literature, specifications and data.
- .2 Submit two copies of WHMIS MSDS - Material Safety Data. Indicate VOC's for joint fillers and lap adhesives.

.2 Manufacturer's Instructions:
- .1 Submit manufacturer's installation instructions.

PART 2 Product

2.1 MATERIALS

.1 Control joint filler: purpose-made elastomer 70 durometer hardness to ASTM D2240 Latest Edition of size and shape indicated.

.2 Lap adhesive: recommended by masonry flashing manufacturer.

.3 Weep hole vents: purpose-made PVC.

.4 Cavity Wall Flashing:
- .1 Self adhering SBS rubberized asphalt compound integrally laminated to cross-laminated polyethylene film, minimum thickness 1.0 mm.
- .2 Primer: as per manufacturer’s recommendation.

.5 Cavity Drainage Mat
- .1 Fluid conducting, non-absorbent, mold and mildew resistant polymer mesh consisting of 100% recycled plastic with binder to be a non-woven textile product in random pattern and have voids no greater than 6mm in diameter, designed for substantially continuous installation behind the full-height of all masonry.
- .2 Thickness: 25mm
- .3 Acceptable Material: Cav Clear

.6 Through-wall masonry flashing:
- .1 Flexible flashing:
  - .1 Materials: pressure-sensitive membrane of SBS rubberized asphalt fully laminated to a yellow film of crossed polyethylene compatible with air barriers made the same way.
  - .2 Dimensions: strip 1.0 mm thick x 300 mm or 450 mm to ensure the quality of work specified in Part 3.
  - .3 Acceptable Material: BlueSkin TWF membrane by Bakor or approved equivalent.

.4 Rigid support under the flexible flashing: flashing in galvanized steel with throat, 0.607 mm thick.

.7 Mortar Mesh:
- .1 Type: Polymer mesh strips with geometric design to be placed in masonry cavities to break up and deflect mortar droppings;
  - .1 Acceptable Material Mortar Break by Advanced Building Products, Inc.
- .2 Composition: High density polyethylene woven mesh formed into geometric design.
- .3 Thickness: To suit cavity
- .4 Width: 254 mm.
- .5 Properties tested in accordance with ASTM D5035:
  - .1 Tensile strength:
    - .1 Roll direction: 285 PSI minimum.
    - .2 Cross roll direction: 310 PSI minimum.
  - .2 Elongation:
    - .1 Roll direction: 60 percent.
    - .2 Cross roll direction: 55 percent.

PART 3 Execution

3.1 MANUFACTURER'S INSTRUCTIONS

.1 Compliance: comply with manufacturer's written data, including product technical bulletins, product catalogue installation instructions, product carton installation instructions, and data sheets.

3.2 INSTALLATION

.1 Install continuous control joint fillers in control joints at locations indicated on drawings.

.2 Install weep hole vents in vertical joints immediately over flashings, in exterior wythes of cavity wall and masonry veneer wall construction, at maximum horizontal spacing of 600 mm on centre.

.3 Install drainage mat at the bottom of all masonry veneer cavities to a height of 400mm min.

3.3 CONSTRUCTION

.1 Build in flashings in masonry in accordance with CSA-A371 as follows:
- .1 Install flashings under exterior masonry bearing on foundation walls, slabs, shelf angles, and steel angles over openings. Install flashings under weep hole courses and as indicated.
- .2 In cavity walls and veneered walls, carry flashings from front edge of masonry, under outer wythe, then up backing not less than 300 mm, and as follows:
  - .1 For masonry backing embed flashing 25 mm in joint.
  - .2 For concrete backing, insert flashing into reglets.
  - .3 For gypsum board backing, bond to wall using manufacturer's recommended adhesive.
- .3 Lap joints 150 mm and seal with adhesive.

3.4 CLEANING

.1 Upon completion of installation, remove surplus materials, rubbish, tools and equipment barriers.

END OF SECTION

PART 1 General

1.1 REFERENCES

.1 Canadian Standards Association (CSA International)
- .1 CAN/CSA-A165 Series, CSA Standards on Concrete Masonry Units covers: A165.1, A165.2, A165.3.
- .2 CAN/CSA A371-04, Masonry Construction for Buildings.
- .3 CSA S304.1-04, Design of Masonry Structures.

.2 Underwriters' Laboratories of Canada (ULC)
- .1 CAN/ULC-S101-07, Standard Methods of Fire Endurance Tests of Building Construction and Materials.

1.2 ACTION AND INFORMATIONAL SUBMITTALS

.1 Provide submittals in accordance with Section 01 33 00 - Submittal Procedures.

.2 Product Data:
- .1 Product Data: provide product data, including manufacturer's printed data sheets and catalogue pages illustrating products to be incorporated into project for specified products.

.3 Samples:
- .1 Provide unit samples in accordance with Section 04 05 00 - Common Work Results for Masonry.

.4 Mock-up:
- .1 Construct mock-up in accordance with Section 01 45 00 Quality Control.
- .2 Construct typical exterior wall 1200 mm wide x full wall height, incorporating connection to curtain wall, insulation, and junction with roof system; illustrating materials interface and seals.
- .3 Locate where directed.
- .4 Mock-up may remain as part of finished work.
- .5 Allow 24 hours for inspection of mock-up by consultant before proceeding with air barrier work.

1.3 DELIVERY, STORAGE, AND HANDLING

.1 Deliver, store and handle concrete unit masonry in accordance with Section 04 05 00 - Common Work Results for Masonry.

.2 Packaging Waste Management:
- .1 Separate and recycle waste materials in accordance with Section 01 74 19 - Waste Management and Disposal.

PART 2 Product

2.1 MATERIALS

.1 Standard concrete block units Type H/15/A/M: to CAN/CSA-A165 Series (CAN/CSA-A165.1 .
- .1 Special shapes: provide square bull-nosed double bull-nosed units for exposed corners. Provide purpose-made shapes for lintels, beams and bond beams. Provide additional special shapes as indicated.

.2 Profile/Texture for Architectural Concrete Unit Masonry, to CSA A165.1:
- .1 Compressive strength min at 14 days: 25 MPa
- .2 Dry density min after 14 days: 2200 kg/m^3
- .3 Water absorption max at 14 days: 130 kg/m^3
- .4 Colour: Charcoal.
- .5 Finish: Buffed.
- .6 Size: 190mm x 390 mm x 90 mm.
- .7 Acceptable Material: Permacon Noble Architectural Block Series.

.3 Profile/Texture for Cap Sill, to CSA A165.1:
- .1 Colour: Limestone.
- .2 Finish: Buffed.
- .3 Size: 140mm x 590 mm x 90 mm.
- .4 Acceptable Material: Permacon Cardiff Accessories.

2.2 REINFORCEMENT

.1 Reinforcement in accordance with Section 04 05 19 - Masonry Anchorage and Reinforcing.

2.3 CONNECTORS

.1 Connectors in accordance with Section 04 05 19 - Masonry Anchorage and Reinforcing.

2.4 FLASHING

.1 Flashing: in accordance with Section 04 05 23 - Masonry Accessories.

2.5 MORTAR MIXES

.1 Mortar and mortar mixes in accordance with Section 04 05 12 - Masonry Mortar and Grout.

.2 Follow manufacturer’s recommendations for compatibility with proprietary masonry products as Architectural Concrete Block.

2.6 GROUT MIXES

.1 Grout and grout mixes in accordance with Section 04 05 12 - Masonry Mortar and Grout.

2.7 CLEANING COMPOUNDS

.1 Compatible with substrate and acceptable to masonry manufacturer for use on products.

.2 Cleaning compounds compatible with concrete unit masonry and in accordance with manufacturer's written recommendations and instructions.

2.8 TOLERANCES

.1 Tolerances for standard concrete unit masonry tolerances in accordance with CAN/CSA A165.1, supplemented as follows:
- .1 Maximum variation between units within specific job lot not to exceed 2 mm.
- .2 No parallel edge length, width or height dimension for individual unit to differ by more than 2 mm.
- .3 Out of square tolerance not to exceed 2 mm.

.2 Tolerances for architectural concrete masonry units in accordance with CAN/CSA A165.1, supplemented as follows:

.1 Maximum variation in length or height between units within specific job lot for specified dimension not to exceed 2 mm.

.2 No parallel edge length, width or height dimension for individual unit to differ by more than 2 mm.
.3 Out of square tolerance not to exceed 2 mm.
.4 Maximum variation in width between units within specific job lot for specified dimension not to exceed 2 mm.

PART 3 Execution

3.1 EXAMINATION

.1 Verify surfaces and conditions are ready to accept work of this Section.

.2 Commencing installation means acceptance of substrates.

3.2 PREPARATION

.1 Protect adjacent finished materials from damage due to masonry work.

3.3 INSTALLATION

.1 Architectural concrete unit masonry:
.1 Bond: running.
.2 Coursing height: 200 mm for one block and one joint.
.3 Jointing: raked where exposed or where paint or finish coating is specified.

3.4 REINFORCEMENT

.1 Install reinforcing in accordance with Section 04 05 19 - Masonry Anchorage and Reinforcing .

3.5 CONNECTORS

.1 Install connectors in accordance with Section 04 05 19 - Masonry Anchorage and Reinforcing .

3.6 FLASHING

.1 Install flashings: in accordance with Section 04 05 23 - Masonry Accessories.

3.7 MORTAR PLACEMENT

.1 Place mortar in accordance with Section 04 05 12 - Masonry Mortar and Grout.

3.8 GROUT PLACEMENT

.1 Place grout in accordance with Section 04 05 12 - Masonry Mortar and Grout.

3.9 CONSTRUCTION

.1 Cull out masonry units, in accordance with CAN/CSA A165 and approved range of colour samples, with chips, cracks, broken corners, excessive colour and texture variation.

.2 Build in miscellaneous items such as bearing plates, steel angles, bolts, anchors, inserts, sleeves and conduits.

.3 Construct masonry walls using running bond as indicated.

.4 Build around frames previously set and braced. Fill behind hollow frames within masonry walls with mortar or grout and embed anchors.

.5 Fit masonry closely against electrical and plumbing outlets so collars, plates and covers overlap and conceal cuts.

.6 Install movement joints and keep free of mortar where indicated.

.7 Hollow Units: spread mortar setting bed from outside edge of face shells. Gauge amount of mortar on top and end of unit to create full joints, equivalent to shell thickness. Avoid excess mortar.

.8 Solid Units: apply mortar over entire vertical and horizontal surfaces. Avoid bridging of airspace between brick veneer and backup wall with mortar.

.9 Ensure compacted head joints. Use full or face-shell joint as indicated.

.10 Tamp units firmly into place.

.11 Do not adjust masonry units after mortar has set. Where resetting of masonry is required, remove, clean and reset units in new mortar.

.12 Tool exposed joints concave weathered/raked for interior work; strike concealed joints flush.

.13 After mortar has achieved initial set up, tool joints.

.14 Do not interrupt bond below or above openings.

.15 Weep Holes:
- .1 Provide partial head joints spaced every 600mm c/c.
- .2 Weep hole vents as per 04 05 23 - Masonry Accessories

3.10 REPAIR/RESTORATION

.1 Upon completion of masonry, fill holes and cracks, remove loose mortar and repair defective work.

3.11 CLEANING

.1 Clean in accordance with Section 01 74 11 - Cleaning, supplemented as follows.
- .1 Progress Cleaning:
  - .1 Standard Concrete Unit Masonry:
    - .1 Allow mortar droppings on masonry to partially dry then remove by means of trowel, followed by rubbing lightly with small piece of block. Clean wall surface with suitable brush or burlap.
  - .2 Architectural Concrete Unit Masonry:
    - .1 Allow mortar droppings on masonry to partially dry then remove by means of trowel, followed by rubbing lightly with small piece of block. Clean wall surface with suitable brush or burlap.
  - .3 Prefaced Concrete Unit Masonry:
    - .1 Clean masonry as work progresses using soft, clean cloths, within few minutes after laying. Upon completion, when mortar has set so that it will not be damaged by cleaning, clean with soft sponge or clean cloths, brush, and clean water. Polish with soft, clean cloths.

3.12 PROTECTION

.1 Brace and protect concrete unit masonry in accordance with Section 04 05 00 - Common Work Results for Masonry.

END OF SECTION

PART 1 General

1.1 REFERENCES

.1 American Society for Testing and Materials International, (ASTM)
- .1 ASTM A 307-14, Specification for Carbon Steel Bolts and Studs, 60,000 psi Tensile Strength
- .2 ASTM A 325M-14, Specification for High-Strength Bolts for Structural Steel Joints

.2 Canadian General Standards Board (CGSB)
- .1 CAN/CGSB 85.10-99, Protective Coatings for Metals

.3 Canadian Institute of Steel Construction (CISC)
- .1 CISC/CPMA 1-73b, Quick-Drying, One-Coat Paint for Use on Structural Steel
- .2 CISC/CPMA 2-75, Quick-Drying, Primer for use on Structural Steel
- .3 CISC Code of Standard Practice for Structural Steel

.4 Canadian Standards Association (CSA International)
- .1 CAN/CSA G40.20-13/G40.21-13, General Requirements for Rolled or Welded Structural Quality Steel/Structural Quality Steel
- .2 CAN/CSA G164-M92(R2003), Hot Dip Galvanizing of Irregularly Shaped Articles
- .3 CAN/CSA S16-14, Limit States Design of Steel Structures
- .4 CAN/CSA S136-12, Cold Formed Steel Structural Members
- .5 CSA S136.12, Commentary on CSA Standard S136
- .6 CSA W47.1-09(R2014), Certification of Companies for Fusion Welding of Steel Structures
- .7 CSA W48-14, Filler Metals and Allied Materials for Metal Arc Welding
- .8 CSA W55.3-08(R2013), Resistance Welding Qualification Code for Fabricators of Structural Members Used in Buildings
- .9 CSA W59-13, Welded Steel Construction (Metal Arc Welding)

.5 Master Painters Institute
- .1 MPI-INT 5.1-98, Structural Steel and Metal Fabrications
- .2 MPI-EXT 5.1-98, Structural Steel and Metal Fabrications
- .3 Ontario Ministry of Municipal Affairs & Housing (MMAH)
  - .1 Ontario Building Code (2012)

.6 The Society for Protective Coatings (SSPC)
- .1 SSPC SP-6/NACE No. 3-00, Commercial Blast Cleaning

1.2 DESIGN REQUIREMENTS

.1 Contractor is responsible for design and engineering of details and connections in accordance with requirements of CAN/CSA-S16 and CAN/CSA-S136 (with CSA-S136.1) to resist forces, moments, shears and allow for movements indicated.

.2 Shear connections:
- .1 Select framed beam shear connections from an industry accepted publication such as "Handbook of the Canadian Institute of Steel Construction" when connection for shear only (standard connection) is required.
- .2 When shears are not indicated: Select or design connections to support reaction from maximum uniformly distributed load that can be safely supported by beam in bending, provided no point loads act on beam.

.3 Seismic Force Resisting Systems:
  .1 Connections forming part of the seismic force resisting system(s) – including but not limited to diaphragm chords, braces, beams column and their connections – shall be designed to resist forces and moments associated with the seismic design loads as indicated on Structural Drawings. Seismic design loads shall be amplified by Rd and combined with other load cases in accordance with the Ontario Building Code and CSA S16.

.4 Submit drawings and design calculations stamped and signed by qualified professional engineer licensed in Province of Ontario.

.5 Perform welding in accordance with CSA W59-M1989 (R2001).

1.3 SHOP DRAWINGS

.1 Submit shop drawings including fabrication and erection documents and materials list in accordance with Division 1.
  .1 Verify site conditions and dimensions on site before shop drawing preparation. Show all on shop drawings.
  .2 Shop drawings must be original. Reproduction of Engineer's design drawings is not acceptable.

.2 Erection drawings: indicate details and information necessary for assembly and erection purposes including:
  .1 Description of methods.
  .2 Sequence of erection.
  .3 Type of equipment used in erection.
  .4 Temporary bracings.
  .5 Connections.

.3 Ensure Fabricator drawings showing designed assemblies, components and connections are stamped and signed by qualified professional engineer licensed in the province of Ontario, Canada.

1.4 QUALITY ASSURANCE

.1 Upon request, submit 5 copies of mill test reports 4 weeks prior to fabrication of structural steel.
  .1 Mill test reports to show chemical and physical properties and other details of steel to be incorporated in project.
  .2 Provide mill test reports certified by metallurgists qualified to practice in province of Ontario, Canada.
  .3 Provide structural steel Fabricator's affidavit stating that materials and products used in fabrication conform to applicable material and products standards specified and indicated.

PART 2 Products

2.1 MATERIALS

.1 Structural steel: to CAN/CSA-G40.20/G40.21, Grade 350W.

.2 HSS Sections: to CAN/CSA-G40.21, Type 350W (Class C) or ASTM A500.

.3 Anchor bolts: to CAN/CSA-G40.20/G40.21, Grade 300W (A307) (unless otherwise noted on drawings).

.4 High Strength Anchor Bolts: To ASTM A193, Grade B7.

.5 Bolts, nuts and washers: to ASTM A325M.

.6 Welding materials: to CSA W59 and certified by Canadian Welding Bureau.

.7 Shop paint primer: to CISC/CPMA 2.

.8 Hot dip galvanizing: galvanize steel, where indicated, to CAN/CSA-G164, minimum zinc coating of 600g/m².

2.2 ADHESIVE ANCHORING SYSTEM

.1 Adhesive:
- .1 Adhesive anchoring system shall be injectable hybrid adhesive consisting of methacrylate resin and hardener.
- .2 Injectable adhesive shall be resistant to creep under sustained load conditions.
- .3 Acceptable products: HIT HY-200 or HIT-ICE by Hilti Canada Ltd., or approved equivalent. Submit details of proposed product(s) for review prior to use. Provide sufficient technical information as required to demonstrate equivalency with performance

.2 Anchor Rods:
- .1 Threaded rods furnished with a chamfered end or chisel point, to ISO 898 Class 5.8. Nuts and washers to be compatible.
- .2 Fasteners exposed to exterior conditions to be zinc coated.
- .3 Acceptable product: Hilti standard HAS-E rods.

.3 Mesh Screen Tube:
- .1 For hollow base materials a cylindrical mesh screen tube shall be used in accordance with manufacturer's recommendations.

2.3 FABRICATION

.1 Fabricate structural steel in accordance with CAN/CSA-S16 and CAN/CSA-S136 and in accordance with reviewed shop drawings.

.2 Continuously seal members by intermittent welds and plastic filler, unless otherwise indicated. Grind smooth.

.3 Provide holes in top and bottom flanges for attachment of wood nailers, as required.

.4 Hot dip galvanize after fabrication where required.

2.4 SHOP PAINTING

.1 Clean, prepare surfaces and shop prime structural steel in accordance with CAN/CSA-S16 and CAN/CSA-S136.

.2 Clean members, remove loose mill scale, rust, oil, dirt and other foreign matter. Prepare surface according to SSPC-SP-6.

.3 Apply one coat of primer in shop to steel surfaces to achieve minimum dry film thickness of 0.065 to 0.080 mils, except:
- .1 Interior Steel: Concealed:

.2 Surface preparation: to SSPC SP 3.
.3 Primer: One coat iron oxide type: to CAN/CGSB-1.40-M89 (or equivalent).
.4 Interior and Exterior Steel: Exposed
.5 Surface preparation: to SSPC SP 6 commercial blast cleaning using mechanical shot blast techniques. Hand cleaning not permitted.
.6 Primer: One coat applied in accordance with architectural finish schedules.
.7 Loose Lintels: Hot dipped galvanized.

.4 Apply paint under cover, on dry surfaces when surface and air temperatures are above 5 degrees C.

.5 Maintain dry condition and 5 degrees C minimum temperature until paint is thoroughly dry.

.6 Strip paint from bolts, nuts, sharp edges and corners before prime coat is dry.

PART 3 Execution

3.1 GENERAL

.1 Structural steel work: in accordance with CAN/CSA-S16 and CAN/CSA-S136.

.2 Welding: in accordance with CSA W59.

.3 Companies to be certified under Division 1 or 2.1 of CSA W47.1 for fusion welding of steel structures and/or CSA W55.3 for resistance welding of structural components.

3.2 CONNECTION TO EXISTING WORK

.1 Verify dimensions and condition of existing work, report discrepancies and potential problem areas to Consultant for direction before commencing fabrication.

3.3 MARKING

.1 Mark materials in accordance with CAN/CSA G40.20/G40.21. Do not use die stamping. If steel is to be left in unpainted condition, place marking at locations not visible from exterior after erection.

.2 Match marking: shop mark bearing assemblies and splices for fit and match.

3.4 ERECTION

.1 Check anchor bolt layout before erection. Arrange for discrepancies.

.2 Erect structural steel, as indicated and in accordance with CAN/CSA-S16, CAN/CSA-S136 and the Ontario Building Code in accordance with reviewed erection drawings.

.3 Field cutting or altering structural members: to approval of Consultant in writing.

.4 Clean with mechanical brush and touch up shop primer to bolts, rivets, welds and burned or scratched surfaces at completion of erection.

.5 Continuously seal members by continuous welds where indicated. Grind smooth.

.6 Use erection techniques and equipment that will not mark or abrade surfaces of exposed structural steel.

3.5 FIELD QUALITY CONTROL

.1 Inspection and testing of materials and workmanship will be carried out by testing laboratory designated by Consultant.

.2 Provide safe access and working areas for testing on site, as required by testing agency and as authorized by Consultant.

.3 Submit test reports to Consultant within 1 week of completion of inspection.

.4 Owner will pay costs of tests as specified in Division 1.

3.6 FIELD PAINTING

.1 Paint in accordance with Architectural Specifications.

3.7 GALVANIZING TOUCH-UP

.1 Touch up galvanized surfaces damaged during transportation, handling, storage, and erection and as a result of work of other sections.

.2 Touch up in accordance with ASTM A780.

.3 Clean damaged surfaces with stiff wire brush to remove rust, loose and cracked coatings.

.4 Clean welds, bolted connections and abraded areas.

.5 Apply galvanizing repair materials to match hot dip coating weight and appearance.

END OF SECTION

PART 1 GENERAL

1.1 RELATED SECTIONS

.1 05 31 00 – Steel Deck.

.1 05 50 00 – Metal Fabrications.

.1 09 91 00 – Painting.

1.2 REFERENCES

.1 Canadian General Standards Board (CGSB)
- .1 CAN/CGSB 1.40-97, Anticorrosive Structural Steel Alkyd Primer.
- .2 CAN/CGSB 1.105-M91, Quick Drying Primer.
- .3 CAN/CGSB 85.10-99, Protective Coatings for Metals.
- .4 CAN/CGSB 85.100-99, Painting.

.2 Canadian Institute of Steel Construction (CISC)/Canadian Paint Manufacturer's Association (CPMA)
- .1 CISC/CPMA 2-75, Quick-Drying, Primer for Use on Structural Steel.
- .2 CISC/CPMA 1-73b Quick-Drying, One-Coat Paint for Use on Structural Steel.

.3 Canadian Standards Association (CSA International)
- .1 CSA G40.20-13/G40.21-13, General Requirements for Rolled or Welded Structural Quality Steel/Structural Quality Steel.
- .2 CAN/CSA S16-14, Limit States Design of Steel Structures.
- .3 CSA S136-12, Cold Formed Steel Structural Members.
- .4 CSA W47.1-03, Certification of Companies for Fusion Welding of Steel Structures.
- .5 CSA W55.3-08(R2013), Resistance Welding Qualification Code for Fabricators of Structural Members Used in Buildings.
- .6 CSA W59-13, Welded Steel Construction (Metal Arc Welding).

1.3 QUALITY ASSURANCE

.1 Upon request, submit copies of mill test reports for joists and accessories. Reports to show:
- .1 Chemical and physical properties.
- .2 Other details of steel to be incorporated into work.
- .3 Certification by qualified metallurgists confirming that tests conform to requirements of CSA G40.20/G40.21

.2 Upon request, supply affidavit prepared by fabricator of structural steel joists stating that materials and products used in fabrication conform to this specification.

1.4 DESIGN OF STEEL JOISTS AND BRIDGING

.1 Design steel joists and bridging to carry loads indicated on drawings in accordance with CAN/CSA-S16 and CSA-S136.

.2 Design joists and anchorages for uplift forces as indicated and as per loading requirements of the Ontario Building Code.

.3 Ensure joists are manufactured to consider load effects due to fabrication, erection and handling.

.4 Limit roof joist deflection due to specified live load to ℓ/360 of span and deflection due to specified total load to ℓ/240 of span.

.5 Limit floor joist deflection due to specified live load to ℓ/480 of span and deflection due to specified total load to ℓ/360 of span.

.6 Minimum moment of inertia for floor joists as indicated on floor plans.

.7 Design of steel joists and bridging must also satisfy minimum design and dimensional requirements of specified fire resistance rating designs, where applicable (refer to architectural drawings).

.8 Submit copies of calculations and joist design drawings for typical joists for Consultant review at least 4 weeks prior to fabrication and/or delivery.

1.5 SHOP DRAWINGS

.1 Submit shop details and erection drawings in accordance with Division 1.

.2 Submit drawings stamped and signed by qualified Professional Engineer licensed in province of Ontario, Canada.

.3 Indicate on erection drawings, relevant details such as joist mark, depth, spacing, bridging lines, bearing, anchorage and details.

.4 Provide particulars, on shop drawings, relative to joist geometry, framed openings, splicing details, bearing and anchorage. Include member size, properties, specified and factored member loads, and stresses under various loadings, deflection and camber.

PART 2 PRODUCTS

2.1 MATERIALS

.1 Open web steel joists:
  .1 Acceptable material: Structural steel: to CSA-G40.20/G40.21 and CSA-S136.

.2 Structural steel: to CSA-G40.20/G40.21 and CSA-S136.

.3 Welding materials: to CSA-W59 with CSA-W59S1.

.4 Shop paint primer: to CISC/CPMA-2.

2.2 FABRICATION

.1 Fabricate steel joists and accessories as indicated in accordance with CAN/CSA-S16.1 and in accordance with reviewed shop drawings.

.2 Weld in accordance with CSA-W59.

.3 Provide top and bottom chord extensions where indicated.

.4 Provide diagonal and horizontal bridgings and anchorages as indicated.

2.3 SHOP PAINTING

.1 No painting is required where steel joists are to receive sprayed-on fireproofing. Otherwise, clean, prepare and shop prime surfaces of steel joists to CAN/CSA-S16 and as follows.

.2 Clean members of loose mill scale, rust, oil, dirt and other foreign matter. Prepare surfaces in accordance with SSPC SP1 brush blast.

.3 Apply one coat of CISC/CPMA 2 primer to steel surfaces to achieve maximum dry film thickness of .065 mm to .080 mm.

.4 Apply paint under cover, on dry surfaces when surface and air temperatures are above 5 degrees C.

.5 Maintain dry condition and 5 degrees C minimum temperature until paint is thoroughly dry.

.6 Strip paint bolts, nuts, sharp edges and corners before prime coat is dry.

PART 3 EXECUTION

3.1 GENERAL

.1 Structural steel work: in accordance with CAN/CSA-S16 and CSA-S136.

.2 Welding: in accordance with CSA-W59.

.3 Companies to be certified under Division 1 or 2.1 of CSA-W47.1 for fusion welding and/or CSA-W55.3 for resistance welding.

.4 Provide certification that welded joints are qualified by Canadian Welding Bureau.

3.2 CONNECTION TO EXISTING WORK

.1 Verify dimensions and condition of existing work; report discrepancies and potential problem areas to Consultant before commencing fabrication.

3.3 FIELD QUALITY CONTROL

.1 Inspection and testing of materials and workmanship will be carried out by testing laboratory designated by Consultant.

.2 Testing laboratory will inspect representative joists for integrity, accuracy of fabrication and soundness of welds.

.3 Submit test report to Consultant within 7 days after completion of inspection.

3.4 ERECTION

.1 Erect steel joists and bridging as indicated in accordance with CAN/CSA-S16 and in accordance with reviewed erection drawings.

.2 Complete installation of all bridging and anchorages before placing construction loads on joists.

.3 Field cutting or altering joists or bridging that are not shown on shop drawings: to approval of

Consultant in writing.

.4 Clean and touch up shop primer to bolts, welds, burned or scratched surfaces at completion of erection.

3.5 FIELD PAINTING

.1 Paint: in accordance with Division 9.

.2 Touch up all damaged surfaces and surfaces without shop coat with CISC/CPMA-2 in accordance with manufacturers' recommendations to CAN/CGSB-85.10.

END OF SECTION

PART 1 GENERAL

1.1 RELATED SECTIONS

.1 05 12 00 – Structural Steel

.2 05 50 00 – Metal Fabrications

1.2 REFERENCES

.1 American Society for Testing and Materials (ASTM):
- .1 A653/A653M-13 Standard Specification for Steel Sheet, Zinc-Coated (Galvanized) or Zinc-Iron Alloy-Coated (Galvannealed) by the Hot-Dip Process

.2 Canadian Standards Association (CSA):
- .1 CSA-S16-14, Limit States Design of Steel Structures
- .2 CSA-S136-12, North American Specification for the Design of Cold-Formed Steel Structural Members
- .3 CSA W47-09(R2014), Certification of Companies for Fusion Welding of Steel
- .4 CSA W55.08(R2013), Resistance Welding Qualification Code for Fabricators of Structural Members Used in Buildings.
- .5 CSA W59-13: Welded Steel Construction, (Metal Arc Welding).

.3 Canadian Sheet Steel Building Institute (CSSBI):
- .1 CSSBI 10M-06: Standard for Steel Roof Deck.

1.3 SUBMITTALS

.1 Submit technical details of proposed product substitutions (if any) for review including technical data sheets to demonstrate equivalency prior to proceeding with the work.

PART 2 PRODUCTS

2.1 MATERIALS

.1 Zinc-iron Alloy (ZF) coated steel sheet: to ASTM A653/A653M structural quality Grade A, with ZF75 coating, for interior surfaces not exposed to weather, finish.

.2 Zinc (Z) coated steel sheet: to ASTM A653/A653M structural quality Grade A, with ZF75, coating, regular spangle surface, chemically treated for unpainted finish, not chemically treated for paint finish, for interior surfaces or exterior surfaces exposed to weather.

2.2 ROOF DECK

.1 Steel deck sheets with interlocking side laps.

.2 Steel according to ASTM A653M SS Grade 230, minimum yield strength of 230MPa.

.3 Profile depth: 38mm

.4 Minimum nominal thickness (gauge) as indicated on Structural Drawings.

.5 Acceptable material: Canam P-3615 or approved equivalent.

2.3 ACOUSTICAL ROOF DECK

.1 Steel deck sheets with interlocking side laps and perforated web elements.

.2 Steel according to ASTM A653M SS Grade 230, minimum yield strength of 230MPa.

.3 Profile depth: 76mm

.4 Acoustic deck to be prefinished: 5000 series paint system with proven white colour approved by Consultant from manufacturer's standard list.

.5 Minimum nominal thickness (gauge) as indicated on Structural Drawings.

.6 Sound-Absorbing Insulation: Manufacturer's standard premolded roll or strip of glass or mineral fiber.

.7 Acceptable material: Canam P-2436 ACOUSTIC or approved equivalent.

2.4 COMPOSITE FLOOR DECK

.1 Steel deck sheets with interlocking side laps and embossments to act in composite action with concrete topping.

.2 Steel according to ASTM A653M SS Grade 230, minimum yield strength of 230MPa.

.3 Profile depth: 38mm

.4 Minimum nominal thickness (gauge) as indicated on Structural Drawings.

.5 Acceptable material: Canam P-3615 COMPOSITE or approved equivalent.

2.5 ACCESSORIES

.1 Provide all edge strips, pour stops, cell closures, cover plates or closure strips necessary to complete the work in accordance with manufacturer's recommendations.

.2 Use steel sheet with minimum base steel thickness and metallic coating to match adjacent deck material.

.3 Primer: zinc rich, ready mix to CAN/CGSB-1.181.

.4 Mechanical fasteners or welds are acceptable for accessory attachments.

PART 3 EXECUTION

3.1 GENERAL

.1 Design, detail, fabricate and erect in accordance with CAN/CSA-S136 and CSSBI 10M.

.2 All welding to be in accordance with CSA W59, except where specified otherwise.

.3 Welding companies to be certified under Division 1 or 2.1 of CSA W47.1 for fusion welding of steel decks and/or CSA W55.3 for resistance welding.

3.2 ERECTION

.1 Erect steel deck in accordance with CAN/CSA S136 and CSSBI 10M except as specified otherwise.

.2 Install sound absorbing insulation into top side of ribs of deck as specified in Division 07.

.3 Lap ends: to 150 mm minimum, or as recommended by deck manufacturer.

.4 Deck must be continuous over a minimum of three spans (i.e. four supports).

.5 Deck connections shall be as indicated on Structural Drawings.

.6 Provide continuous L76x76x6.4 supporting decking edges unless noted otherwise.

.7 Immediately after deck is permanently secured in place, touch up metallic coated top surface with compatible primer where burned by welding.

.8 Prior to concrete placement, steel deck to be free of soil, debris, standing water, loose mil scale and other foreign matter.

3.3 CLOSURES

.1 Install closures in accordance with details, as indicated, to ensure effective closures against weather, thermal and acoustic effects.

.2 For details not indicated, follow manufacturer's recommendations.

3.4 OPENINGS AND AREAS OF CONCENTRATED LOADS:

.1 No reinforcement required for openings cut in deck that are smaller than 150 mm square.

.2 Frame deck openings with any one dimension between 150 to 300 mm as recommended by manufacturer, except as otherwise indicated.

.3 Framed openings: For any deck openings with any one dimension greater than 300 mm and for areas of concentrated load, reinforce with C100x8 channels on 4 sides unless otherwise indicated in the structural drawings.

.4 Connections
Install connections in accordance with CSSBI recommendations.

END OF SECTION

PART 1 GENERAL

1.1 REFERENCE STANDARDS

.1 ASTM International (ASTM)
- .1 ASTM A 123/A 123M-15, Standard Specification for Zinc (Hot-Dip Galvanized) Coatings on Iron and Steel Products.

.2 CSA Group (CSA)
- .1 CSA W47.1-09R(2014), Certification of Companies for Fusion Welding of Steel Structures.
- .2 CAN/CSA S136-12 Package, North American Specification for the Design of Cold Formed Steel Structural Members.
- .3 CSA W59-13, Welded Steel Construction (Metal Arc Welding) Metric.

.3 Canadian Sheet Steel Building Institute (CSSBI)
- .1 **CSSBI 51-06**, Lightweight Steel Framing Design Manual.
- .2 CSSBI Fact Sheet #3 February 2006, Care and Maintenance of Prefinished Sheet Steel Building Products.
- .3 CSSBI Technical Bulletin Vol. 7, No. 2 September 2011, Changing Standard Thicknesses for Canadian Lightweight Steel Framing Applications.
- .4 CSSBI S5-11, Guide Specification for Wind Bearing Steel Studs.

.4 Master Painters Institute (MPI)
- .1 Architectural Painting Specification Manual - current edition.

1.2 DESIGN REQUIREMENTS

.1 Design structural metal studs to resist effects of earthquake motions under seismic design conditions for Post Disaster buildings as specified in the Contract Documents and specifically on drawing S000 item D01-3 SEISMIC SYSTEM/LOADING DATA. Provide components as necessary to implement the design.

1.3 ACTION AND INFORMATIONAL SUBMITTALS

.1 Submit in accordance with Section 01 33 00 - Submittal Procedures.

.2 Product Data:
- .1 Submit manufacturer's instructions, printed product literature and data sheets for structural metal studs and include product characteristics, performance criteria, physical size, finish and limitations.
- .2 Submit 2 copies of WHMIS SDS in accordance with Section 01 35 29.06 - Health and Safety Requirements.

.3 Shop Drawings:
- .1 Submit drawings stamped and signed by professional engineer registered or licensed in Province of Ontario, Canada.
- .2 Indicate design loads, member sizes, materials, design thickness exclusive of coatings, coating specifications, connection and bracing details, screw sizes and spacing, and anchors.
- .3 Indicate locations, dimensions, openings and requirements of related work.

.4 Samples: Submit duplicate 300 x 300 mm samples of framing components for review for each type including fasteners.

1.4 QUALITY ASSURANCE

.1 Test Reports: submit certified test reports showing compliance with specified performance characteristics and physical properties.

.2 Certificates: submit product certificates signed by manufacturer certifying materials comply with specified performance characteristics and criteria and physical requirements.

.3 Manufacturer Reports: Submit manufacturer's written report, within 3 days of review, verifying compliance of Work, as described in PART 3 - FIELD QUALITY CONTROL.

1.5 DELIVERY, STORAGE AND HANDLING

.1 Deliver, store and handle materials in accordance with Section 01 61 00 - Common Product Requirements and with manufacturer's written instructions.

.2 Delivery and Acceptance Requirements: deliver materials to site in original factory packaging, labelled with manufacturer's name and address.

.3 Storage and Handling Requirements:
- .1 Store materials off ground, indoors, in dry location and in accordance with manufacturer's recommendations in clean, dry, well-ventilated area.
- .2 Store and protect structural metal studs from nicks, scratches, and blemishes.
- .3 Protect steel studs during transportation, site storage and installation in accordance with CSSBI Sheet Steel Facts #3.
- .4 Handle and protect galvanized materials from damage to zinc coating.
- .5 Replace defective or damaged materials with new.

.4 Develop Construction Waste Management Plan related to Work of this Section.

.5 Packaging Waste Management: remove for reuse and return by manufacturer of pallets, crates, padding, and packaging materials as specified in Construction Waste Management Plan in accordance with Section 01 74 19 - Waste Management and Disposal.

PART 2 PRODUCTS

2.1 MATERIALS

.1 Steel: to CAN/CSA S136, fabricated from ASTM A 653/A 653M, Grade 340 steel.

.2 Zinc coated steel sheet: quality to ASTM A 653/A 653M, with Z275 designation coating.

.3 Screws: pan head, self-drilling, self-tapping sheet metal screws, corrosion protected with minimum zinc coating thickness of 0.008 mm.

.4 Anchors: concrete expansion anchors or other suitable drilled type fasteners.

.5 Bolts, nuts, washers: hot dipped galvanized to ASTM A 123/A 123M, 600 g/m² zinc coating.

.6 Touch up primer: zinc rich, to MPI #18.

2.2 STEEL STUD DESIGNATIONS

.1 Colour code: to CSSBI Technical Bulletin Vol.7, No. 2.

2.3 METAL FRAMING

.1 Steel studs: to CAN/CSA S136, fabricated from metallic coated steel, depth as indicated.
  .1 Minimum steel thickness of 0.84 mm.

.2 Stud tracks: fabricated from same material and finish as steel studs, depth to suit.
  .1 Bottom track: single piece.
  .2 Top track: single piece.

.3 Bridging: fabricated from same material and finish as studs, 38 x 12 x 1.09 mm minimum thickness.

.4 Angle clips: fabricated from same material and finish as studs, 38 x 38 mm x depth of steel stud, 1.37 mm minimum thickness.

.5 Tension straps and accessories: as recommended by manufacturer.

2.4 SOURCE QUALITY CONTROL

.1 Mill reports for material properties reviewed by Consultant.

PART 3 EXECUTION

3.1 EXAMINATION

.1 Verification of Conditions: verify conditions of substrate previously installed under other Sections or Contracts acceptable for structural metal stud in accordance with manufacturer's written instructions.
  .1 Visually inspect substrate in presence of Consultant.
  .2 Inform Consultant of unacceptable conditions immediately upon discovery.
  .3 Proceed with installation only after unacceptable conditions remedied and after receipt of written approval to proceed from Consultant.

3.2 GENERAL

.1 Weld in accordance with CSA W59.

.2 Certification of companies: to CSA W47.1 for fusion welding

.3 Do structural metal stud framing work to CSSBI S5.

3.3 ERECTION

.1 Erect components to requirements of reviewed shop drawings.

.2 Anchor tracks securely to structure at 800 mm on centre maximum, unless lesser spacing prescribed on shop drawings.

.3 Erect studs plumb, aligned and securely attached with 2 screws minimum, welded in accordance with manufacturer's recommendations.

.4 Seat studs into bottom tracks and single piece top track.

.5 Install 50 mm minimum telescoping track at top of walls where required to accommodate vertical deflection.
- .1 Nest top track into deflection channel minimum of 30 mm and maximum of 40 mm.
- .2 Do not fasten tracks together.
- .3 Stagger joints.

.6 Install studs at maximum 50 mm from abutting walls, openings, and each side of corners and terminations with dissimilar materials.

.7 Brace steel studs with horizontal internal bridging at 1200 mm maximum.
- .1 Fasten bridging to steel clips fastened to steel studs with screws or by welding.

.8 Frame openings in stud walls to adequately carry loads by use of additional framing members and bracing as detailed on shop drawings.

.9 Touch up welds with coat of zinc rich primer.

.10 Erection Tolerances
- .1 Plumb: maximum 1/500th of member length.
- .2 Camber: maximum 1/1000th of member length.
- .3 Spacing: maximum +/- 3 mm from design spacing.
- .4 Gap between end of stud and track web: maximum 4 mm.

.11 Cutouts
- .1 Maximum size of cutouts for services as follows:

Member Depth	Across Member Depth	Along Member Length	Centre to Centre Spacing (mm)
92	40 max.	105 max.	600 min.
102	40 max.	105 max.	600 min.
152	65 max.	115 max.	600 min.

- .2 Limit distance from centerline of last unreinforced cutout to end of member maximum 300 mm.

3.4 FIELD QUALITY CONTROL

.1 Manufacturer's Field Services:
- .1 Obtain written report from manufacturer's verifying compliance of Work, in handling, installing, applying, protecting and cleaning of product and submit Manufacturer's Field Reports as described in PART 1 - QUALITY ASSURANCE.
- .2 Provide manufacturer's field services consisting of product use recommendations and periodic site visits for inspection of product installation in accordance with manufacturer's instructions.
- .3 Schedule site visits to review Work as follows.
  - .1 After delivery and storage of products, and when preparatory Work complete but before installation begins.
  - .2 Twice during progress of Work at 25% and 60% complete.
  - .3 Upon completion of Work, after cleaning carried out.

3.5 CLEANING

.1 Progress Cleaning: clean in accordance with Section 01 74 11 - Cleaning.
- .1 Leave Work area clean at end of each day.

.2 Final Cleaning: upon completion remove surplus materials, rubbish, tools and equipment in accordance with Section 01 74 11 - Cleaning.

.3 Waste Management: separate waste materials for reuse and recycling in accordance with Section 01 74 19 - Waste Management and Disposal.

.1 Remove recycling containers and bins from site and dispose of materials at appropriate facility.

3.6 PROTECTION

.1 Protect installed products and components from damage during construction.

.2 Repair damage to adjacent materials caused by structural metal stud installation.

END OF SECTION

PART 1 General

1.1 RELATED DOCUMENTS

.1 Drawings and general provisions of the Contract, including General and Supplementary Conditions and Division 1 Specification Sections, apply to this Section.FEES, PERMITS and CERTIFICATES

1.2 SUMMARY OF WORK

.1 Work Included:
- .1 The work of this Section includes the provision of all labour, materials, equipment and services required to fabricate and install metal fabrications, as indicated on the drawings, as specified herein and as required for a complete project.
- .2 Examine the architectural, structural, mechanical and electrical drawings to establish the full extent of the work of this Section.

.2 Related Work:
- .1 Section 09 91 23 - Painting.

1.3 REFERENCES

.1 American Society for Testing and Materials (ASTM):
- .1 ASTM A123/A123M-15, Standard Specification for Zinc (Hot-Dip Galvanized) Coatings on Iron and Steel Products.
- .2 ASTM A167-99(2009), Standard Specification for Stainless and Heat-Resisting Chromium Nickel Steel Plate, Sheet, and Strip.
- .3 ASTM A269/A269M-14e1, Standard Specification for Seamless and Welded Austenitic Stainless Steel Tubing for General Service.
- .4 ASTM A276/A276M-15, Standard Specification for Stainless Steel Bars and Shapes.
- .5 ASTM A307-14, Standard Specification for Carbon Steel Bolts and Studs, 60.000 PSI Tensile Strength.
- .6 ASTM A325-14, Standard Specification for Structural Bolts, Steel, Heat Treated, 120/125 ksi Minimum Tensile Strength.
- .7 ASTM A653/A653M-15, Standard Specification for Steel Sheet, Zinc-Coated (Galvanized) or Zinc-Iron Alloy Coated (Galvannealed) by the Hot-Dip Process.
- .8 ASTM A780/A780M-09(2015), Standard Practice for Repair of Damaged and Uncoated Areas of Hot-Dip Galvanized Coatings.
- .9 ASTM C1107/1107M-14, Standard Specification for Packaged Dry, Hydraulic-Cement Grout (Nonshrink).
- .10 ASTM E488/E488M-15, Standard Test Methods for Strength of Anchors in Concrete and Masonry Elements.

.2 Canadian Standards Association (CSA):
- .1 CSA-G40.20-04/G40.21-13, General Requirements for Rolled or Welded Structural Quality Steel/Structural Quality Steel.
- .2 CSA-S16-14, Design of Steel Structures.
- .3 CSA-W47.1-09(R2014), Certification of Companies for Fusion Welding of Steel.
- .4 CSA-W59-13, Welded Steel Construction (Metal Arc Welding).

.3 Health Canada / Workplace Hazardous Materials Information System (WHMIS):
- .1 Material Safety Data Sheets (MSDS).

.4 Master Painters Institute (MPI):
- .1 MPI Architectural Specification Manual, 2014 (referred to herein as "MPI Manual")
- .2 MPI Approved Product List, (referred to herein as "APL")

.5 Steel Structures Painting Council (SSPC):
- .1 SSPC-S.P.6-85, Surface Preparation Standard, Commercial Blast Cleaning.

1.4 DESIGN REQUIREMENTS

.1 Design metal fabrications to resist effects of earthquake motions under seismic design conditions for Post Disaster buildings as specified in the Contract Documents and specifically on drawing S000 item D01-3 SEISMIC SYSTEM/LOADING DATA. Provide components as necessary to implement the design.

1.5 SUBMITTALS

.1 General: Submit each item in this Article according to the Conditions of the Contract and the applicable Division 01 Specification Sections.

.2 Product Data:
- .1 Submit complete manufacturer's product data for products used in miscellaneous metal fabrications, including paint products and grout. Include product characteristics, performance criteria, physical size, finish and limitations.
- .2 Include manufacturer's material safety data sheets for the safe handling of the specified materials and products, in accordance with Workplace Hazardous Materials Information Service (WHMIS) requirements.

.3 Shop Drawings:
- .1 Clearly indicate THE fabrication and erection of each metal fabrication indicated. Include plans, elevations, sections, and details of metal fabrications and their connections.
- .2 Clearly indicate materials, core thicknesses, finishes, connections, joints, method of anchorage, number of anchors, supports, reinforcement, details, and accessories.
- .3 Provide templates for anchors and bolts specified for installation under other sections.
- .4 Metal fabrications, including all related connections and fastenings, shall be designed by a structural engineer permanently licensed to practise in the Province of Ontario. Each shop drawing submitted shall bear the stamp and signature of the aforesaid structural engineer.

.4 Source Quality Control:
- .1 Certifications: submit product certificates, signed by the manufacturer, certifying materials comply with specified performance characteristics and criteria and physical requirements.
- .2 If requested by the Consultant, submit laboratory test reports in accordance with Section 01 45 00 "Quality Control".

.5 Post-installation certification: After installation, provide written certification, signed by the structural engineer responsible for the shop drawings, that all items have been installed in accordance with the shop drawings.

1.6 DESIGN REQUIREMENTS

.1 Ceiling Grid System:
- .1 Support Structure: The support members shall be located as indicated on the drawings. The spacing shall be as shown on the drawings
- .2 Ceiling Anchorage: Whenever possible, attachment to the ceiling structure above shall be by means of imbedded concrete inserts, through bolts, or by direct attachment to the structural

framing of the building. When possible, fasteners will not be in direct pull-out. The selection of fastener types, sizes and locations is the responsibility of the engineer responsible for the shop drawings.

.3 Vertical Supports: Vertical supports shall provide for both basic and micro vertical adjustments.

.4 Seismic Bracing: The framing system shall be adequately braced to meet all code requirements.

.5 Loading: The support structure shall be designed to support a uniform load of 31 kg/m2 (6.3 psf) and point loads of minimum 95kg (210 lbs).

.6 Safety Factor: The system shall be designed with a minimum safety factor of 3 based upon ultimate strength under static loading conditions.

.7 Maximum Allowable Deflection Under Live Load: 1/240 of span; size components for a single span.

1.7 QUALITY ASSURANCE

.1 Fabricator Qualifications: Firm experienced in successfully producing metal fabrications similar to those required for this Project.

.2 Installer Qualifications: Except where metal fabrications are handed over for installation by other trades, arrange for installation of metal fabrications by same firm that fabricated them.

.3 Welding: Welding operators shall be qualified under CSA-W47.1 and Welding shall be carried out in accordance with CSA-W59.

1.8 DELIVERY, STORAGE AND HANDLING

.1 Deliver, store and handle materials in accordance with Section 01 60 00 "Common Product Requirements" and with manufacturer's written instructions.

.2 Deliver materials to site in original factory packaging, labelled with manufacturer's name and address.

.3 Store materials indoors and in accordance with manufacturer's recommendations in clean, dry, well-ventilated area.

.4 Replace defective or damaged materials with new.

1.9 WASTE MANAGEMENT

.1 Separate and recycle waste materials, including packaging materials, in accordance with Section 01 74 19 "Construction Waste Management".

.2 Place materials defined as hazardous or toxic waste in designated containers.

.3 Ensure emptied containers are sealed and stored safely.

PART 2 Products

2.1 MATERIALS

.1 Steel sections and plates: to CAN/CSA-G40.21, Grade 300W.

.2 Steel pipe: to ASTM A53, standard weight, schedule 40, seamless, black for interior work, galvanized for exterior work.

.3 Proprietary metal framing system: Provide a complete metal framing system, compete with perforated steel framing members, compatible connectors, fasteners and other accessories as required. Standard of acceptance: Subject to compliance with requirements, provide products by one of the following:
- .1 Allied Tube & Conduit.
- .2 Cooper B-Line, Inc.
- .3 Flex-Strut Inc.
- .4 GS Metals Corp.
- .5 Thomas & Betts Corporation.
- .6 Unistrut Corporation; Tyco International, Ltd.
- .7 Wesanco, Inc.

.4 Stainless steel: Type 316:
- .1 Stainless steel tubing: To ASTM A269.
- .2 Bars, Shapes and Mouldings: To ASTM A276.
- .3 Sheet and Plate: To ASTM A167.

.5 Welding materials: to CSA-W59.

.6 Bolts and anchorbolts: to ASTM A307.

.7 High strength bolts: to ASTM A325M.

.8 Expansion Anchors: Anchor bolt and sleeve assembly of material indicated below with capability to sustain, without failure, a load equal to six times the load imposed when installed in unit masonry and equal to four times the load imposed when installed in concrete, as determined by testing per ASTM E488, conducted by a qualified independent testing agency.
- .1 Interior Use - Material: Carbon-steel components zinc-plated to comply with ASTM A123, minimum 400 g/m2 zinc coating weight.

.9 Shop coat primer to:
- .1 For interior steel surfaces: MPI APL #76 or #79, at the option of the fabricator.
- .2 For exterior steel surfaces: MPI APL #79.
- .3 Touch-up primer for galvanized surfaces: Zinc-rich primer, APL #19

.10 Grout: Nonshrink nonmetallic grout, premixed, factory-packaged, nonstaining, noncorrosive, nongaseous grout complying with ASTM C1107. Provide grout specifically recommended by the manufacturer for heavy-duty loading applications of the type specified in this Section. Minimum properties:
- .1 Compressive strength at 24h: 15 MPa
- .2 Pull-out strength: 7.9 MPa.

.11 Anchoring Cement: Factory-prepackaged, nonshrink, nonstaining, hydraulic controlled expansion cement formulation for mixing with water at the project site to create a pourable anchoring, patching, and grouting compound.

2.2 FABRICATION

.1 Fabricate work square, true, straight and accurate to required size, with joints closely fitted and properly secured.

.2 Fabricate items from steel unless otherwise noted.

.3 Exposed surfaces of finished steelwork to be machined and/or filled to a smooth blemish-free surface, prior to prime coating. File and grind exposed welds smooth and flush. Grind off weld-splatter.

.4 Connections:
- .1 Use welded connections for all metal work unless otherwise approved by the Consultant or unless otherwise indicated on the drawings.
- .2 Where welded connections are not used, use bolted connections unless otherwise indicated.
- .3 Use screws only where indicated or only with the approval of the Consultant. Where assembly by screws is indicated, use self-tapping, flat headed, shake-proof screws.
- .4 All anchors exposed to sight shall be bolted or screw connections so that only a bolt-head or screw-head is visible. Threaded rods and nuts are not acceptable

.5 Where possible, fit and shop assemble work, ready for erection.

.6 Ensure exposed welds are continuous for length of each joint. File or grind exposed welds smooth and flush. Seal exterior steel fabrications to provide corrosion protection in accordance with CAN/CSA-S16

2.3 SHOP PAINTING

.1 Preparation of Interior Steelwork: Clean, prepare surface and shop prime steel to CAN/CSA-S16. Thoroughly de-scale steelwork; remove roughness and irregularities; clean with a wire brush; remove oil and grease.

.2 Primer Application:
- .1 Except where specified otherwise, apply one coat of primer to non-galvanized surfaces. Use primer unadulterated, as prepared by manufacturer. Paint on dry surfaces, free from rust, scale, grease. Do not paint when temperature is lower than 7°C.
- .2 Take special care when applying primer to prepared surfaces of steelwork to be exposed in the finished installation to obtain a smooth surface capable of allowing a high-quality paint finish. Do additional filling and grinding if required.
- .3 Field touch-up: Verify that surfaces to be touched up are free from rust, scale, grease. Touch up with same material as shop primer.
- .4 Finish painting is specified in Section 09 91 23 "Painting".

.3 Do not prime the following surfaces:
- .1 Steel to be encased in concrete;
- .2 Galvanized or non-ferrous metals;
- .3 Stainless steel.
- .4 Surfaces and edges to be field welded. If painted, remove paint for field welding for a distance of at least 50 mm in all sides of the paint.

2.4 GALVANIZING

.1 Where galvanized finish is specified, hot dip galvanize steel surfaces after fabrication to ASTM A123, minimum 600 g/m^2 coating thickness.

2.5 MISCELLANEOUS METAL WORK

.1 Examine architectural, structural, mechanical and electrical drawings and specifications and furnish

all miscellaneous metalwork items required for proper execution of project, including, but not necessarily limited to, the items described herein.

.2 Supply for installation by respective trades, steel brackets, supports and angles as indicated. Drill for countersunk screws and anchor bolts. Generally, prime paint for interior installation, galvanize where indicted. Include miscellaneous steel fabrication for incorporation into casework. Coordinate with Section 06 40 00 "Architectural Woodwork and Caseworkl.

.3 Provide all accessories necessary for proper installation and correlation with adjoining work.

2.6 COORDINATION

.1 Coordinate the work of this Section with the structural steelwork supplier to ensure that all structural steelwork and metal fabrications required for a complete project are included.

.2 Be advised that claims for extras to the Contract Sum for the supply and/or installation of structural steelwork or metal fabrications arising from failure to coordinate the work of this Section with the structural steelwork supplier will not be considered.

.3 Where the work of this Section is furnished for installation by other Sections, coordinate with the appropriate Sections to ensure a proper fit and to schedule delivery dates to ensure the expeditious completion of the project.

2.7 MISCELLANEOUS FRAMING AND SUPPORTS

.1 General: Provide steel framing and supports not specified in other Sections as needed to complete the Work.

.2 Fabricate units from steel shapes, plates, and bars of welded construction unless otherwise indicated. Fabricate to sizes, shapes, and profiles indicated and as necessary to receive adjacent construction.
.1 Fabricate units from slotted channel framing where indicated.
.2 Furnish inserts for units installed after concrete is placed.

.3 Galvanize exterior miscellaneous framing and supports where indicated.

.4 Shop-prime interior miscellaneous framing and supports for paint finish by Section 09 91 23 "Painting".

2.8 ANCHORS, BRACKETS, AND FITTINGS

.1 Brackets, Flanges, Fittings and Anchors: Provide brackets, end closures, flanges, miscellaneous fittings and anchors for interconnecting components and for attaching to other work. Furnish inserts and other anchorage devices for connecting to concrete, masonry and metal stud work.

2.9 SUPPORT FRAMING FOR CEILING-HUNG TOILET PARTITIONS

.1 Provide steel framing as required to support the ceiling-hung toilet partitions from the building structure above.

.2 Coordinate with Section 10 21 13 "Metal Toilet Compartments". Verify requirements with the toilet partition manufacturers and provide and install steel framing required to properly support the ceiling-hung toilet partition installations, in accordance with the requirements of the reviewed and accepted shop drawings.

.3 Verify dimensions on site prior to fabrication.

.4 Coordinate with the structural steel supplier.

.5 Steel to be prime coated.

.6 Be advised that claims for extras to the Contract Sum for the supply and/or installation of metal fabrications associated with the overhead toilet partition installation will not be considered.

2.10 FLOOR PIT AND TRENCH FRAMES AND COVERS

.1 Refer to architectural, structural and mechanical drawings.

.2 Fabricate solid and grating covers to sizes as indicated, and as required, c/w perimeter frames and anchor bolts for casting into concrete.

.3 Steelwork to be hot dipped galvanized after fabrication for paint finish by Section 09 91 23.

EQUIPMENT RACKS

.4 Coordinate with the applicable other trades and provide racks to support electrical and other equipment as required.

.5 Fabricate racks using the specified proprietary metal framing system.

.6 Member sizes and type of connectors to be selected by the structural engineer responsible for the shop drawings to carry in-service loads

2.11 CEILING EQUIPMENT SUPPORT SYSTEM

.1 Construct a shop-fabricated or field-fabricated pipe-support assembly for supporting multiple parallel pipes, using specified proprietary metal framing system and meeting specified design requirements.
- .1 Locate the support members shall be located as indicated on the drawings at the spacing shown. The spacing shall be as shown on the drawings
- .2 Design and construct to MFMA-4.
- .3 Channels: Continuous slotted steel channel with inturned lips.
- .4 Channel Nuts: Formed or stamped steel nuts or other devices designed to fit into channel slot and, when tightened, prevent slipping along channel.

2.12 ACCESS LADDERS

.1 Fabricate access ladders as indicated and as follows:
- .1 Stringers: 65 mm x 13 mm thick steel bars, 457 mm apart, drilled to receive 19 mm diameter rungs.
- .2 Rungs: 20 mm diameter steel rod, welded to stringers at 300 mm o.c.
- .3 Brackets:
  - .1 75 mm x 200 mm angle straps, welded to stringers at maximum 1200 mm o.c., c/w fixing anchors and fasteners.
  - .2 Provide 150 mm clearance between centreline of rungs and face of wall.
  - .3 Where not otherwise indicated, provide each stringer with a fixing bracket within 300 mm of each end.
  - .4 Weld brackets to stringers in continuous runs; tack welds are not acceptable.

.2 Provide ladder safety cages where required by local codes, to comply with ANSI A14.3.

.3 Finishes:
- .1 Provide nonslip surfaces on top of each rung, either by coating the rung with aluminum-oxide granules set in epoxy-resin adhesive, or by using a type of manufactured rung that is filled with aluminum-oxide grout.
- .2 Interior ladders to be shop primed for paint finish by Section 09 91 23 "Painting Painting"
- .3 Exterior ladders to be hot-dip galvanized after fabrication.

2.13 METAL ROOF SCREEN

.1 MRS-1
- .1 Fabricate Metal Roof Screen as indicated and as follows:
  - .1 Post: 152mm x 152mm x 6.4 HSS post.
  - .2 Slats: C102x7 C-Channels.
  - .3 Brackets: 100mm x 100mm angle straps, welded to HSS posts
  - .4 Fastening:
    - .1 Fasten C-Channel Slats to Brackets using engineered bolting system.
  - .5 Finish:
    - .1 Paint Post and Slates to match exterior siding and parapet flashing. Refer to Section 09 91 23 Painting.

2.14 ROOF MOUNTED SIGN

.1 Fabricate Metal Roof Screen as indicated and as follows:
- .1 Post: 152mm x 152mm x 6.4 HSS post.
- .2 Finish:
  - .1 Paint Roof Mounted Sign to match exterior siding and parapet flashing. Refer to Section 09 91 23 painting.

2.15 2-TIER FOLD DOWN HOSE RACKING SYSTEM

.1 Fabricate 2-Tier Fold Down Hose Drying Racking System as indicated and as follows:
- .1 Material:
  - .1 Ladder Frame: Welded Aluminum Angle or C-Channel frame.
  - .2 Infill Panel: Heavy Duty Aluminum Mesh 3mm diameter wire, opening size 50mm, mechanically fastener to perimeter frame.
- .2 Size: 457mm Wide x 12m Long, Divide racking system in to 5 equal segments.
- .3 Bracket:
  - .1 Heavy Duty Folding Bracket
    - .1 Capacity: 500kg (1100 lbs) per pair.
    - .2 Two brackets per segment.
  - .2 Basis of Design: Hebgo Folding Bench Bracket by Hafele.
- .4 Fastening:
  - .1 Fasten ladder frame to Bracket using bolted connection.
  - .2 Fasten bracket to wall using welded connection.

2.16 OVERHEAD DOOR MOUNTING PLATES

.1 Fabricate Overhead Door Mounting Plates as indicated and as follows:
- .1 Material: Steel
- .2 Thickness: Min. 12.7mm
- .3 Size: Coordinate size with Overhead Door Manufacturer.
- .4 Location: Coordinate final location with Overhead Door Manufacturer.
- .5 Mounting: Plates are to be welded to Overhead Door HSS Beam.
- .6 Quantity: anticipate 6 plates per door coordinate with Overhead Door Manufacturer.

PART 3 Execution

3.1 EXAMINATION

.1 Examine areas and conditions under which work is to be performed and notify the Consultant in writing of conditions detrimental to the proper and timely completion of the work.

.2 Do not proceed with the work until unsatisfactory conditions have been corrected to the satisfaction of the installer.

.3 Take field measurements to verify or supplement dimensions.

.4 Commencement of the installation will be construed as acceptance of the site conditions and, thereafter, the Contractor shall be fully responsible for satisfactory work as specified herein.

3.2 ERECTION

.1 Except where otherwise indicated, install all metal fabrications.

.2 Erect metalwork square, plumb, straight, and true, accurately fitted, with tight joints and intersections.

.3 Provide suitable means of anchorage, acceptable to the Engineer, such as dowels, anchor clips, bar anchors, expansion bolts and shields, and toggles.

.4 Make field connections with bolts to CAN/CSA S16 or weld.

.5 Touch-up rivets, field welds, bolts and burnt or scratched surfaces after completion of erection with primer.

.6 Touch-up galvanized surfaces with zinc primer where burned by field welding.

3.3 METALWORK INTEGRATE INTO THE WORK OF OTHER SECTIONS

.1 Coordinate with the appropriate other Sections, work which is to be integrated into the work of those Sections.

.2 Where appropriate, fabricate the work of this Section and hand over to others for installation.

.3 Hand items over for casting into concrete or building into masonry to appropriate trades together with setting templates.

.4 Hand items over for incorporating into casework to casework fabricator.

3.4 INSTALLING MISCELLANEOUS FRAMING AND SUPPORTS

.1 General: Install framing and supports to comply with requirements of items being supported, including manufacturers' written instructions and requirements indicated on Shop Drawings.

.2 Hand over the concrete isolation pad edging to Section 06 10 00 "Rough Carpentry" for attachment to the plywood base.

3.5 EQUIPMENT RACKS

.1 Coordinate with the applicable other trades and install equipment racks as required and as indicated on the reviewed and accepted shop drawings.

.2 Install the rack system in accordance with the manufacturer's printed instructions.

3.6 FLOOR PIT AND TRENCH FRAMES AND COVERS

.1 Provide pit and trench frames for casting into concrete by Section 03 33 00.

.2 Install soil and grating covers as applicable.

3.7 ACCESS LADDERS

.1 Install access ladders where indicated.

.1 Fasten securely to building structure.

3.8 ADJUSTING AND CLEANING

.1 Touch-up Painting: Immediately after erection, clean field welds, bolted connections, and abraded areas. Paint uncoated and abraded areas with the same material as used for shop painting to comply with SSPC-PA1 for touching up shop-painted surfaces.
.1 Apply by brush or spray to provide a minimum 0.05-mm dry film thickness.

.2 Galvanized Surfaces: Clean field welds, bolted connections, and abraded areas and repair galvanizing to comply with ASTM A780.

.3 Perform cleaning as soon as possible after installation to remove construction and accumulated environmental dirt.

.4 Upon completion of installation, remove surplus materials, rubbish, tools and equipment barriers.

.5 Make good any damage caused by the work of this Section.

END OF SECTION

PART 1 General

1.1 REFERENCES

.1 Codes and standards referenced in this section refer to the latest edition thereof.

.2 Canadian General Standards Board (CGSB)
- .1 CAN/CGSB-51.32, Sheathing, Membrane, Breather Type.
- .2 CAN/CGSB-51.34, Vapour Barrier, Polyethylene Sheet for Use in Building Construction.
- .3 CAN/CGSB-71.26, Adhesive for Field-Gluing Plywood to Lumber Framing for Floor Systems.

.3 Canadian Standards Association (CSA)
- .1 CSA A123.2, Asphalt Coated Roofing Sheets.
- .2 CAN/CSA-A247, Insulating Fiberboard.
- .3 CSA B111, Wire Nails, Spikes and Staples.
- .4 CAN/CSA-G164, Hot Dip Galvanizing of Irregularly Shaped Articles.
- .5 CSA O112 Series, CSA Standards for Wood Adhesives.
- .6 CSA O121, Douglas Fir Plywood.
- .7 CAN/CSA-O141, Softwood Lumber.
- .8 CSA O151, Canadian Softwood Plywood.
- .9 CAN/CSA-O325.0, Construction Sheathing.

.4 National Lumber Grades Authority (NLGA)
- .1 Standard Grading Rules for Canadian Lumber.

.5 Underwriters' Laboratories of Canada (ULC):
- .1 CAN/ULC-S102-03, Standard Method of Test for Surface Burning Characteristics of Building Materials and Assemblies.
- .2 CAN/ULC-S102.2-03, Standard Method of Test for Surface Burning Characteristics of Flooring, Floor Covering and Miscellaneous Materials and Assemblies.

.6 American Society for Testing and Materials (ASTM):
- .1 ASTM D 5516 Standard Test Method for Evaluating the Flexural Properties of Fire Retardant Treated Softwood Plywood Exposed to Elevated Temperatures.
- .2 ASTM D 5664 Standard Test Method for Evaluating the Effects of Fire-Retardant Treatments and Elevated Temperatures on Strength Properties of Fire-Retardant Treated Lumber.
- .3 ASTM E 84 Standard Test Method for Surface Burning Characteristics of Building Materials.

.7 American Wood Protection Association (AWPA):
- .1 AWPA Standard P25 Standard for Waterborne Preservatives.
- .2 AWPA Standard P49 Fire Retardant Formulations.
- .3 AWPA Standard U1, Use Category System.

1.2 ACTION AND INFORMATIONAL SUBMITTALS

.1 Submit and/or process in accordance with Sections 01 33 00, Submittal Procedures and 01 45 00, Quality Control.

.2 Product Data:
- .1 Submit manufacturer's instructions, printed product literature and data sheets for structural metal studs and include product characteristics, performance criteria, physical size, finish and limitations.

.2 Submit proof of compatibility between Alkaline Copper Quaternary (ACQ) pressure treated lumber and fasteners to be utilized.

1.3 QUALITY ASSURANCE

.1 Lumber identification: by grade stamp of an agency certified by Canadian Lumber Standards Accreditation Board.

.2 Plywood, particleboard, OSB and wood based composite panels in accordance with CSA and ANSI standards.

1.4 FIRE PERFORMANCE

.1 The building is non-combustible construction. Accordingly, where feasible, use non-combustible materials. Where required by the OBC, combustible materials shall be pressure impregnated with fire retardant treatment (FRT) and finished with fire retardant coatings to the satisfaction of the authorities having jurisdiction.

.2 All finishes shall conform to the OBC requirements for a maximum flame spread rating of 150 when tested in accordance with CAN/ULC-S102 or CAN/ULC-S102.2, as applicable.

1.5 WASTE MANAGEMENT AND DISPOSAL

.1 Separate and recycle waste materials, including packaging materials, in accordance with Section 01 74 19 “Construction Waste Management”.

.2 Place materials defined as hazardous or toxic waste in designated containers.

.3 Ensure emptied containers are sealed and stored safely.

PART 2 Products

2.1 FRAMING AND LUMBER MATERIALS

.1 Lumber: unless specified otherwise, softwood, No. 1 or No. 2 grade, S4S, moisture content 19% (S-dry) or less in accordance with following standards:
- .1 CAN/CSA-O141.
- .2 NLGA Standard Grading Rules for Canadian Lumber.

.2 Framing and board lumber: in accordance with OBC 2012

.3 Furring, blocking, nailing strips, grounds, rough bucks, fascia backing and sleepers:
- .1 Board sizes: "Standard" or better grade.
- .2 Dimension sizes: "Standard" light framing or better grade.
- .3 Post and timbers sizes: "Standard" or better grade.

.4 Pressure treated material to be Alkaline Copper Quaternary (ACQ).

2.2 PANEL MATERIALS

.1 Plywood, OSB and wood based composite panels: to CAN/CSA-O325.0.

.2 Douglas fir plywood (DFP): to CSA O121, standard construction.

.3 Canadian softwood plywood (CSP): to CSA O151, standard construction.

.4 Insulating fiberboard sheathing: to CAN/CSA-A247.

.5 Gypsum sheathing: to 09 21 16 – Gypsum Board Assemblies.

.6 Cement Board: to 09 21 16 – Gypsum Board Assemblies.

.7 Composite wood products shall contain no added formaldehyde.

2.3 FIRE RETARDANT TREATMENT (FRT)

.1 Pressure impregnation fire retardant treatment (FRT): Wood and plywood where necessary to comply with OBC fire performance requirements, to the satisfaction of the authorities having jurisdiction.

.2 Vacuum pressure impregnate wood with fire retardant treatment in accordance with CSA-O80-Series, C20 for lumber and C27 for plywood.

.3 Provide flame spread rating of 25 or less. Provide ULC or WHI label for treated lumber and plywood as received from the pressure treatment plant. Include identification colour dye in fire retardant chemicals for wood which is concealed in the final work.

.4 Pressure treat materials before final milling and kiln-dry after treatment to the specified moisture content.

.5 Do not exposed pressure-treated materials to dampness between time of treatment and time finish is applied. Remove surface salt deposits before finishing.

2.4 ACCESSORIES

.1 Sealants: Section 07 92 00 – Joint Sealants.

.2 General purpose adhesive: to CSA O112 Series.

.3 Nails, spikes and staples: to CSA B111.

.4 Bolts: 12.5 mm diameter unless indicated otherwise, complete with nuts and washers.

.5 Proprietary fasteners: toggle bolts, expansion shields and lag bolts, screws and lead or inorganic fibre plugs, explosive actuated fastening devices, recommended for purpose by manufacturer.

.6 Framing clips: minimum 1 mm thick sheet steel, galvanized ZF001 coating designation.

2.5 FASTENER FINISHES

.1 Galvanizing: to CAN/CSA-G164, use galvanized fasteners for exterior work, interior highly humid areas and fire-retardant treated lumber.

2.6 WOOD PRESERVATIVE

.1 Pressure impregnated (PT) with alkaline copper quaternary (ACQ) to CAS-O80 series.

PART 3 Execution

3.1 INSTALLATION

.1 Comply with requirements of OBC latest edition, Part 9 supplemented by following paragraphs.

.2 Install members true to line, levels and elevations, square and plumb.

.3 Construct continuous members from pieces of longest practical length.

.4 Install spanning members with "crown-edge" up.

.5 Select exposed framing for appearance. Install lumber and panel materials so that grade-marks and other defacing marks are concealed or are removed by sanding where materials are left exposed.

.6 Install wall sheathing in accordance with manufacturer's printed instructions.

.7 Install furring and blocking as required to space-out and support casework, cabinets, wall and ceiling finishes, facings, fascia, soffit, siding electrical equipment mounting boards, and other work as required.

.8 Install rough bucks, nailers and linings to rough openings as required to provide backing for frames and other work.

.9 Install sleepers as indicated.

.10 Use dust collectors and high quality respirator masks when cutting or sanding wood panels.

3.2 CARPENTRY WORK FOR ROOFING

.1 Coordinate with Sections 07 52 00 and 07 62 00 and install blocking, cants, fascia backing, nailers, curbs and other wood supports as required and secure using galvanized steel fasteners.

.2 Coordinate height of roof curbs with Section 07 52 00 – Modified Bituminous Membrane Roofing.

.3 Install plywood and wood blocking at the entire perimeter of the roof and at control joints projections and penetrations to specification and as detailed.

.4 Anchor blockings to deck 300 mm o.c. to resist a force of 2.5 kN/m in any direction.

3.3 ERECTION

.1 Frame, anchor, fasten, tie and brace members to provide necessary strength and rigidity.

.2 Countersink bolts where necessary to provide clearance for other work.

.3 Use nailing disks for soft sheathing as recommended by sheathing manufacturer.

3.4 SCHEDULES

.1 Electrical equipment mounting boards:
- .1 Fire Retardant Plywood, DFP or CSP grade, (G1S) select square edge 16 mm thick, unless otherwise indicated.
- .2 Coordinate with Mechanical and Electrical drawings and specifications.

END OF SECTION

PART 1 General

1.1 REFERENCES

.1 American National Standards Institute (ANSI):
- .1 ANSI A208.1-2009, Particleboard.
- .2 ANSI A208.2-2009, Medium Density Fiberboard for Interior Use.
- .3 ANSI/HPVA HP-1-04, Standard for Hardwood and Decorative Plywood.

.2 American Society for Testing and Materials (ASTM):
- .1 ASTM A167-99(2009), Standard Specification for Stainless and Heat-Resisting Chromium Nickel Steel Plate, Sheet, and Strip.
- .2 ASTM E 1333-96(2002), Standard Test Method for Determining Formaldehyde Concentrations in Air and Emission Rates From Wood Products Using a Large Chamber.
- .3 ASTM D 5116-06, Standard Guide For Small-Scale Environmental Chamber Determinations of Organic Emissions From Indoor Materials/Products.

.3 Architectural Woodwork Manufacturers' Association of Canada (AWMAC):
- .1 Architectural Woodwork Standards, 2nd. Edition, 2014 (referred to hereinafter as "AWS").

.4 Canadian Standards Association (CSA):
- .1 CAN3-A172-M79(R1999), High Pressure Paper Base, Decorative Laminates.
- .2 CSA B35.4-1972, Wood Screws.
- .3 CSA-B111-1974(R2003), Wire Nails, Spikes and Staples.
- .4 CSA-O115-M1982(R2001), Hardwood and Decorative Plywood.
- .5 CSA-O121-08, Douglas Fir Plywood.
- .6 CSA-O121-M1978(R2003), Douglas Fir Plywood.

.5 Canadian General Standards Board (CGSB):
- .1 CAN/CGSB-19.22-M89, Mildew-Resistant Sealing Compound for Tubs and Tiles.
- .2 CAN/CGSB-71.20-M88, Adhesive, Contact, Brushable.

.6 National Hardwood Lumber Association (NHLA)
- .1 Rules for the Measurement and Inspection of Hardwood and Cypress 1998.

.7 National Electrical Manufacturers Association (NEMA)
- .1 ANSI/NEMA LD-3-05, High-Pressure Decorative Laminates (HPDL).

.8 National Lumber Grades Authority (NLGA)
- .1 Standard Grading Rules for Canadian Lumber 2003(R2007).

.9 Health Canada/Workplace Hazardous Materials Information System (WHMIS)
- .1 Material Safety Data Sheets (MSDS).

1.2 ACTION AND INFORMATIONAL SUBMITTALS

.1 Provide submittals in accordance with Section 01 33 00 - Submittal Procedures.

.2 Product Data:
- .1 Submit manufacturer's instructions, printed product literature and data sheets for laminate, adhesive, and core materials and include product characteristics, performance criteria, physical size, finish and limitations.
- .2 Submit two copies of WHMIS MSDS in accordance with Section 01 35 29.06 - Health and Safety Requirements. Indicate VOC's for adhesives in g/L.

.3 Submit manufacturer's printed product literature for all hardware and fixings and include product characteristics, performance criteria, physical size, finish and limitations. Include installation instructions for each item of hardware.

.4 Submit product data for solid plastic surfaces, including installation instructions for solid polymer fabrications.

.3 Shop Drawings:

.1 Shop drawings to include complete dimensioned drawings of each cabinetwork and millwork item, including locations of on-site joints in countertops, details of construction, profiles, jointing, fastening, location for rough-in of plumbing including sinks, faucets, strainers, and other related details.

.2 Indicate all materials, thicknesses, finishes and hardware.

.3 Indicate locations of all service outlets in millwork, typical and special installation conditions, and all connections, attachments and anchorage.

.4 Samples:

.1 The accepted samples shall be the standard of acceptance for the work of this Section.

.2 Panel Material:

.1 Submit duplicate 300 x 300mm samples of panel showing finish on both sides, two finished edges and core construction.

.3 Cabinet Hardware:

.1 Provide a complete Cabinet and Miscellaneous Hardware Schedule for the project.

.2 Pay the cost of preparation of the Hardware Schedule and include in the Contract Price.

.3 Clearly indicate hardware proposed, including make, model, material, function, finish and all other pertinent information.

.4 The Consultant's review of the Hardware Schedule does not limit or release the Contractor from the responsibility to provide all necessary hardware and related components required for a complete installation as required by the authorities having jurisdiction.

.5 Submit duplicate representative samples of each hardware item, including brackets, fastenings and trim.

.6 Submit technical literature as necessary to fully inform the Consultant regarding hardware items proposed.

.7 Include installation instructions for each item of hardware.

.4 Plastic Laminate Counters:

.1 Submit duplicate colour samples of Plastic Laminate materials for colour selection.

.2 Submit samples of joints, edging, cutouts and profiles.

.5 Maintenance Data:

.1 Provide maintenance data for plastic laminate work and plastic laminate counters for incorporation into the operation and maintenance manual specified in Section 01 78 00 "Closeout Submittals".

1.3 DELIVERY, STORAGE, AND HANDLING

.1 Protect cabinetwork against dampness during and after delivery.

.2 Do not store or install materials in areas where relative humidity is less than 25% or greater than 60% at 22°C.

.3 Store cabinetwork in ventilated areas, protected from extreme changes of temperature or humidity.

.4 Cover finished laminated plastic surfaces heavy kraft paper or put in cartons during shipment. Protect installed laminated surfaces by approved means. Do not remove protection until immediately before final inspection.

.5 Deliver, store and handle materials and products in strict compliance with manufacturer's instructions and recommendations.

.6 Store hardware in locked, clean and dry area.

.7 Package each item of hardware including fastenings, separately or in like groups of hardware, label each package as to item definition and location.

1.4 WARRANTY

.1 For the work of this Section, the 12 month warranty prescribed in the General Conditions of the Contract is extended to 5 years.

.2 Warrant that plastic laminate finish will not warp, split, delaminate or open at joints.

PART 2 Products

2.1 MATERIALS

.1 Softwood lumber: Pine species: 5 to 10% moisture content, grades in accordance with AWS Section 3, as follows:
- .1 Exposed Work: Premium Grade
- .2 Semi exposed work: Custom Grade or better.
- .3 Concealed work: Economy Grade or better.
- .4 Finger-jointed lumber is not acceptable.

.2 Hardwood lumber (exposed):
- .1 average moisture content 7% (minimum individual pieces 5%, maximum individual pieces 9%) in accordance with AWS Section 3, as follows:
  - .1 Clear or transparent finish exposed work: White Maple, Custom Grade.
  - .2 Concealed work or opaque finish: species at the option of the fabricator, Economy Grade or better.

.3 Softwood plywood: Douglas Fir Plywood (DFP) to CSA-O121, FSC certified, G1S or G2S sanded grade, as applicable.

.4 Hardwood plywood (drawers only): To CSA-Z809, specifications in accordance with AWS Section 4, HPVA Veneer Grade B.

.5 MDF (medium density fibreboard) core: to ANSI A208.2, Grade 155, 19mm thick, density 740-770 kg/m^3, or FSC certified.
- .1 Medium density fibreboard performance requirements to: ANSI A208.2.

SPEC NOTE: Co-ordinate the following paragraph with Section 01 35 21 - LEED Requirements.
- .2 MDF resin to contain no added urea-formaldehyde.

.6 Plastic Laminate for Flatwork to NEMA LD3:
- .1 Type: General Purpose
- .2 Grade: HGS
- .3 Sheet Thickness: 0.048 inch nominal.

.7 Plastic Laminate for post-forming work to NEMA LD3:
- .1 Type: General Purpose
- .2 Grade: HGP
- .3 Sheet Thickness: 0.039 inch nominal.

.8 Plastic Laminate Finish:
- .1 PLAM-1: Kitchen Cabinets:
  - .1 Manufacturer: Formica
  - .2 Colour: To be selected by consultant from full range of solid and standard patterned and finishes.
- .2 PLAM-2: Counter tops:
  - .1 Manufacturer: Formica
  - .2 Colour: To be selected by consultant from full range of solid and standard patterned and finishes.

.9 Nails and staples: CSA B111-1974, hot dipped galvanized for exterior work, and areas subject to high humidity, plain finish elsewhere.

.10 Wood screws: to CSA B35.4, electroplated, type and size to suit application.

.11 Draw bolts and splines for countertops: as recommended by fabricator.

.12 Adhesives:
- .1 Generally as recommended by the architectural woodwork fabricator.
- .2 Laminated plastic adhesive: contact adhesive to CAN/CGSB-71.20.

.13 Sealant caulking of back of countertops at wall: One-component, mildew resistant sealing compound for tubs and tiles to CAN-CGSB-19.22. Acceptable product: Tremsil 600. Colour to match adjacent materials to the approval of the Consultant.

2.2 MANUFACTURED CASEWORK

.1 Fabricate casework in accordance with AWS Section 10 to Custom quality grade, flush overlay type, except where otherwise indicated.

.2 Furring, blocking, nailing strips, grounds and rough bucks, sleepers and concealed framing: Softwood lumber, pine species.

.3 Base: 19 mm DFP faced with room base material.

.4 Concealed casework framing: Hardwood, species at the option of the fabricator.

.5 Case bodies (ends, divisions, bottoms, shelves, backs):
- .1 PLam with MDF core.
- .2 Thicknesses:
  - .1 Sides: 19mm PLam with 3mm PLam edging on 4 edges
  - .2 Back: 19mm PLam
  - .3 Bottom: 19mm PLam with 3mm PLam edging
- .3 Floor mounted cabinets to have an integral fir waterproof veneer core base.

.6 Shelving: 19mm Plastic Laminate (PLam) with MDF core with 3mm PLam edging on 4 sides.

.7 Applied cabinet doors:
- .1 19 mm PLam with MDF core with 3mm integral PLam edging on 4 sides.
- .2 Full height cabinet doors: 25 mm PLam with MDF core with 3mm integral PVC edging on 4 sides.

.8 Drawers:
- .1 Fabricate drawers to AWS Premium grade.
- .2 Drawer fronts: 19 mm PLam with MDF core with 3mm integral PLam edging on 4 sides.

.3 Semi-exposed fronts, sides and backs: 16 mm thick birch plywood. Grain direction: longitudinal.
.4 Bottoms: 6 mm thick birch plywood: Grain direction: longitudinal.
.5 Edges of drawer sides and backs: Fill all voids and sand smooth to receive transparent finish.

2.3 CASEWORK FABRICATION

.1 Fabricate casework in accordance with AWS Section 10 to Custom quality grade, double-front, flush overlay type, except where otherwise indicated.

.2 Use dado construction for fixed shelves and intermediate gables. Use rabbet joint construction at top and bottom of end gables.

.3 Shop install cabinet drawer hardware for doors, shelves and drawers. Recess shelf standards unless otherwise noted.

.4 Except where otherwise indicated, all cabinet shelves shall be adjustable.

.5 Provide cutouts for plumbing fixtures and fittings, inserts, appliances, outlet boxes, electric, telephone and computer cables, closed circuit TV cables and other fixtures. Install bushings at cable penetrations.

.6 Shop assemble work for delivery to site in size easily handled and to ensure passage through building openings.

2.4 PLASTIC LAMINATE COUNTERTOPS

.1 Construction to meet requirements of AWMAC's STANDARDS Section 11 for grade or grades specified.

.2 Core Material: MDF
.1 Wet Tops: Water Resistant MDF

.3 Front Edges:
.1 As shown on plans.

2.5 HARDWARE

.1 Manufacturers:
.1 This specification is based on the specified products which are selected to establish a standard of acceptance.
.2 Requests for substitutions will be considered. Acceptance of alternative products is subject to the approval of the Consultant.
.3 Use one manufacturer's product for all similar items.

.2 Hardware Items:
.1 Lower Door and Drawer Pulls: 20mm (.8125”) x 31mm (1.25”) clear anodized aluminium C pull across the entire length of the door or drawer mounted on top edge for base cabinet doors and drawers and on the bottom edge for upper cabinets. Pulls to be cut to suit and all edges filed smooth.
.1 Standard of acceptance: Richelieu #318212 with #10 finish.
.2 Upper cabinet door pulls: 100mm x 42mm x 17.8 clear anodized L pull with raised finger hold.
.1 Standard of acceptance: Richelieu #989880 with #10 finish.

.3 Cabinet door hinges: All metal, concealed casework hinges with cruciform mounting plates to

provide gap, depth and height adjustment. Full overlay and half overlay as required, minimum 170 deg. opening. Screw on; Cup diameter 35 mm; Self-Closing Finish: Bright nickel C14. Provide 3 hinges for doors 800 mm to 1300 mm high. 4 hinges for doors 1300 mm to 1800 mm high, and 5 hinges for doors 1800 mm to 2400 mm high.

.1 Standard of acceptance: Blum: Modul 170 Series.

.4 Drawer Hardware: Heavy duty, full extension, self-closing drawer slides, length to suit depth of drawer.

.1 Standard of Acceptance: Blum Metabox Series.

.5 Shelf Support: Clear plastic support with steel pin for 5mm dia. hole.

.1 Standard of Acceptance: Richelieu #34004011.

.6 Door and Drawer Bumpers: Two per door and drawer clear rubber.

.3 Installation Instructions:

.1 Provide manufacturer's instructions for proper installation of each hardware component

PART 3 Execution

3.1 EXAMINATION

.1 Examine areas and conditions under which work is to be performed and notify the Consultant in writing of conditions detrimental to the proper and timely completion of the work.

.2 Do not proceed with the work until unsatisfactory conditions have been corrected to the satisfaction of the installer.

.3 Take field measurements to verify or supplement dimensions.

.4 Commencement of the installation will be construed as acceptance of the site conditions and, thereafter, the Contractor shall be fully responsible for satisfactory work as specified herein.

3.2 INSTALLATION

.1 Install architectural woodwork in accordance with Quality Standards of AWMAC.

.1 In the case of conflict between the Contract Documents and AWMAC requirements, the Contract Documents govern.

.2 Install prefinished millwork at locations shown on drawings.

.1 Position accurately, level, plumb and straight.

.3 Fasten and anchor millwork securely.

.1 Provide heavy duty fixture attachments for wall mounted cabinets.

.4 Use draw bolts in countertop joints.

.5 Scribe and cut as required to fit abutting walls and to fit properly into recesses and to accommodate piping, cabling, columns, fixtures, outlets or other projecting, intersecting or penetrating objects.

.6 Make allowances around perimeter where fixed objects pass through or project into laminated plastic work to permit normal movement without restriction.

.7 Provide cutouts for inserts, grilles, appliances, outlet boxes and other penetrations. Round internal corners, chamfer edges and seal exposed core.

.8 At junction of counter, backsplash, adjacent wall finish and at plumbing fixture cutouts, apply small

bead of sealant. Refer to Section 07 92 00 "Joint Sealants".

.9 Apply moisture barrier over wood framing members in contact with masonry or cementitious construction.

.10 Fit hardware accurately and securely in accordance with manufacturer's directions. adjust operating parts for smooth, correct function.

3.3 PROTECTION

.1 Protect installed work from damage.

3.4 CLEANING

.1 Upon completion of the installation, remove from the premises all surplus material, dirt and debris caused by the work of this Section and leave the installation clean and ready for the intended use by the Owner.

END OF SECTION

PART 1 GENERAL

1.1 RELATED DOCUMENTS

.1 Drawings and general provisions of the Contract, including General and Supplementary Conditions and Division 1 Specification Sections, apply to this Section.

1.2 SUMMARY OF WORK

.1 Work Included: The work of this Section includes the provision of all labour, materials, equipment and services required to supply and install building insulation, as indicated on the drawings, as specified herein and as required for a complete project.

.2 Related Work:
- .1 Section 03 33 00 - Cast-in-Place Concrete.
- .2 Section 04 05 10 - Masonry Procedures
- .3 Section 05 41 00 – Structural Metal Studs
- .4 Section 07 52 00 - SBS Modified Bituminous Roofing.
- .5 Section 07 46 19 - Metal Siding
- .6 Section 07 61 00 - Sheet Metal Roofing
- .7 Section 09 22 16 - Non-Loadbearing Steel Stud Systems.
- .8 Section 31 23 10 - Excavating, Trenching and Backfilling.

1.3 REFERENCE STANDARDS

.1 American Society for Testing and Materials (ASTM):
- .1 ASTM C303 - 10(2016) Standard Test Method for Dimensions and Density of Preformed Block and Board–Type Thermal Insulation
- .2 ASTM C518-17 Standard Test Method for Steady-State Thermal Transmission Properties by Means of the Heat Flow Meter Apparatus
- .3 ASTM C612-04, Standard Specification for Mineral Fiber Block and Board Insulation.
- .4 ASTM C665-17 Standard Specification for Mineral-Fiber Blanket Thermal Insulation for Light Frame Construction and Manufactured Housing
- .5 ASTM E84-09, Standard Test Method for Surface Burning Characteristics of Building Materials.

.2 Underwriters' Laboratories of Canada (ULC):
- .1 CAN/ULC-S701-01, Thermal Insulation, Polystyrene Boards and Pipe Covering.
- .2 CAN/ULC-S702-97, Thermal Insulation, Mineral Fibre, for Buildings.

1.4 SUSTAINABILITY REQUIREMENTS

.1 Give preference to Products containing the highest percentage of recycled material content.

.2 Where possible, provide Products which are regionally manufactured and extracted.

.3 Comply with the requirements of Section 01 35 43 "Environmental Procedures".

.4 Cooperate with the Waste Management Coordinator in the implementation of the Waste Management Plan specified in Section 01 74 19 “Waste Management and Disposal". Handle and dispose of waste materials generated by the work of this Section in accordance with the Waste Management Plan.

1.5 DELIVERY, STORAGE & HANDLING

.1 Deliver products in original unopened packaging with legible manufacturer's identification.

.2 Store materials in strict accordance with the manufacturer's recommendations.

PART 2 PRODUCTS

2.1 BOARD THERMAL INSULATION

.1 Below grade and where not otherwise indicated:
- .1 Generally:
  - .1 Extruded expanded polystyrene board to CAN/ULC-S701, Type 4,
  - .2 Square ends, shiplap edges except where otherwise indicated.
  - .3 Thickness as indicated.
  - .4 Minimum RSI 0.87 $m^{2.o}C/W$ per 25.4 mm thickness,
  - .5 Compressive strength 210 kPa.
  - .6 Standard of Acceptance: Styrofoam SM.
- .2 Below concrete slab:
  - .1 Extruded expanded polystyrene board to CAN/ULC-S701, Type 4.
  - .2 Square ends, shiplap edges except where otherwise indicated,
  - .3 Thickness as indicated.
  - .4 Minimum RSI 0.88 $m^{2.o}C/W$ per 25.4 mm thickness
  - .5 Compressive strength 415 kPa.
  - .6 Standard of Acceptance: Styrofoam High Load-40.
- .3 Below concrete slab in Apparatus Bay:
  - .1 Extruded expanded polystyrene board to CAN/ULC-S701, Type 4.
  - .2 Square ends, shiplap edges except where otherwise indicated,
  - .3 Thickness as indicated.
  - .4 Minimum RSI 0.88 $m^{2.o}C/W$ per 25.4 mm thickness
  - .5 Compressive strength 960 kPa.
  - .6 Standard of Acceptance: Styrofoam High Load-100.

.2 Semi-rigid wall and roof insulation: Semi-rigid mineral wool fibre insulation board made from basalt rock and steel slag, conforming to ASTM C553. Density 32 kg/m^3. Minimum RSI 0.71 m2K/W per 25.4 mm thickness. Thickness as indicated. Standard of acceptance: Rockwool PLUS MB.

.3 Flat Roof insulation - refer to Section 07 52 00 "SBS Modified Bituminous Roofing".

2.2 SEMI-RIGID WALL AND ROOF THERMAL INSULATION

.1 Semi-rigid wall and roof thermal batts closest to exterior:
- .1 Mineral wool fibre batt insulation for cavity application made from basalt rock and steel slag,
  - .1 Conforming to CAN/ULC-S702, Type 1, minimum 40% recycled content.
  - .2 Density to ASTM C303: greater than 69 kg/m3.
  - .3 Thermal Resistance to ASTM C: 0.75 m2K/W per 24.5 mm thickness.
  - .4 Thickness: 50mm
  - .5 Standard of Acceptance: Rockwool CavityRock batt insulation.

.2 Semi-rigid wall and roof thermal batts closest to interior:
- .1 Mineral wool fibre batt insulation for steel Z-Girt application made from basalt rock and steel slag,
  - .1 Conforming to CAN/ULC-S702, Type 1, minimum 40% recycled content.
  - .2 Density to ASTM C303: greater than 32 kg/m3.

.3 Thermal Resistance to ASTM C: 0.70 m2K/W per 24.5 mm thickness.
.4 Thickness: 127mm.
.5 Standard of Acceptance: Rockwool MB Plus batt insulation.

2.3 ACOUSTIC BATT INSULATION

.1 Mineral Wool: FRR and Wet/Humid Locations.
- .1 Conforming to ASTM C 665 Type 1
- .2 minimum 40% recycled content.
- .3 Thickness: to suit wall assembly.
- .4 Standard of Acceptance: Rockwool AFB Insulation

2.4 ACCESSORIES

.1 Provide mechanical fasteners, insulation clips, and other accessories as recommended by the insulation manufacturer to retain the insulation in position, for each specific application.

PART 3 EXECUTION

3.1 EXAMINATION

.1 Examine areas and conditions under which work is to be performed and notify the Consultant in writing of conditions detrimental to the proper and timely completion of the work.

.2 Where applicable, verify that the air barrier membrane is in place and undamaged and has been reviewed and accepted by the Consultant.

.3 Do not proceed with the work until unsatisfactory conditions have been corrected to the satisfaction of the installer.

.4 Commencement of the installation will be construed as acceptance of the site conditions and, thereafter, the Contractor shall be fully responsible for satisfactory work as specified herein.

3.2 WORKMANSHIP

.1 Do not install insulation until the work behind it has been reviewed and accepted by the Consultant.

.2 Install insulation in strict accordance with the insulation manufacturer's written instructions, to maintain continuity of thermal, acoustical and fire protection to building elements and spaces.

.3 Apply single layer of insulation to produce thickness indicated, except where multiple layers are indicated or required to make up total thickness. Offset both vertical and horizontal joints in multiple layer applications.

.4 Use only insulation that is undamaged, dry, unsoiled, free from chipped or broken edges, and has not been exposed at any time to ice and snow.

.5 Cut and trim insulation to a neat compression-fit in spaces. Do not compress insulation excessively to fit spaces. Butt joints tightly. Use largest possible dimensions to reduce number of joints.

.6 Fit insulation closely around electrical boxes, pipes, ducts, frames and other objects in or passing through insulation in accordance with the manufacturer's instructions.

.7 Keep insulation minimum 75 mm from heat emitting devices such as recessed light fixtures, and minimum 50 mm from sidewalls of chimneys and vents.

.8 Where necessary, retain insulation in position with mechanical fasteners recommended by the insulation manufacturer for the specific application.

.9 Do not enclose insulation until it has been reviewed and accepted by the Consultant.

3.3 BELOW-GRADE INSULATION

.1 Where indicated, install below grade insulation.

.2 Install in strict accordance with the manufacturers printed instructions, after the concrete is fully cured.

.3 Install with tight shiplap joints.

.4 Where necessary to hold insulation boards in place, apply adhesive (compatible with polystyrene) to the boards. Press insulation boards into position prior to skinning of adhesive.

.5 Coordinate with the excavating, trenching and backfilling contractor to ensure suitable preparation of the subgrade to receive below-grade horizontal insulation.

.6 Butt adjacent insulation boards up tightly and ensure that corners are fully lapped.

.7 Trim insulation boards as needed to fit around openings and projections.

END OF SECTION

PART 1 GENERAL

1.1 RELATED WORK

.1 Section 07 21 00 - Building Insulation

.2 Section 07 27 00 – Air Barriers and Waterproofing

.3 Section 07 92 00 - Joint Sealants.

.4 Section 08 11 13 - Metal Doors and Frames.

.5 Section 08 36 13.02 – Insulated Metal Section Door

.6 Section 08 41 13 - Aluminum Framed Entrances and Storefronts.

.7 Section 08 51 13 - Aluminum Windows.

1.2 REFERENCES

.1 Underwriters' Laboratories of Canada (ULC):
.1 CAN/ULC-S102-03, Standard Method of Test for Surface Burning Characteristics of Building Materials and Assemblies.

1.3 SUBMITTALS

.1 General: Submit each item in this Article according to the Conditions of the Contract and the applicable Division 01 Specification Sections.

1.4 ENVIRONMENTAL REQUIREMENTS

.1 Apply insulation only when surfaces and ambient temperatures are within the manufacturer's prescribed limits.

1.5 DELIVERY, STORAGE & HANDLING

.1 Deliver products in original unopened packaging with legible manufacturer's identification.

.2 Store materials in strict accordance with the manufacturer's recommendations.

1.6 COMPATIBILITY

.1 Provide written certification, signed by the insulating sealant manufacturer, that sealant is fully compatible with the building air/vapour barrier membrane. Confirm that the membrane will not shrink and pull the membrane away from its substrate.

PART 2 PRODUCTS

2.1 MATERIAL

.1 Foam insulating sealant: Two-component polyurethane foam insulating sealant, ULC Class I (flame spread of 25 or less) to CAN\ULC-S102.

PART 3 EXECUTION

3.1 EXAMINATION

.1 Examine areas and conditions under which work is to be performed and notify the Consultant in writing of conditions detrimental to the proper and timely completion of the work.

.2 Ensure that surfaces are free of dust, oil, grease and other loose debris which may impair bond.

.3 Do not proceed with the work until unsatisfactory conditions have been corrected to the satisfaction of the installer.

.4 Commencement of the installation will be construed as acceptance of the site conditions and, thereafter, the Contractor shall be fully responsible for satisfactory work as specified herein.

3.2 PROTECTION

.1 Provide suitable protective masking to adjacent exposed surfaces.

3.3 FOAM INSULATING SEALANT APPLICATION

.1 Apply foam insulating sealant in strict accordance with the manufacturer's printed directions, using dispensing gun from material manufacturer. Fill all voids in the exterior wall insulation with sealant.

.2 Apply in all locations where required to maintain the continuity of the insulation and/or the vapour barrier, including, but not necessarily limited to the following:
- .1 Sealing voids in the exterior envelope of the building and at all locations where the continuity of the insulation is interrupted.
- .2 Sealing at junctions between materials and components which comprise the air barrier as required to maintain continuity of the air barrier.
- .3 All locations indicated on the drawings.

.3 Note that this material expands 2.5 times its original volume when applied. Do not overfill voids.

.4 If necessary, apply in several layers, each successive layer being allowed to cure before next layer is applied.

.5 Curing may be accelerated in deep cavities by slight moistening of surrounding surfaces prior to application.

.6 While curing, foam to be tooled, if required.

.7 If leakage occurs after curing, cut back flush with surrounding surfaces or recess to sufficient depth to provide for finishing caulking.

3.4 CLEANING

.1 Upon completion of the work of this Section remove from the premises all surplus material, dirt and debris caused by the work of this Section and leave the installation clean.

.2 Remove masking and temporary protection from adjacent surfaces.

.3 Clean and make good any damage to adjacent surfaces caused by the work of this Section.

END OF SECTION

PART 1 General

1.1 REFERENCES

.1 Canadian General Standards Board (CGSB))
  .1 CAN/CGSB-51.34, Vapour Barrier, Polyethylene Sheet, for Use in Building Construction.

1.2 ACTION AND INFORMATIONAL SUBMITTALS

.1 Provide submittals in accordance with Section 01 33 00

.2 Product Data:
  .1 Submit manufacturer's printed product literature, specifications and datasheet and include:
    .1 Product characteristics.
    .2 Performance criteria.
    .3 Limitations.

.3 Quality assurance submittals:
  .1 Certificates: submit certificates signed by manufacturer certifying that materials comply with specified performance characteristics and physical properties.
  .2 Instructions: submit manufacturer's installation instructions and comply with written recommendations or specifications, including product technical bulletins, handling, storage and installation instructions, and datasheet.

PART 2 PRODUCTS

2.1 SHEET VAPOUR BARRIER

.1 Polyethylene film: to CAN/CGSB-51.34, 0.10 mm thick.

PART 3 EXECUTION

3.1 INSTALLATION

.1 Ensure underslab work has been complete, and compacted granular is ready for pouring of slabs.

.2 Use sheets of largest practical size to minimize joints.

.3 Inspect for continuity. Repair punctures and tears with sealing tape before work is concealed.

3.2 LAP JOINT SEALS

.1 Lap adjoining sheets minimum 150mm.

END OF SECTION

PART 1 General

1.1 REFERENCES

.1 Canadian General Standards Board (CGSB))
- .1 CAN/CGSB-19.24M, Multi-Component, Chemical Curing Sealing Compound.
- .2 CGSB 19-GP-14M, Sealing Compound, One Component, Butyl-Polyisobutylene Polymer Base, Solvent Curing.

1.2 ACTION AND INFORMATIONAL SUBMITTALS

.1 Provide submittals in accordance with Section 01 33 00

.2 Product Data:
- .1 Submit manufacturer's printed product literature, specifications and datasheet and include product characteristics, performance criteria, physical size, finish and limitations. Product characteristics.

.3 Quality Assurance Submittals: submit following in accordance with Section 01 45 00.
- .1 Certificates: submit certificates signed by manufacturer certifying that materials comply with specified performance characteristics and physical properties.
- .2 Manufacturer's Instructions: submit manufacturer's installation instructions and special handling criteria, installation sequence and cleaning procedures.

1.3 QUALITY ASSURANCE

.1 Qualifications:
- .1 Applicator: company specializing in performing work of this section with minimum five years' experience with installation of air/vapour barrier systems.
  - .1 Completed installation must be approved by the material manufacturer.
- .2 Applicator: company:
  - .1 Currently licensed by Canadian certifying organization.
  - .2 Must maintain their license throughout the duration of the project.
  - .3 Approved by Manufacturer.

1.4 DELIVERY, STORAGE AND HANDLING

.1 Deliver, store and handle materials in accordance with manufacturer's written instructions.

.2 Clean spills and leave area as it was prior to spill.

1.5 AMBIENT CONDITIONS

.1 Install solvent curing sealants and vapour release adhesive materials in open spaces with ventilation.

.2 Ventilate enclosed spaces.

.3 Maintain temperature and humidity recommended by materials manufactures before, during and after installation.

1.6 WARRANTY

.1 Provide a written warranty for work of this section from Manufacturer for failure due to defective materials and from contractor for failure due to defective installation workmanship for five (5) years respectively.

.2 To include coverage of installed sealant and sheet materials which:
- .1 Fail to achieve air tight and watertight seal.
- .2 Exhibit loss of adhesion or cohesion.
- .3 Do not cure.

PART 2 PRODUCTS

2.1 SHEET MATERIALS

.1 Cold Fluid-Applied Waterproofing (Below Grade): Single component, asphalt emulsion formulated for application to damp and green concrete.
- .1 Thickness: 1.5mm (60mils) min.
- .2 VOC Content: Less than 72 g/L.
- .3 Elongation, ASTM D412: 800%
- .4 Low Temperature Flexibility and Crack Bridging, ASTM C 836: Pass.
- .5 Peel Adhesion, ASTM C836: Pass.
- .6 Basis of Design Product: Tremco, Inc., TREMproof 260.

.2 Sheet Seal Type 1 – Above Grade: Sheet air/vapour barrier membrane, SBS modified bitumen, self-adhering sheet membrane complete with a cross-laminated polyethylene film with the following physical properties:
- .1 Thickness: 1.0 mm (40 mils),
- .2 Air leakage: <0.005 L/s.m² @ 75 Pa to ASTM E283-91,
- .3 Tested to ASTM E 2357 for the air barrier assembly,
- .4 Water vapour permeance: 1.6 ng/Pa.m².s (0.03 perms) to ASTM E96,
- .5 Low temperature flexibility: -30 °C to CGSB 37-GP-56M,
- .6 Elongation: 200% to ASTM D412-modifed.
- .7 Acceptable Material: Blueskin SA, SA LT or approved equivalent.

.3 Expansion joint membranes: Flexible flashing membrane composed of combination of butyl and EPDM polymers, and reinforced with polyester fabric, 1.2 mm (47 mills) thick.
- .1 Acceptable Material: “990-26” by Bakor.

.4 Through-wall flashing:
- .1 Flexible flashing:
  - .1 Materials: pressure-sensitive membrane of SBS rubberized asphalt fully laminated to a yellow film of crossed polyethylene compatible with air barriers made the same way.
  - .2 Dimensions: Min. strip 1.0 mm thick x 300mm or 450mm.
  - .3 Acceptable Material: BlueSkin TWF membrane by Bakor or approved equivalent.
- .2 Rigid support under the flexible flashing: flashing in galvanized steel with throat. 0.607 mm thick.

2.2 SEALANTS

.1 Sealants in accordance with Section 07 92 00.

.2 Butyl Sealant Type A: CGSB 19-GP-14M.

.3 Rubberized sealant: One-part, thermoplastic rubber based sealant, as recommended by the membrane manufacturer. Acceptable product: Bakor Polybitume, supplied in caulking tubes.

.4 Primer: as recommended by sealant manufacturer.

.5 Substrate Cleaner: non-corrosive type recommended by sealant manufacturer and compatible with adjacent materials.

2.3 ADHESIVES AND PRIMERS

.1 Mastic Adhesive Type 1: compatible with sheet seal and substrate, thick mastic of uniform knife grade consistency.

.2 Adhesive Type 2: compatible with sheet seal and substrate, permanently non-curing.

.3 Sheet membrane primer: as recommended by the membrane manufacturer for each specific application.

2.4 ACCESSORIES

.1 Mastic Adhesive Type 1: compatible with sheet seal and substrate, thick mastic of uniform knife grade consistency.

.2 Adhesive Type 2: compatible with sheet seal and substrate, permanently non-curing.

.3 Sheet membrane primer: as recommended by the membrane manufacturer for each specific application.

PART 3 EXECUTION

3.1 MANUFACTURER'S INSTRUCTIONS

.1 Compliance: comply with manufacturer's written recommendations or specifications, including product technical bulletins, handling, storage and installation instructions, and data sheets.

3.2 EXAMINATION

.1 Verify that surfaces and conditions are ready to accept work of this section.

.2 Ensure surfaces are clean, dry, sound, smooth, continuous and comply with air barrier manufacturer's requirements.

.3 Report unsatisfactory conditions to Consultant in writing.

.4 Do not start work until deficiencies have been corrected. Beginning of Work implies acceptance of conditions.

3.3 PREPARATION

.1 Remove loose or foreign matter, which might impair adhesion of materials.

.2 Ensure substrates are clean of oil or excess dust; masonry joints struck flush, and open joints filled; and concrete surfaces free of large voids, spalled areas or sharp protrusions.

.3 Ensure substrates are free of surface moisture prior to application of self-adhesive membrane and primer.

.4 Ensure metal closures are free of sharp edges and burrs.

.5 Prime substrate surfaces to receive adhesive and sealants in accordance with manufacturer's instructions.

3.4 INSTALLATION

.1 Install materials in accordance with manufacturer's instructions

.2 Apply sealant within recommended application temperature ranges. Consult manufacturer when sealant cannot be applied within these temperature ranges.

.3 Provide strips of air barrier material where indicated and wherever necessary to maintain the continuity of the air barrier at the interface between different construction assemblies.

.4 Use transition strips where necessary to form a continuous air seal to all window and door frame sections and other penetrations. Install 300 mm strip of membrane to effect tie-in. Overlap membrane minimum 75 mm.

3.5 FIELD QUALITY CONTROL

.1 Manufacturer's Field Services:
- .1 Obtain written report from manufacturer verifying compliance of Work, in handling, installing, applying, protecting and cleaning of product and submit Manufacturer's Field Reports.
- .2 Provide manufacturer's field services consisting of product use recommendations and periodic site visits for inspection of product installation in accordance with manufacturer's instructions.

.2 Testing
- .1 Air leakage testing as directed by Commissioning Agent and paid for by Contractor will be performed by professional testing agency for the locations selected at random for penetrations, laps, corners, etc.
- .2 Conform to Test standards E283 (lab) and E783 (field) for test pressures and maximum allowable air leakage rate.
- .3 Testing will be witnessed by Commissioning Agent and test reports will be signed by tester, site representative and contractor.
- .4 Inform Commissioning Agent 48 hours prior to required testing.

3.6 CLEANING

.1 Proceed in accordance with Section 01 74 11.

.2 On completion and verification of performance of installation, remove surplus materials, excess materials, rubbish, tools and equipment.

3.7 PROTECTION OF WORK

.1 Do not permit adjacent work to damage work of this section.

.2 Ensure finished work is protected from climatic conditions.

END OF SECTION

PART 1 GENERAL

1.1 RELATED REQUIREMENTS

.1 Section 05 41 00 - Structural Metal Stud Framing.

.2 Section 07 21 00 - Building Insulation.

.3 Section 07 27 00 - Air Barriers and Waterproofing.

.4 Section 07 61 00 - Sheet Metal Roofing.

.5 Section 07 92 00 - Joint Sealants.

.6 Section 09 21 16 - Gypsum Board Assemblies.

1.2 REFERENCE STANDARDS

.1 American Society of Mechanical Engineers (ASME)
- .1 ASME B18.6.3-2013, Machine Screws, Tapping Screws, and Metallic Drive Screws (Inch Series).

.2 American Society for Testing and Materials (ASTM):
- .1 ASTM A653 / A653M - 19a, Standard Specification for Steel Sheet, Zinc-Coated (Galvanized) or Zinc-Iron Alloy-Coated (Galvannealed) by the Hot-Dip Process

.3 CSA Group (CSA)
- .1 CSA B111-1974(R2003), Wire Nails, Spikes and Staples.

.4 Underwriters Laboratories (UL)
- .1 UL 2761 Sealants and Caulking Compounds

1.3 ADMINISTRATIVE REQUIREMENTS

.1 Pre-Installation Meetings:
- .1 Convene pre-installation meeting 1 week prior to beginning work of this Section and on-site installation, with Contractor's Representative and Consultant in accordance with Section 01 31 19 - Project Meetings to:
  - .1 Verify project requirements.
  - .2 Review installation and substrate conditions.
  - .3 Co-ordination with other construction subtrades.
  - .4 Review manufacturer's written installation instructions and warranty requirements.

1.4 DESIGN CRITERIA

.1 Appearance: Exposed surfaces free of distortion, twist, waves and buckles. Exposed fasteners to be of the same finish and colour as the surrounding surface, equally spaced and in true alignment. Exposed fastener locations to be approved by the Consultant.

.2 Structural loads: Resist positive and negative wind pressures expected in this geographical area with a maximum allowable deflection of 1/180 of span. Components shall not vibrate when subjected to the effects of wind.

.3 Windload data for the location of the site TO OBC 2015.

.4 Moisture control: prevent infiltration of water and snow into siding system. Provide means of draining space between insulation and exterior skin, in accord with NRC Rain Screen Principles.

.5 Thermal movement: Design metal siding system to allow for thermal movement of components caused by an ambient temperature range of -40ºC to 40ºC without causing buckling, failure of joint seals, undue stress on fasteners and other detrimental effects.

.6 Structural movement: accommodate movement between siding system and building structure caused by structural movement, without permanent distortion, racking of joints, breakage of seals or water penetration.

.7 Water penetration: provide continuous and uninterrupted barrier against water penetration, effectively sealed at laps, penetrations and terminations.

1.5 ACTION AND INFORMATIONAL SUBMITTALS

.1 Submit in accordance with Section 01 33 00 - Submittal Procedures.

.2 Product Data:
- .1 Submit manufacturer's instructions, printed product literature and data sheets for metal siding and include product characteristics, performance criteria, physical size, finish and limitations.
- .2 Submit 2 copies of WHMIS SDS in accordance with Section.
- .3 Indicate VOC's for caulking materials during application and curing.

.3 Shop Drawings:
- .1 Submit drawings stamped and signed by professional engineer registered or licensed in ProvinceTerritory, Canada.
- .2 Indicate dimensions, profiles, attachment methods, schedule of wall elevations, trim and closure pieces, soffits, fascia, furring, and related work.

.4 Samples:
- .1 Submit duplicate 300 mm x 300 mm samples of siding material, of colour and profile specified.

1.6 CLOSEOUT SUBMITTALS

.1 Submit in accordance with Section 01 78 00 - Closeout Submittals.

.2 Operation and Maintenance Data: submit operation and maintenance data for installed products for incorporation into manual.

.3 Warranty Documentation: submit warranty documents specified.

1.7 QUALITY ASSURANCE

.1 Installer Qualifications: minimum three years documented experience with products specified.

.2 Mock-Up:
- .1 Provide site mock-up for work of this Section indicating methods and materials, and procedures proposed to achieve final results in accordance with Section 01 45 00 - Quality Control, and to comply with following requirements, using materials indicated for completed work:
  - .1 Build mock-ups in location and of size as directed by Consultant.
  - .2 Obtain Consultant's acceptance of mock-ups before starting construction; mock-up used

throughout construction period as standard of acceptance for subsequent work.

.3 Mock-up may form part of permanent structure when accepted by Consultant; repair or replace unacceptable mock-ups at no additional cost to Owner.

1.8 DELIVERY, STORAGE AND HANDLING

.1 Deliver, store and handle materials in accordance with Section 01 61 00 - Common Product Requirements and with manufacturer's written instructions.

.2 Delivery and Acceptance Requirements: deliver materials to site in original factory packaging, labelled with manufacturer's name and address.

.3 Storage and Handling Requirements:
- .1 Store materials off ground in dry location and in accordance with manufacturer's recommendations in clean, dry, well-ventilated area.
- .2 Store and protect steel siding from nicks, scratches, and blemishes.
- .3 Replace defective or damaged materials with new.

.4 Packaging Waste Management: remove for reuse and return by manufacturer of pallets,crates,padding,and packaging materials as specified in Waste Reduction Workplan in accordance with Section 01 74 19 - Waste Management and Disposal.

1.9 SITE CONDITIONS

.1 Execute work of this Section within environmental conditions (temperature, humidity, and ventilation) within limits recommended by manufacturer.

1.10 WARRANTY

.1 Manufacturer's warranty: Submit, for Consultant acceptance, manufacturer's standard warranty document executed by authorized company official. Manufacturer's warranty in addition to and not limit other rights Owner may have under Contract Documents.

PART 2 PRODUCTS

2.1 MATERIALS

.1 Steel siding: Fabricated from commercial grade to ASTM A 653 SS grade 33 Architectural panel with Z275 zinc coating:
- .1 Profile: Ideal Roofing UA 1200.
- .2 Finish coating: factory precoated with modified silicone paint finish, 2 coat system dry paint film thickness of 0.025 mm.
- .3 Colour: Metallic Finish Carbon (9740)
- .4 Back coating: ASTM A 653/A 653M, grade A, Z275coating designation.
- .5 Thickness: .81 mm base metal thickness.
- .6 Standard of Acceptance: Ideal Roofing Urban Accent Series.

.2 SFT-1 Steel Soffit: Fabricated from commercial grade to ASTM A 653 with Z275 zinc coating:
- .1 Profile: flat sheet 'V' crimped for stiffness, vented 0.1 m² of opening for every 30 m² of building area preformed with elongated slits and small perforations insect screen cover at vents.
- .2 Finish coating: factory precoated with modified silicone paint finish, 2 coat system dry paint film thickness of 0.025 mm.
- .3 Colour: Regent Grey (56082)
- .4 Thickness: .81 mm base metal thickness.

.3 Steel fascia facings and exposed trim: Fabricated from commercial grade to ASTM A 653 with Z275 zinc coating:
- .1 Profile: custom and as indicated.
- .2 Finish coating: factory precoated with modified silicone paint finish, 2 coat system dry paint film thickness of 0.025 mm.
- .3 Colour: to be selected by Consultant from the full range of colour.
- .4 Thickness: .81 mm base metal thickness.

.4 Liner Panel: Fabricated from commercial grade to ASTM A 653 SS grade 33 Architectural panel with Z275 zinc coating:
- .1 Finish coating: factory precoated with modified silicone paint finish, 2 coat system dry paint film thickness of 0.025 mm.
- .2 Colour: to be selected by Consultant from the full range of colour.
- .3 Back coating: ASTM A 653/A 653M, grade A, Z275coating designation.
- .4 Thickness: .54 mm base metal thickness.
- .5 Standard of Acceptance: Ideal Roofing, Colonial Siding Series.

.5 Fasteners: nails to CSA B111, screws to **ASME B18.6**.3 galvanized steel, purpose made.

.6 Sealants: in accordance with Section 07 92 00 - Joint Sealants.

.7 Exterior wall sheathing paper: to CAN/CGSB-51.32, single plylaminatedspunbond olefin type coatedimpregnatedas indicated.

2.2 ACCESSORIES

.1 Exposed trim: inside corners, outside corners, cap strip, drip cap, undersill trim, starter strip and window/door trim of same material, colourandgloss as cladding, with fastener holes pre-punched.

.2 Z-bar Girt System: consisting of two layers of z bar girts in opposite directions with neoprene gasket separating girts at joints. Engineered girts to thicknesses and depths to suite the application and as indicated. Finish girts in conformance with ASTM A 653/A 653M.

PART 3 EXECUTION

3.1 EXAMINATION

.1 Verification of Conditions: verify conditions of substrate previously installed under other Sections or Contracts acceptable in accordance with manufacturer's written instructions.
- .1 Visually inspect substrate in presence of Consultant.
- .2 Inform Consultant of unacceptable conditions immediately upon discovery.
- .3 Proceed with installation only after unacceptable conditions remedied and after receipt of written approval to proceed from Consultant.

3.2 PREPARATION

.1 Clean surfaces thoroughly prior to installation.

.2 Repair substrate flaws or defects before applying siding or soffits.

.3 Fur surfaces to even plane and free from obstructions.

.4 Prepare surfaces using methods recommended by manufacturer for achieving best result for substrate under project conditions.

3.3 MANUFACTURER'S INSTRUCTIONS

.1 Compliance: comply with manufacturer's written data, including product technical bulletins, product catalogue installation instructions, product carton installation instructions, and data sheets.

3.4 INSTALLATION

.1 Install steel siding in accordance with manufacturer's written instructions.

.2 Install continuous starter strips, inside and outside corners, edgings, soffit, drip, cap, sill and window/door opening flashings as indicated.

.3 Install outside corners, fillers and closure strips with carefully formed and profiled work.

.4 Install soffit and fascia cladding as indicated.

.5 Maintain joints in exterior cladding, true to line, tight fitting, hairline joints.

.6 Attach components in manner not restricting thermal movement.

.7 Caulk junctions with adjoining work with sealant. Do work in accordance with Section 07 92 00 - Joint Sealants.

3.5 CLEANING

.1 Progress Cleaning: clean in accordance with Section 01 74 11 - Cleaning.
  .1 Leave Work area clean at end of each day.

.2 Final Cleaning: upon completion remove surplus materials, rubbish, tools and equipment in accordance with Section 01 74 11 - Cleaning.

.3 Waste Management: separate waste materials for reuseandrecycling in accordance with Section 01 74 19 - Waste Management and Disposal.
  .1 Remove recycling containers and bins from site and dispose of materials at appropriate facility.

3.6 PROTECTION

.1 Protect installed products and components from damage during construction.

.2 Repair damage to adjacent materials caused by preformed metal siding installation.

END OF SECTION

PART 1 GENERAL

1.1 RELATED WORK

.1 Section 05 21 00 – Open Web Steel Joists

.2 Section 05 31 00 – Steel Deck

.3 Section 07 62 00 – Sheet Metal Flashing and Trim

.4 Section 07 92 00 – Joint Sealants

.5 Division 22 - Plumbing

1.2 REFERENCE STANDARDS

.1 CSA International
- .1 CSA A123.4-04, Asphalt for Constructing Built-Up Roof Coverings and Waterproofing Systems.

.2 ASTM International Inc.
- .1 ASTM C578-01, Standard Specification for Rigid Cellular Polystyrene Thermal Insulation.
- .2 ASTM C 726-05, Standard Specification for Mineral Fiber Roof Insulation Board.
- .3 ASTM D 41-05, Standard Specification for Asphalt Primer Used in Roofing, Dampproofing, and Waterproofing.
- .4 ASTM D 6162-00a, Standard Specification for Styrene Butadiene Styrene (SBS) Modified Bituminous Sheet Materials Using a Combination of Polyester and Glass Fibre Reinforcements.
- .5 ASTM D 6163-00e1, Standard Specification for Styrene Butadiene Styrene (SBS) Modified Bituminous Sheet Materials Using Glass Fibre Reinforcements.
- .6 ASTM D 6164-05, Standard Specification for Styrene Butadiene Styrene (SBS) Modified Bituminous Sheet Materials Using Polyester Reinforcements.

.3 Canadian General Standards Board (CGSB)
- .1 Prefabricated membrane, complies with CAN/CGSB 37-GP-56M (9th draft)-1985, Membrane Modified, Bituminous, Prefabricated, and Reinforced for Roofing.

.4 Canadian Roofing Contractors Association (CRCA)
- .1 CRCA Roofing Specifications Manual.

.5 Underwriters Laboratories' of Canada (ULC)
- .1 CAN/ULC-S701-05, Standard for Thermal Insulation, Polystyrene, Boards and Pipe Covering.
- .2 CAN/ULC-S704-03, Standard for Thermal Insulation, Polyurethane and Polyisocyanurate Boards, Faced.

1.3 COMPATIBILITY

.1 All waterproofing materials will be provided by the same manufacturer.

1.4 QUALITY ASSURANCE AND ENVIRONMENTAL MANAGEMENT

.1 The manufacturer of elastomeric bitumen products will provide proof of ISO 9001 and ISO 14001 Certifications.

1.5 CONTRACTOR QUALIFICATIONS

.1 Roofing contractors and sub-contractors must, when tendering or performing work, possess a roofing contractor operating license.

.2 The work of this Section shall be carried out by a Roofing Contractor who is certified by the roofing material manufacturer, as an approved installer and who is a member in good standing of the CRCA or the applicable affiliated provincial roofing contractors' association.

.3 Roofing work shall be performed only by skilled applicators, employed by a company operating all adequate and necessary equipment required to execute such work.

1.6 MANUFACTURER'S REPRESENTATIVE

.1 The work shall be carried out under the general supervision of a representative of the roofing material manufacturer.

.2 At all times, the Roofing Contractor shall permit and facilitate access to the work site by the said manufacturer's representative.

1.7 INSPECTION

.1 Roofing installation inspection will be done by the roof consultant chosen by the owner.

.2 All inspection fees will be paid by the owner.

.3 Cooperate fully with the roof consultant.

1.8 ACTION AND INFORMATIONAL SUBMITTALS

.1 Submit a report[s], issued by a certified materials testing laboratory, attesting that the roofing system offered, was tested in accordance with CSA A 123.21-04, Standard Test Method for Dynamic Wind Uplift Resistance of Mechanically Attached Membrane Roofing Systems. Test results shall demonstrate the roofing system sustained wind uplift pressures of -0.7 kPa for the field of the roof, -1.1 kPa for the edge of the roof, and –1.7 kPa for the corners of the roof. The edge and corner area is defined as 2m from each edge of the roof.

.2 Submit a document issued by the CSA certifying that the roofing system offered meets the requirements of CAN/ULC-S107-03 "Standard Methods of Fire Tests of Roof Coverings Class C.

.3 Provide submittals in accordance with Section 01 33 00 - Submittal Procedures.

.4 Product Data:
- .1 Provide two copies of most recent technical waterproofing components data sheets describing materials' physical properties and include product characteristics, performance criteria, physical size, finish and limitations.
- .2 Provide two copies of WHMIS MSDS in accordance with Section 01 35 29.06 - Health and Safety Requirements and Section 01 35 43 - Environmental Procedures, and indicate VOC content for:
  - .1 Primers.
  - .2 Asphalt.
  - .3 Sealers.
  - .4 Filter fabric.

.5 Provide shop drawings and indicate:
- .1 Flashing, control joints, tapered insulation details.
- .2 Layout and roof slopes for tapered insulation.

.6 Manufacturer's Certificate: certify that products meet or exceed specified requirements.

.7 Test and Evaluation Reports: submit laboratory test reports certifying compliance of bitumens and membrane with specification requirements.

.8 Manufacturer's Installation Instructions: indicate special precautions required for seaming the membrane.

.9 Manufacturer's field report: in accordance with Section 01 45 00 - Quality Control.

.10 Reports: indicate procedures followed, ambient temperatures and wind velocity during application. Submit to consultant within 3 days of date.

1.9 ADMINISTRATIVE REQUIREMENTS

.1 Convene a pre-installation meeting prior to start of waterproofing works, with the roofing contractor's representative, the architect, and the owner. The purposes of this meeting is to review installation conditions particular to this project
- .1 Verify project requirements.
- .2 Review installation and substrate conditions.
- .3 Co-ordination with other building sub-trades.
- .4 Review manufacturer's installation instructions and warranty requirements.

1.10 DELIVERY, STORAGE, AND HANDLING

.1 All materials will be delivered and stored in conformance with the requirements recommended by the manufacturer; they must remain in their original packaging, displaying the manufacturer's name, product name, weight, and reference standards, as well as all other indications or references considered standard.

.2 At all times, materials will be adequately protected and stored in a dry and properly ventilated area, away from any welding flame or spark and sheltered from the elements or any harmful substance. Only materials destined for same-day use can be removed from this storage area. In cold weather, these materials should be stored in a heated area at a minimum temperature of $+10^0$C and removed prior to application. If rolls cannot be stored in a heated environment, they may be pre-conditioned before installation. For precise description, please consult SOPREMA'S "Roofers' Guide" on membrane application procedures.

.3 Store adhesives and emulsion-based waterproofing mastics at a minimum $+5^0$C. Store adhesives and solvent-based mastics at sufficient temperatures to ensure ease of application.

.4 Materials delivered in rolls will be carefully stored upright; flashing will be stored to avoid creasing, buckling, scratches or any other possible damage.

.5 Avoid material overloads which may affect the structural integrity of specific roof areas.

.6 Handle waterproofing materials in accordance with manufacturer's written directives, to prevent damage or loss of performance.

.7 Store and manage hazardous materials in accordance with Section 01 35 29.06 - Health and Safety Requirements and Section 01 35 43 - Environmental Procedures.

1.11 FIRE PROTECTION

.1 Prior to the start of work, conduct a site inspection to establish safe working practices and make sure that all procedures and proposed changes are approved to minimize the risk of fires.

.2 Respect safety measures described in the SOPREMA Specifications Manual as well as local association recommendations.

.3 At the end of each workday, use a heat detector gun to spot any smouldering or concealed fire. Job planning must be organized to ensure workers are still on location at least one hour after torch application.

.4 Never apply the torch directly to old and wood surfaces.

.5 Throughout roofing installation, maintain a clean site and have one approved ABC fire extinguisher within 6 metres of each roofing torch. Respect all safety measures described in technical data sheets. Torches must never be placed near combustible or flammable products. Torches should never be used where the flame is not visible or cannot be easily controlled.

1.12 SITE CONDITIONS

.1 Ambient Conditions
- .1 Do not install waterproofing when temperature remains below -18 degrees C for torch application, or -5 degrees C to manufacturers' recommendations for mop application.
- .2 Minimum temperature for solvent-based adhesive is -5 degrees C.

.2 Install waterproofing on dry deck, free of snow and ice, use only dry materials and apply only during weather that will not introduce moisture into waterproofing system.

1.13 WARRANTY

.1 Membrane manufacturer's warranty: In addition to the 12 months warranty prescribed by General Conditions of the Contract, provide a written warranty, signed and issued in the name of the Owner, stating that the membrane manufacturer will guarantee to repair at his own expense any leaks in the roofing membrane or flashing membrane resulting from defects in the manufacture of the membrane and/or from faulty workmanship for a period of ten (10) years from the date of the Certificate of Substantial Completion.

.2 Roofing Contractor's warranty: In addition to the 12 months warranty prescribed by the General Conditions of the Contract, provide a written warranty, signed and issued in the name of the Owner, stating that the Roofing Contractor will guarantee to repair at his own expense any leaks in the roofing membrane or flashing membrane resulting from faulty workmanship, in accordance with the General Conditions of the Contract but for a period of five (2) years from the date of the Certificate of Substantial Performance of the Contract

PART 2 PRODUCTS

2.1 GENERAL

.1 This specification is based on modified bituminous sheet membrane roofing as manufactured by Soprema Inc.

.2 Subject to compliance with the specification requirements, equivalent products by the following manufacturers are acceptable alternatives:

.1 IKO Industries Ltd.
.2 Henry Co.

.3 Requests for substitution will be considered in accordance with provisions of Section 01 25 00 “Substitution Procedures”. Acceptance of alternative products is subject to the approval of the Consultant.

.4 All components of the roofing system shall be obtained from or approved by a single manufacturer.

2.2 VAPOUR BARRIER SUPPORT PANELS

.1 Fibre-reinforced gypsum roof board to CAN/ULC S102 and ASTM D3273, 1219 mm wide x 2438 mm long x 13 mm thick, ends and edges square.

.2 Acceptable Product: SECUROCK GYPSUM-FIBRE ROOF BOARD by CGC.

.3 Fasteners: Size and type in accordance with FM requirements and the membrane manufacturer’s recommendations.

2.3 VAPOUR RETARDER

.1 Self-adhesive Air/Vapour Barrier:
.1 Description: Self-adhesive air/vapour barrier membranes composed of SBS modified bitumen, with surface screen mad of high-density polyethylene laminated between two layers of polyethylene films. The self-adhesive underface is protected with a silicone plastic release film. Water vapour permeability: 0.92 ng/Pa.s.m^2 (0.016 Perm). Standard of acceptance: SOPRAVAP’R by Soprema.

2.4 INSULATION

.1 Board Insulation: Closed-cell polyisocyanurate foam insulation board, integrally laminated to inorganic/organic felt facers, to CAN/ULC-S704, Type 3, CFC-free and conforming to Environment Canada Ozone-Depleting Substances regulations, minimum RSI 1.04 M2.^{o}C/W per 25 mm thickness, maximum board size 1219 mm x 1219 mm; thickness to obtain an insulation value of $m^{2.o}$C/W (R 40).

.2 Sloped insulation: Factory pre-engineered tapered polyisocyanurate sloped insulation compatible with the roof membrane system. Provide slopes at roof drain areas as required to obtain roof slopes of no less than 1:50 (2%). Including the upslope side of HVAC equipment and other curbs to direct run-off from accumulating behind the units. Standard of Acceptance: Johns Manville, Atlas, Accu-plane, Posi-slope.

2.5 MEMBRANE SYSTEMS

.1 Asphaltic-Support Board and Base Sheet with Factory-Laminated Membrane
.1 Description: SBS modified base sheet membrane and polyester reinforcement, factory-laminated on a semi-rigid asphaltic board. The board measures 0.91 m x 2.44 m (3 ft x 8 ft). The top surface is covered with thermofusible plastic film. The membrane side lap is 60% self-adhesive and 40% thermofusible.
.2 Thickness: 3.2 mm (1/8 in)
.3 In conformance with: CGSB 37.56-M (9th Draft).
.4 Standard of Acceptance: SOPRASMART BOARD 180 by SOPREMA

.2 Base Sheet Membrane for Flashings and Parapets
- .1 Description: Membrane composed of SBS modified bitumen and glass mat reinforcement. The surface is covered with a thermofusible plastic film and the underface is covered with a release protection film. The surface shall be marked with three (3) chalk lines to ensure proper roll alignment.
- .2 In conformance with: CGSB 37.56-M (9th Draft).
- .3 Standard of Acceptance: SOPRAFLASH FLAM STICK by SOPREMA

.3 Roofing Cap Sheet Membrane for Field Surfaces
- .1 Description: Roofing membrane composed of SBS modified bitumen with a non-woven polyester reinforcement and elastomeric bitumen. The surface is protected by coloured granules. The underface is covered with a thermofusible plastic film.
- .2 In conformance with: CGSB 37.56-M (9th Draft).
- .3 Specified Product: SOPRALENE FLAM 250 GR by SOPREMA

.4 Roofing Cap Sheet Membrane for Flashings and Parapets
- .1 Description: Roofing membrane composed of SBS modified bitumen with a non-woven polyester reinforcement and elastomeric bitumen. The surface is protected by coloured granules. The underface is covered with a thermofusible plastic film.
- .2 In conformance with: CGSB 37.56-M (9th Draft).
- .3 Specified Product: SOPRALENE FLAM 250 GR by SOPREMA

.5 Colour Choices for Roofing Cap Sheet Membrane Granules
- .1 For field surfaces: white.
- .2 For walkway surfaces: grey.

.6 Starter Roll
- .1 Description: Waterproofing membranes composed of SBS modified bitumen, covered with granules on surface, with a 100 mm (4 in) selvedge on both sides. The underface is covered with a thermofusible plastic film.
- .2 In conformance with: CGSB 37.56-M (9th Draft).
- .3 Specified Product: STARTER FLAM GR by SOPREMA

2.6 ACCESSORY MEMBRANES

.1 Cover Strip
- .1 Description: Membrane strip of 330 mm (13 in) made of SBS modified bitumen with a composite reinforcement. Both faces are covered with a plastic thermofusible film. The strip ensures water-tightness in the end laps.
- .2 In conformance with: ASTM D6162.
- .3 Specified product: SOPRALAP by SOPREMA.

2.7 PRIMER

.1 Primer for Thermofusible Membranes
- .1 Description: Primer made of bitumen, volatile solvents and adhesive resins. Used as primer to improve the adhesion of thermofusible waterproofing membranes.
- .2 Specified product: ELASTOCOL 500 by SOPREMA.

.2 Primer for Self-Adhesive Membranes
- .1 Description: Primer composed of SBS synthetic rubber, adhesive resins and volatile solvents. Used as primer to improve the adhesion of self-adhesive membranes.
- .2 Specified product: ELASTOCOL STICK by SOPREMA.

2.8 ADHESIVES

.1 Insulation Adhesive
- .1 Description: Two-component, quick-setting, low-expansion foam urethane adhesive that can be applied at any temperature.
- .2 Specified product: DUOTACK by SOPREMA

2.9 FLAME-STOP MEMBRANE

.1 Description: Self-adhesive membrane composed of a reinforced glass mat and SBS modified bitumen designed to prevent flames from penetrating into empty spaces and openings while installing heat-welded membranes.

.2 Acceptable Products: Sopraguard Tape by Soprema

2.10 COMPLEMENTARY WATERPROOFING PRODUCTS

.1 Waterproofing mastic:
- .1 Description: Mastic made of synthetic rubbers, plasticized with bitumen and solvents. Aluminum pigments are added to SOPRAMASTIC ALU to provide greater resistance to U.-V.
- .2 Acceptable Product: Sopramastic Alu by Soprema.

.2 Pitch Pocket Filler
- .1 Description: Polyurethane pitch pocket system made of pre-fabricated modules of various sizes, with interlocking compounds and solvent-free mastic, composed of two-component urethane and mono-component elastomeric sealant.
- .2 Specified product: INTERCLIP SYSTEM by SOPREMA

.3 Sealing product
- .1 Description: Composed of a bitumen/polyurethane waterproofing mono-component and polyester reinforcements. Designed to finish upstands and details. (no-flame installation).
- .2 Acceptable Product: Alsan Flashing by Soprema

2.11 ROOF WALKWAYS

.1 Roof membrane walkways:
- .1 Description: Waterproofing membrane composed of SBS modified bitumen and unwoven polyester reinforcement. The top face is covered with coloured granules chosen by the Consultant; the underface is protected by a thermofusible film.
- .2 Acceptable Product: Sopralene Flam 250 gr by Soprema.

2.12 ACCESSORIES

.1 .1 Mechanical equipment curbs: Seismic type specifically designed to support mechanical equipment on SBS modified bitumen roofs. Size and configuration to suit application.

.2 Individual equipment supports: Heavy-duty aluminum or steel post and base, seamless spun-aluminum sleeve, fully insulated. Type and size to suit specific application. Standard of acceptance: Lexcor Flash-Tite to suit application.

.3 Roof drains: Refer to Division 22 "Plumbing".

PART 3 EXECUTION

3.1 SURFACE EXAMINATION AND PREPARATION

.1 Surface examination and preparation must be completed in conformance with instructions in the membrane manufacturer’s technical documentation.

.2 Before roofing work begins, the owner's representative and roofing foreman will inspect and approve deck conditions (including slopes and wood blocking) as well as upstands and parapets, construction joints, roof drains, plumbing vents, ventilation outlets and others. If necessary, a non-conformity notice will be issued to the contractor so that required corrections can be made. The start of roofing work will mean roofing conditions are acceptable for work completion.

.3 Do not begin any work before surfaces are smooth, dry, and free of ice and debris. Use of calcium or salt is forbidden for ice or snow removal.

.4 Be sure plumbing, carpentry and all other work has been duly completed.

.5 No materials will be installed during rain or snowfall.

3.2 METHOD OF INSTALLATION

.1 Prepare surfaces and complete waterproofing work in conformance with manufacturer's instructions and recommendations.

.2 Install roofing elements on clean and dry surfaces, in conformance with manufacturer's instructions and recommendations.

.3 Roofing work must be completed in a continuous fashion as surfaces are readied and weather conditions permit.

.4 It’s preferable to seal all seams that are not covered by a cap sheet membrane in the same day. The cap sheet cannot be installed if any moisture is present at/in the base sheet seams.

.5 Whenever membranes are torch-applied, a continuous and even bead of molten bitumen must be visible as the membrane is unrolled and torched.

.6 Ensure waterproofing conditions for roofs at all times, including protection during installation work by other trades and progressive protection as work is completed (e.g. vents, drains, etc.).

.7 Complete all work (temporary supports for equipment and bases, disconnection and connection of equipment as needed, moving and lifting of bases, etc.) required for waterproofing beneath equipment and; use qualified trade persons as required. Temporary supports for waterproofing beneath air-conditioning units must be designed to hold supported loads and distribute these loads to avoid structural damage.

3.3 PROTECTION OF IN-PLACE CONDITIONS

.1 Cover walls, walks, slopped roofs and adjacent work where materials hoisted or used.

.2 Use warning signs and barriers. Maintain in good order until completion of Work.

.3 Clean off drips and smears of bituminous material immediately.

.4 Dispose of rain water off roof and away from face of building until roof drains or hoppers installed and connected.

.5 Protect roof from traffic and damage. Comply with precautions deemed necessary by Consultant.

.6 At end of each day's work or when stoppage occurs due to inclement weather, provide protection for completed Work and materials out of storage.

.7 Metal connectors and decking will be treated with rust proofing or galvanization.

.8 Protect finished work to avoid damage during roof installation and material transportation. Assume full responsibility for any damage.

3.4 CLEANING

.1 The work site must be routinely cleared of rubbish and other materials which may hinder roof installation, performance, or present a fire hazard.

.2 Remove bituminous markings from finished surfaces.

.3 In areas where finished surfaces are soiled caused by work of this section, consult manufacturer of surfaces for cleaning advice and complying with their documented instructions.

.4 Repair or replace defaced or disfigured finishes caused by work of this section.

3.5 EQUIPMENT FOR WORK EXECUTION

.1 Maintain all roofing equipment and tools in good working order.

.2 Use torches recommended by Soprema or Manufacturer of the roofing products.

3.6 VAPOUR BARRIER SUPPORT PANELS INSTALLATION ON STEEL DECK

.1 These boards must be adhered by using specified adhesive applied in continuous strips spaced 305 mm (12 in) maximum on the field surface, on the perimeter, and on corners. Cut boards so edges rest on centre of upper ribs. Cut straight lines with adequate tools.

.2 Where slopes change, boards will be cleanly cut (avoid breaking boards) to acquire deck shape. Place boards perpendicular to deck ribs for continuous support at extremities.

.3 .Board joints will be staggered, in half-lengths, and perfectly butted.

3.7 APPLICATION OF PRIMER

.1 Roofing substrates of wood, metal, concrete, masonry or gypsum board surfaces will receive a coat of asphalt primer at a rate of 0.3 to 0..5 l/sq m. (none required for factory-painted metals). All surfaces to be primed must be free of rust, dust or any residue that may hinder adherence. Cover primed surfaces with roofing membrane as soon as possible (on the same day for self-adhesive membranes).

3.8 APPLICATION OF SELF-ADHESIVE VAPOUR RETARDER

.1 Beginning at the bottom of the slope, without adhering the membrane, unroll onto the substrate for alignment. Do not immediately remove the silicone release sheet.

.2 Align the roll parallel to the corrugations of the steel deck. Make sure the membrane overlaps are supported along their entire length.

.3 Peel back one end of the silicone release sheet and adhere this part of the membrane to the substrate. Peel back the remaining release sheet at a 45º angle to avoid wrinkles in the membrane.

.4 If the membrane is not properly aligned, do not try to adjust it. Instead, cut the roll and start again, making sure that it is properly aligned and that it overlaps the end of the misaligned piece by 150 mm.

.5 Overlap adjacent membranes by 75 mm. Overlap end laps by 150 mm. Stagger end laps by at least 300 mm.

.6 Seal to all penetrations (plumbing vents, stacks, sleeves, etc.) to achieve the necessary air seal continuity throughout the roof.

3.9 INSULATION INSTALLATION

.1 Adhere insulation by using specified adhesive applied in continuous strips spaced 305 mm (12 in) on the field surface, on the perimeter, and on corners.

.2 All vertical joints between level boards and sloped modules of two rows of insulation board will be staggered.

.3 Install only as much insulation as can be covered in the same day.

3.10 INSTALLATION OF FLAME-STOP MEMBRANES

.1 Adhere the membrane directly onto an approved substrate by peeling back the silicone release film. Flame stop membrane is designed to prevent flames from penetrating into empty spaces and openings while installing heat-welded membranes.

.2 Unroll the flame-stop membrane onto the insulation, being careful to overlap adjacent selvedges to ensure that the flame will not penetrate the insulation.

3.11 INSTALLATION OF BOARDS AND FACTORY-LAMINATED BASE SHEET

.1 Adhere base sheet board using adhesive applied in continuous strips spaced 305 mm (12 in) on the field surface, on the perimeter, and on corners.

3.12 INSTALLATION OF SELF-ADHESIVE BASE SHEET ON FLASHINGS AND PARAPETS

.1 Apply base sheet flashing only after primer coat is dry.

.2 Before applying membranes, always burn the plastic film from the section to be covered if there is an overlap (inside and outside corners and field surface). For sanded base sheet membranes, apply primer for self-adhesive membrane on the area to be covered at the foot of the parapets.

.3 Cut off corners at end laps of areas to be covered by the next roll.

.4 Each selvedge will overlap the previous one along lines provided for this purpose, and by 150 mm (6 in) at the ends.

.5 Position the pre-cut membrane. Remove 150 mm (6 in) of the silicone release film to hold the membrane in place at the top of the parapet.

.6 Then, gradually peel off the remaining silicone release film, pressing down on the membrane with an aluminum applicator to ensure good adhesion. Use the aluminum applicator to ensure a perfect transition between the flashing and the field surface. Smooth the entire membrane surface with a membrane roller for full adhesion.

.7 Install a reinforcing gusset at all inside and outside corners.

.8 Always seal overlaps at the end of the workday.

.9 Avoid the formation of wrinkles, swellings or fishmouths.

3.13 INSTALLATION OF REINFORCED GUSSETS

.1 Install reinforcing gussets at all inside and outside corners.

.2 Heat-weld the gussets in place after installing base sheet membrane.

3.14 INSTALLATION OF WELDABLE REINFORCING MEMBRANES

.1 Install reinforcing membranes specified according to the typical detailed instructions in the documentation of membrane manufacturer.

3.15 INSTALLATION OF THERMOFUSIBLE CAP SHEET ON FIELD SURFACE

.1 Begin with double-selvedge starter roll. If starter roll is not used, side laps covered with granules must be de-granulated by embedding granules in torch-heated bitumen over a 75-mm (3 in) width.

.2 Starting at drain, Unroll the membrane on the base sheet, taking care to align the edge of the first selvedge with the edge of the roof.

.3 Cut off corners at end laps at areas to be covered by the next roll.

.4 Each selvedge will overlap the previous one along lines provided for this purpose, and will overlap by 150 mm (6 in) at the ends. Space end laps a minimum of 300 mm (12 in).

.5 Heat-weld cap sheet membrane with a torch on the base sheet to create a bleed out of 3 to 6 mm (1/8 to 1/4 in).

.6 During installation, be careful not to overheat the membrane or its reinforcements.

.7 Avoid the formation of wrinkles, swellings or fishmouths.

.8 Avoid walking over finished surfaces; use rigid protective walkways as needed.

3.16 INSTALLATION OF THERMOFUSIBLE CAP SHEET ON FLASHINGS AND PARAPETS

.1 This cap sheet must be installed in one-metre-wide strips (3.25 ft).

.2 Each selvedge will overlap the previous one laterally along lines provided for this purpose, and will overlap by 150 mm (6 in) the field surface. Membranes for flashings must be spaced at least 100 mm (4 in) with respect to the cap sheet membranes on the field surface, to avoid areas of excessive membrane thickness.

.3 Cut off corners at end laps on areas to be covered by the next roll.

.4 Use a chalk line to draw a straight line on the field surface, 150 mm (6 in) from flashings and parapets.

.5 Use a torch and round-nose trowel to embed the surface granules in the layer of hot bitumen, starting from the chalk line on the field surface to the bottom edge of the flashing or parapet, as well as on the granulated vertical surfaces to be overlapped.

.6 This cap sheet will be heat-welded directly to the base sheet membrane, proceeding from bottom to top.

.7 Avoid the formation of wrinkles, swellings or fishmouths.

.8 During installation, be careful not to overheat the membrane and its reinforcements.

3.17 MEMBRANE WALKWAY INSTALLATION

.1 Install membrane walkways respecting requirements previously stipulated for cap sheet installation. Apply primer to cap sheet before installing walkways.

3.18 WATERPROOFING FOR VARIOUS DETAILS

.1 Install waterproofing membranes in conformance with with typical details indicated in technical documentation of the manufacturer.

3.19 ROOF DRAINS

.1 Coordinate with Division 22 to ensure proper seals to roof drains.

.2 Prime all flanges with roof mastic prior to roofing installation. Install membrane and felts continuously over drain then cut out and trim neatly to interior facing. Coat membrane with bitumen and set and secure clamping ring in a bed of mastic as required by the drain design. Ensure that roof screens are secured in place with a mechanical device acceptable to the Consultant before leaving the site.

3.20 PLUMBING VENTS, STACKS AND SLEEVES

.1 Make all roof penetrations watertight.

.2 Trim membrane as required. Set and coat flanges with mastic on top of roof membrane.

.3 Insulate sleeves and soil pipes with glass fibre insulation.

.4 Set caps or collars, seal with caulking to provide watertight seal.

3.21 CURBS, SLEEPERS AND EQUIPMENT SUPPORTS

.1 Provide curbs, sleepers and equipment supports as indicated and as required. Carpentry work by Section 06 10 00 "Rough Carpentry".

.2 Install seismic-type mechanical equipment curbs in accordance with the manufacturer's instructions. Coordinate with the mechanical subcontractor to ensure a proper interface between the curb and the supported equipment.i) Install equipment supports where indicated and where required. Include rooftop camera supports.

END OF SECTION

PART 1 GENERAL

1.1 RELATED REQUIREMENTS

.1 Section 05 12 00 - Structural Steel

.2 Section 05 31 00 – Steel Deck

.3 Section 06 10 00 - Rough Carpentry.

.4 Section 07 21 00 – Building Insulation.

.5 Section 09 21 16 – Gypsum Board Assemblies

1.2 REFERENCE STANDARDS

.1 ASTM International
- .1 ASTM A 653/A 653M-10, Standard Specification for Steel Sheet, Zinc-Coated (Galvanized) or Zinc-Iron Alloy-Coated (Galvannealed) by the Hot-Dip Process.
- .2 ASTM D 523-89(2008), Standard Test Method for Specular Gloss.

.2 Canadian Sheet Steel Building Institute (CSSBI):
- .1 CSSBI 20M-99, Standard for Sheet Steel Cladding for Architectural, Industrial and Commercial Building Applications

.3 Health Canada/Workplace Hazardous Materials Information System (WHMIS)
- .1 Safety Data Sheets (SDS).

1.3 DESIGN REQUIREMENTS

.1 Design roofing system to the applicable requirements of: CSA-S136.

.2 Design roof system to resist
- .1 Snow loads and snow build-up, and rain load, expected in this geographical region.
- .2 Wind loads, positive and negative, expected in this geographical region.
- .3 Wind uplift and sliding forces induced by environmental loads.
- .4 Dead load of roof system.
- .5 Deflection of the roof system is not to exceed L/240 of the span for the specified live loading.
- .6 Thermal Movements: Allow for thermal movements from ambient and surface temperature changes by preventing buckling, overstressing of components, failure of connections, and other detrimental effects. Base calculations on surface temperatures of materials due to both solar heat gain and nighttime sky heat loss.
- .7 Temperature Change (Range): 20 deg C, ambient; 40 deg C, material surfaces.

.3 Design metal roofing system to resist effects of earthquake motions under seismic design conditions for Post Disaster buildings as specified in the Contract Documents and specifically on drawing S000 item D01-3 SEISMIC SYSTEM/LOADING DATA. Provide components as necessary to implement the design.

1.4 ACTION AND INFORMATIONAL SUBMITTALS

.1 Submit in accordance with Section 01 33 00 - Submittal Procedures.

.2 Product Data:
- .1 Submit manufacturer's instructions, printed product literature and data sheets for sheet metal roofing and include product characteristics, performance criteria, physical size, finish and limitations.
- .2 Submit 2 copies of WHMIS SDS.

.3 Shop Drawings:
- .1 Submit drawings stamped and signed by professional engineer registered or licensed in ProvinceTerritory, Canada.

.4 Samples:
- .1 Submit 300 x 300 mm samples of each sheet metal material.

.5 evaluation indicating comparable standards to those specified.

1.5 QUALITY ASSURANCE

.1 Manufacturer of roof system, and installer shall demonstrate at least five years experience in projects similar in scope.

.2 This section establishes the standard of quality required for the complete metal roof system. Proposed substitutions must meet this standard, and will be considered as follows:
- .1 Substitutions may be requested in accordance with Section 01 25 00 “Substitution Procedures”.

1.6 DELIVERY, STORAGE AND HANDLING

.1 Deliver, store and handle materials in accordance with Section 01 61 00 - Common Product Requirementsandwith manufacturer's written instructions.

.2 Delivery and Acceptance Requirements: deliver materials to site in original factory packaging, labelled with manufacturer's name and address.

.3 Storage and Handling Requirements:
- .1 Store materials off ground in dry location and in accordance with manufacturer's recommendations in clean, dry, well-ventilated area.
- .2 Store and protect sheet metal roofing from nicks, scratches, and blemishes.
- .3 Replace defective or damaged materials with new.

.4 Packaging Waste Management: remove for reuse and returnby manufacturer of pallets,crates,padding,andpackaging materials as specified in Waste Reduction Workplan in accordance with Section 01 74 19 - Waste Management and Disposal.

1.7 WARRANTY

.1 Warrant the work in accordance with CRCA recommendations covering material leaks and installation workmanship.

.2 Provide a manufacturer’s written warranty: Furnish panel manufacturer’s written warranty covering failure of factory-applied exterior finish within the warranty period. Warranty period for finish: 20 years after the date of Substantial Completion

PART 2 PRODUCTS

2.1 METAL ROOF COMPONENTS:

.1 Steel Roof Deck: in accordance with Section 05 31 00 “Steel Deck”.

.2 Vapour Barrier Support Panels.
- .1 Fibre-reinforced gypsum roof board to CAN/ULC S102 and ASTM D3273, 1219 mm wide x 2438 mm long x 13 mm thick, ends and edges square.
- .2 Acceptable Product: SECUROCK GYPSUM-FIBRE ROOF BOARD by CGC.
- .3 Fasteners: Size and type in accordance with FM requirements and the membrane manufacturer’s recommendations.

.3 Air/Vapour Barrier: Sheet Seal Type 1, in accordance with Section 07 27 00.

.4 Insulation: Semi-rigid wall and roof insulation in accordance with Section 07 21 00 “Building Insulation”.

.5 Clip and Subgirt System:
- .1 TSR Clips: Purpose-made, sliding clip designed to accommodate expansion and contraction of the roof sheet. Made from galvanized material, thickness to suit design parameters.
- .2 Continuous hat bar and zee clips made from galvanized material, thickness to suit design parameters, and to accommodate depth of insulation.
- .3 Roof Fasteners: As specified by manufacturer, to resist wind uplift and sliding snow forces.

.6 Prefinished Standing Seam Metal Roofing Panels, exposed to exterior:
- .1 Panel: Z275 galvanized (zinc coated) sheet steel conforming to ASTM A653M structural quality Grade 230 or 340.
- .2 Profile: Seamed joint at 610 mm with seams at a minimum of 50 mm above the bottom of the ribbed profile.
- .3 Finish coating: factory precoated with modified silicone paint finish, 2 coat system dry paint film thickness of 0.025 mm.
- .4 Colour: Regent Grey (56082).
- .5 Standard of acceptance: TSR by Vic West

2.2 ACCESSORIES

.1 Flashing: In accordance with Section 07 62 00. Formed from same materials as the roof sheet. Custom fabricated to suit architectural details, as required.

.2 Closures: Foam and metal closures to suit profiles selected, to manufacturer's recommendations.

.3 Sealant: Asbestos-free sealant, compatible with systems materials, recommended by system manufacturer.

.4 Touch-up paint: as recommended by sheet metal roofing manufacturer.

.5 Gutters and Downspouts:
- .1 Material:
  - .1 Aluminum
  - .2 Thickness: 0.040
  - .3 Colour: to match adjacent flashing
- .2 Size:
  - .1 Gutter:
    - .1 Depth: 152mm

.2 Width: 152mm
.2 Downspout:
.1 Depth: 100mm
.2 Width: 125mm
.3 Fabrication:
.1 Box Gutter with Hangers: All joints including meter joints shall be pop riveted the entire length of the joint.

.4 Installation:
.1 Install as per the latest SMACNA architectural Sheet Metal Manual.
.2 Gutter:
.1 Support all gutters at 762mm o.c. with 25mm wide x 4.7mm thick stainless steel or aluminum hangers and fasteners. Provide expansion joints maximum 12m o.c.
.2 Gutters shall slope to the downspout and are not to hold water.
.3 Downspout:
.1 Maximum spacing between downspouts is 15m.
.2 Downspout supports – provide 25mm X 3mm aluminum straps as needed.
.5 Downspouts shall not be placed in front of door openings or windows. Extenders at base of downspout must be installed at any locations where water must be directed away from building.

.6 Vent Pipe Penetration Seals
.1 Basis of Design: Dektite Original by DEKS
.1 Size: to suit vent pipe
.2 Colour: Grey EPDM

2.3 FABRICATION

.1 Fabricate roof components to comply with dimensions, profiles, gauges and details as shown on the shop drawings, including fascia and soffit panels and all companion flashing.

.2 Fabricate all components of the system in the factory, ready for field installation.

.3 Provide roof sheet and all accessories in longest practicable length to minimize field lapping of joints.

PART 3 EXECUTION

3.1 EXAMINATION

.1 Verification of Conditions: verify that conditions of substrate previously installed under other Sections or Contracts are acceptable for sheet metal roofing installation in accordance with manufacturer's written instructions.
.1 Visually inspect substrate in presence of Consultant.
.2 Inform Consultant of unacceptable conditions immediately upon discovery.
.3 Proceed with installation only after unacceptable conditions have been remedied and after receipt of written approval to proceed from Consultant.

3.2 INSTALLATION

.1 Thermal & Moisture Protection:
.1 Steel Deck: Install Steel Deck in accordance with Section 05 31 00 Steel Deck. Ensure installation is complete before starting roof work.

.2 Vapour Barrier Support: Install exterior grade gypsum board perpendicular to flutes of Steel Deck.

Fasten using manufacturer's recommended fasteners, with spacing to suit wind loading conditions.

.3 Air/Vapour Barrier: Install membrane Air/Vapour Barrier in accordance with Section 07 27 00 and to manufacturer's recommendations. Ensure all joints are properly lapped, sealed and tied in with wall air/vapour barriers to ensure airtight construction. Provide a continuous seal at all openings in the roof system.

.4 Support Clips: Attach TSR Clips, hat bar, and zee clips using fasteners as recommended by the manufacturer, to suit the substrate.

.5 Insulation: Install Insulation in two layers, and as shown on the drawings. Tightly butt against support clips. Insulation should be continuous.

.6 Roof Panel Installation
- .1 Install exterior prefinished roof panels on panel support clips, using manufacturer's proper construction procedure. Ensure batten is positively locked for full length of roof. Close interlocking side joints by using a purpose-made seaming machine, as supplied by the manufacturer.
- .2 Where indicated on approved shop drawings, secure the end-lap of metal roofing sheets in accordance with the manufacturers specifications and details to provide a weather-tight seal. Exposed fasteners to match colour of the roof sheet.
- .3 Provide notched and formed closures, sealed against weather penetration, at changes in pitch, and at ridges and eaves, where required.
- .4 Install all companion flashing {gutters}, {ventilators} as shown on the shop drawings. Use concealed fasteners when possible. Exposed fasteners to match colour of roof sheet.

3.3 CLEANING

.1 Progress Cleaning: clean in accordance with Section 01 74 11 - Cleaning.
- .1 Leave Work area clean at end of each day.

.2 Final Cleaning: upon completion remove surplus materials, rubbish, tools and equipment in accordance with Section 01 74 11 - Cleaning.

.3 Waste Management: separate waste materials for reuseandrecycling in accordance with Section 01 74 19 - Waste Management and Disposal.
- .1 Remove recycling containers and bins from site and dispose of materials at appropriate facility.

3.4 PROTECTION

.1 Protect installed products and components from damage during construction.

.2 Repair damage to adjacent materials caused by sheet metal roofing installation.

END OF SECTION

PART 1 GENERAL

1.1 SUMMARY OF WORK

.1 Work Included:
- .1 The work of this Section includes the provision of all labour, materials, equipment and services required to fabricate and install sheet metal flashing and trim, as indicated on the drawings, as specified herein and as required for a complete project.
- .2 The work includes repairs and alterations to existing metal flashing and the installation of new metal flashing.

1.2 REFERENCES

.1 American Society for Testing and Materials (ASTM):
- .1 ASTM A653/A653M-09a, Standard Specification for Steel Sheet, Zinc-Coated (Galvanized) or Zinc-Iron Alloy Coated (Galvannealed) by the Hot-Dip Process.

.2 Canadian Standards Association (CSA):
- .1 CSA-B111-1974 Wire Nails, Spikes and Staples.

.3 The Society for Protective Coatings (SSPC):
- .1 SSPC-Paint 12 1982, Paint Specification No. 12: Cold Applied Asphalt Mastic (Extra Thick Film).

1.3 ACTION AND INFORMATIONAL SUBMITTALS

.1 Provide submittals in accordance with section 01 33 00.

.2 Product Data:
- .1 Submit manufacturer’s printed product literature for sheet metal flashing systems materials, specifications and datasheet and include product characteristics, performance criteria, physical size, finish and limitations.
- .2 Submit two copies of WHMIS MSDS - Material Safety Data Sheets in accordance with Section 01 35 29.06 - Health and Safety Requirements.
- .3 Submit certificates signed by manufacturer certifying that materials comply with specified performance characteristics and physical properties.
- .4 Submit manufacturer’s instructions.

.3 Samples:
- .1 Submit full range colour sample chips to indicate where colour availability is restricted.
- .2 Submit 50x50mm samples of each type of sheet metal material, finishes and colours.
- .3 Retain reviewed samples on-site to demonstrate acceptable standard of quality for appropriate on-site surface.

1.4 DELIVERY, STORAGE AND HANDLING

.1 Deliver, store and protect material in accordance with manufacturer’s recommendations.

1.5 WASTE MANAGEMENT AND DISPOSAL

.1 Separate and recycle waste materials, including packaging materials, in accordance with Section 01 74 19 "Waste Management and Disposal".

PART 2 PRODUCTS

2.1 MATERIALS

.1 Galvanized sheet steel to ASTM A653M, Grade 230, Z275 coating, pre-painted 10,000 Series Kynar. 0.76 mm (22 ga) minimum base metal thickness.
  .1 Colours: To match adjacent siding.

.2 Sealant: Refer to Section 07 92 00 “Joint Sealants”.

.3 Fasteners: Stainless steel, to CSA B111, type as recommended by installer for each specified application.

.4 Tape: isobutyl, 3x25mm.

.5 Washers: Stainless steel, 1mm thick with rubber packings.

2.2 FABRICATION

.1 Fabricate metal flashings and other sheet metal work as indicated and as required for a complete installation.

.2 Form pieces in 2400mm maximum lengths. Make allowance for expansion at joints.

.3 Hem exposed edges on underside 12mm. Mitre and seal corners with sealant.

.4 Form sections square, true and accurate to size, free from distortion and other defects detrimental to appearance or performance.

2.3 METAL FLASHING

.1 Form flashings, copings and parapet fascia’s to profiles indicated on prefinished metal sheet.

PART 3 EXECUTION

3.1 INSTALLATION

.1 Install sheet metal work to CRCA specifications except where otherwise detailed.

.2 Use concealed fastenings throughout.

.3 Lock end joints and caulk with sealant.

.4 Joints, seams and edges shall be formed, folded, locked and well caulked. Raw edges shall be turned under to conceal them.

.5 Provision shall be made for expansion and contraction and all work shall be executed using concealed fasteners.

3.2 CLEANING

.1 Upon completion of the installation, remove from the premises all surplus materials, dirt and debris caused by the work of this Section and leave the installation clean.

.2 Clean and drippage and spills of surplus sealant or plastic cement from adjacent surfaces and make good any damage caused by the work.

END OF SECTION

PART 1 PART 1 - GENERAL

1.1 SUMMARY

.1 Section Includes:
- .1 Snow guards for metal roofs.
- .2 Non-penetrating attachment system.

1.2 RELATED SECTIONS

.1 Section 07 61 00 - Sheet Metal Roofing

.2 Section 07 62 00 – Sheet Metal Flashing and Trim

1.3 REFERENCES

.1 Aluminum Association (AA) - Aluminum Standards and Data, 2003 Edition.

.2 ASTM International (ASTM):
- .1 B85-03 - Standard Specification for Aluminum-Alloy Die Castings.
- .2 B221-04a - Standard Specification for Aluminum and Aluminum-Alloy Extruded Bars, Rods, Wire, Profiles, and Tubes.

1.4 SUBMITTALS

.1 Action Submittal:
- .1 Shop Drawings: Include roof plans showing locations of snow guards on roof and attachment details and spacing.
- .2 Product Data:
  - .1 Product description.
  - .2 Construction details.
  - .3 Material descriptions.
  - .4 Individual component dimensions.
  - .5 Finishes.
  - .6 Installation instructions.
- .3 Samples:
  - .1 Clamp samples.
  - .2 12-inch long cross member samples including all associated hardware.

.2 Informational Submittals:
- .1 Include calculation of number and location of snow guards based on designed roof snow load, roof slope, roof type, components, spacings and finish
- .2 Test results: Results of product tensile load testing, issued by a recognized independent testing laboratory, showing ultimate load-to-failure value of attachment.

.3 Closeout Submittals:
- .1 Certification: Installer's certification that snow guard system was installed in accordance with manufacturer's instructions and approved Shop Drawings.

1.5 QUALITY ASSURANCE

.1 Manufacturer Qualifications: Manufacturer to specialize in production of Snow Guard Products of the type specified with a minimum of 20 years documented experience.

.2 Installer Qualifications: Installer to specialize in metal roof installation and installation of Snow Guard Products with a minimum of 5 years documented experience.

.3 Mockup:
- .1 Size: Minimum 2440m long.
- .2 Show: Snow guard attachment, cross members, and accessories.
- .3 Locate where directed.
- .4 Approved mockup may remain as part of the Work.

1.6 DELIVERY, STORGE AND HANDLING

.1 Deliver components to jobsite properly packaged to provide protection during transport, delivery and handling.

.2 Store products in manufacturer's original labeled and unopened packaging in a clean and dry location, protected from potential damage, until ready for application.

PART 2 PRODUCTS

2.1 SYSTEM DESCRIPTION

.1 Attachment system to provide attachment to standing seam metal roofs:
- .1 With only minor dimpling of panel seams.
- .2 Without penetrations through roof seams or panels.
- .3 Without use of sealers or adhesives.
- .4 Without voiding roof warranty.

.2 Performance Requirements: Provide snow guards to withstand exposure to the weather and environmental elements, and resist design forces without failure due to defective manufacture.
- .1 Loading: Design snow guard system to resist minimum in-service vector load per linear foot of eave.
- .2 Factor of safety: Utilize a factor of safety ≥ 2 to determine allowable loads from ultimate tested clamp tensile load values.
- .3 Source Limitation: Provide snow guard system as designed and tested by the manufacturer as a complete system. Install components by the same manufacturer.

2.2 PIPE-TYPE SNOW RETENTION SYSTEMS FOR STANDING SEAM METAL ROOFS

.1 Code: RSG-01.

.2 Basis of Design: X-Gard 2.0, manufactured by S-5! Metal Roof Innovations, Ltd.

.3 Components:
- .1 Clamps:
  - .1 Manufactured from 6061-T6 aluminum extrusions conforming to ASTM B221 or aluminum castings conforming to ASTM B85 and to AA Aluminum Standards and Data.
    - .1 Model: to suit application.

.2 Set screws: 300 Series stainless steel, 18-8 alloy, 3/8 inch diameter, with round nose point.
.3 Attachment bolts: 300 Series stainless steel, 18-8 alloy, 10 mm diameter, hex flange bolt.

.2 Pipe Brackets:
.1 Manufactured from 6061-T6 or 6005-T5 alloy and temper aluminum extrusions conforming to ASTM B221 and AA Aluminum Standards and Data or cast aluminum.
.1 Model: X-Gard Bracket 2.0 for double cross member

.3 Cross Members:
.1 Manufactured from 6061-T6 or 6005-T5 alloy and temper aluminum extrusions conforming to ASTM B221 and AA Aluminum Standards and Data.
.1 Optional 1.9” Round Pipe
.2 Provide Splice connectors ensuring alignment and structural continuity at end joints.

.4 Ice and Snow Clips:
.1 Aluminum, minimum 3 inches wide.
.1 Height of Clip to suit standing seam height.

2.3 VENT PIPE SNOW GUARD SYSTEM

.1 Basis of Design: VentSaver P-383, manufactured by SnoBlox-Snojax.
.1 Material:
.1 Non-corrosive powder coated aircraft grade aluminum
.2 Pre-punched stainless-steel strap or cable
.3 Stainless steel nuts, bolts and heavy duty 38mm lag screw

.2 Finish:
.1 Powder Coated Light Grey

PART 3 EXECUTION

3.1 EXAMINATION

.1 Prior to beginning installation, verify that:
.1 Panel seaming is complete.
.2 Panel attachment is sufficient to withstand loads applied by snow guard system.
.3 Installation will not impeded roof drainage.

3.2 PREPARATION

.1 Clean areas to receive attachments; remove loose and foreign matter that could interfere withinstallation or performance.

3.3 INSTALLATION

.1 Install system in accordance with manufacturer's instructions and approved Shop Drawings.

.2 Snow Retention System:
.1 Place clamps at maximum 48 inches on center or as required by in-service loads.
.2 Place clamps in straight, aligned rows.
.3 Place both set screws on same side of clamp.
.4 Tighten set screws to manufacturer's recommended torque. Randomly test set screw torque using calibrated torque wrench.
.5 Slide cross member thru X-Gard 2.0.
.6 Attach X-Gard 2.0 and cross members to clamps; tighten bolts to manufacturer's recommended torque.
.7 Install splice connectors at cross member end joints.

.8 Do not cantilever cross members more than 4 inches beyond last clamp at ends.
.9 Install Ice and Snow Clips, number of clips as per manufactures recommended standard per panel between panel seams.
.10 Secure Ice and Snow Clip to pipe using 12-14 x 7/8 inch stainless steel self-drilling screw (provided)

.3 Vent Pipe Snow Guard System
.1 Mechanical Fastening Installation
.1 Attach fin and base angle. (Base angel is reversible to accommodate rib construction.)
.2 Apply a long life all weather silicone, compatible with panel finish, covering the entire base.
.3 Place Vent Pipe Snow Guard in position centered uphill behind pipe and fasten with four 38mm lag screws through metal roof sheet into an adequate wood structural support.
.4 Strap Installation:
.1 Attach stainless strap around pipe and fasten to fin using 19mm" #14 bolt through strap end. Trim excess strap.
.5 Check all fasteners for tightness.

END OF SECTION

PART 1 GENERAL

1.1 RELATED DOCUMENTS

.1 Drawings and general provisions of the Contract, including General and Supplementary Conditions and Division 1 Specification Sections, and all documents referenced herein, apply to this Section.

1.2 SUMMARY OF WORK

.1 Work Included:
- .1 The work of this Section includes the engineering design, layout, supply and installation of a horizontal cable type fall arrest system for the roof of the building.
- .2 The work includes all components of a complete horizontal cable tie-back and lifeline anchor installation which is required to be permanently attached to the building. Portable equipment is not included in this Contract.

.2 Related Work:
- .1 Section 03 33 00 - Cast-in-Place Concrete.
- .2 Section 05 12 00 - Structural Steel.
- .3 Section 07 52 00 - SBS Modified Bituminous Roofing.

1.3 REFERENCES

.1 American Society for Testing and Materials (ASTM):
- .1 ASTM A123/A123M-02, Standard Specification for Zinc (Hot-Dip Galvanized) Coatings on Iron and Steel Products.
- .2 ASTM A143/A143M-07, Standard Practice for Safeguarding Against Embrittlement of Hot-Dip Galvanized Structural Steel Products and Procedure for Detecting Embrittlement
- .3 ASTM A167-99(2004) Standard Specification for Stainless and Heat-Resisting Chromium-Nickel Steel Plate, Sheet, and Strip
- .4 ASTM A269-08, Standard Specification for Seamless and Welded Austenitic Stainless Steel Tubing for General Service
- .5 ASTM A276-08a, Standard Specification for Stainless Steel Bars and Shapes
- .6 ASTM B221-08, Standard Specification for Aluminum and Aluminum-Alloy Extruded Bars, Rods, Wire, Profiles and Tubes.

.2 Canadian Standards Association (CSA):
- .1 CSA G40.21-04/G40.21-04, General Requirements for Rolled or Welded Structural Quality Steel/Structural Quality Steel.
- .2 CSA W59-03, Welded Steel Construction (Metal Arc Welding).
- .3 CSA W47.1-03, Certification of Companies for Fusion Welding of Steel.

.3 CAN/CSA-Z91-02, Health and Safety Code for Suspended Equipment Operations.

1.4 QUALIFICATIONS

.1 The work of this Section shall be executed by a company specializing in the design and installation of rooftop lifeline anchor systems of the type specified.

1.5 DESIGN AND REGULATORY REQUIREMENTS

.1 The information shown on the drawings is schematic and intended only to indicate the general design intent.

.2 It is the manufacturer's responsibility to engineer and design a complete horizontal cable fall protection system that provides for lifeline anchorage for horizontal movement over the entire area of the roof and for vertical movement for window cleaning, using a work cage or suspended platform.

.3 The installation shall allow for proper window washing practices and shall comply with CAN/CSA-Z91 and the requirements of authorities having jurisdiction.

.4 Comply with the Ontario Occupational Health & Safety Act Regulations for Window Cleaning, In the event of conflict, these regulations shall take precedence over CAN/CSA-Z91.

.5 Welding shall be done by a company certified for this work under CSA W47.1 and shall comply with CSA-W59.

1.6 INSURANCE

.1 The manufacturer shall provide specific product liability insurance for all aspects of the installation design and against failure of the safety anchors. Indemnify the Owner against all claims whatsoever arising from the design of or failure of any part of the work of this Section.

1.7 SUSTAINABILITY REQUIREMENTS

.1 Give preference to Products containing the highest percentage of recycled material content.

.2 Where possible, provide Products which are regionally manufactured and extracted.

.3 Comply with the requirements of Section 01 35 43 "Environmental Procedures".

.4 Cooperate with the Waste Management Coordinator in the implementation of the Waste Management Plan specified in Section 01 74 19 “Waste Management and Disposal". Handle and dispose of waste materials generated by the work of this Section in accordance with the Waste Management Plan.

1.8 SUBMITTALS

.1 General: Submit each item in this Article according to the Conditions of the Contract and the applicable Division 01 Specification Sections.

.2 Shop Drawings:
- .1 Clearly indicate design, fabrication details, plans, elevations, hardware and installation details.
- .2 The work of this Section, including all related connections and fastenings, shall be designed by a structural engineer licensed to practise in the Province of Ontario. Each shop drawing submitted shall bear the stamp and signature of the aforesaid structural engineer.
- .3 Shop drawings shall comply with the Occupational Health and Safety Act Requirements, including all necessary RESTRICTIVE AND NON-RESTRICTIVE working usage notes and General Safety Notes.

.3 Test Data: Submit test data from a testing laboratory. Anchors to be tested in 360o to absolute failure.

.4 Certification: Include a letter of compliance from a Structural Engineer, permanently licensed to practice in the Province of Ontario, certifying that the anchor meets the performance requirements of the Ministry of Labour.

.5 Logbook: Submit required safety inspection logbook for yearly inspections.

.6 As-built Drawings: Submit two copies of a reduced plastic laminated as-built drawing showing anchor locations and details, to be supplied to the Owner to post near roof entrances.

1.9 INSPECTION AND TESTING

.1 Field tests to verify compliance with applicable codes and regulations may, at the Owner's discretion, be conducted by an independent testing company appointed by the Owner.

.2 The cost of initial testing will be paid for by the Owner.

.3 The cost of reinspection and re-testing required as a result of failure to meet the specified requirements on the initial inspection/test shall be paid by the Contractor.

PART 2 PRODUCTS

2.1 MANUFACTURERS

.1 This specification is based on fall protection equipment by Pro-Bel Enterprises Ltd.

.2 Subject to compliance with specification requirements as verified by the Consultant's review specified in the next paragraph, an equivalent installation by Telco Industries Inc., (416) 749-2030 is acceptable alternatives.

.3 Requests for substitutions will be considered in accordance with provisions of Section 01 25 00 "Substitution Procedures". Acceptance of products by other manufacturers will be subject to review by the Consultant for conformity with the specifications and for equivalency of quality and performance to the specified products.

2.2 SYSTEM COMPONENTS

.1 Cable: 8 mm dia. stainless steel.

.2 Tether: Portable double lanyard with double snapping hooks.

.3 End terminal hardware: Stainless steel swaged termination at one end and stainless steel tensioner with shock absorber at the other end.

.4 Harness: Manufacturer's standard full body harness with shock absorber.

.5 End and intermediate anchors:
- .1 U-bar, anchor bolts: Type 304 stainless steel with a yield strength of 240 MPa. Standard of acceptance: Pro-Bel PBE or PB Series.
- .2 Hollow steel section (HSS) piers: Galvanized mild steel with a yield strength of 350 MPa. Steel piers to be filled with urethane foam insulation.
- .3 Plate and all other sections: Galvanized mild steel with a yield strength of 300 MPa.

.6 Seamless spun aluminum flashing for steel pier anchors: To ASTM B221, Type 6061-T6 alloy and temper with deck flange flashed in using modified bituminous membrane plies to the roofing manufacturer's instructions.

.7 Seal for top of anchor: Torch-applied heat-shrink rubber collar flashing.

.8 Miscellaneous bolts, nuts and washers: Type 304 stainless steel.

2.3 GALVANIZING

.1 Hot dip galvanizing to ASTM A123 and ASTM A143, minimum 600 g/m2 zinc coating weight.

PART 3 EXECUTION

3.1 EXAMINATION

.1 Examine job conditions before commencement of work.

.2 Commencement of work shall be construed as acceptance of the job conditions, and thereafter the Contractor shall be fully responsible for satisfactory work as required herein.

.3 Deficiencies in installed work due to acceptance of unsatisfactory conditions will be rectified at no cost to the Owner.

3.2 INSTALLATION

.1 Install horizontal cable fall protection system under the direction of a qualified Professional Structural Engineer, permanently licensed to practice in the Province of Ontario.

.2 Supply handling, instructions, anchorage information, roughing-in dimensions, templates and service requirements for installation or work of this Section, and assist or supervise, or both, the setting of anchorage devices and construction of other work incorporated with products specified in this Section.

.3 Install work to meet manufacturer's recommended specifications, true, tightly fitted and level or flush to adjacent surfaces as appropriate to the specific installation.

.4 include anchorage and mounting devices required for the installation of each product.

.5 After torquing, deform or pin the open thread in the stud of each safety anchor.

.6 Protect components where contact is made between dissimilar metals, to prevent electrolysis.

3.3 ADJUSTMENT AND FINAL INSPECTION

.1 Verify under work of this Section that installed products function properly and adjust them accordingly to ensure satisfactory operation.

.2 Complete inspection log book to certify the system for use.

END OF SECTION

PART 1 General

1.1 REFERENCES

.1 Health Canada/Workplace Hazardous Materials Information System (WHMIS)
  .1 Material Safety Data Sheets (MSDS).

.2 Underwriter's Laboratories of Canada (ULC)
  .1 ULC-S115, Fire Tests of Fire stop Systems.

1.2 DEFINITIONS

.1 Fire Stop Material: device intended to close off opening or penetration during fire or materials that fill openings in wall or floor assembly where penetration is by cables, cable trays, conduits, ducts and pipes and poke-through termination devices, including electrical outlet boxes along with their means of support through wall or floor openings.

.2 Single Component Fire Stop System: fire stop material that has Listed Systems Design and is used individually without use of high temperature insulation or other materials to create fire stop system.

.3 Multiple Component Fire Stop System: exact group of fire stop materials that are identified within Listed Systems Design to create on site fire stop system.

.4 Tightly Fitted; penetrating items that are cast in place in buildings of noncombustible construction or have "0" annular space in buildings of combustible construction.
  .1 Words "tightly fitted" should ensure that integrity of fire separation is such that it prevents passage of smoke and hot gases to unexposed side of fire separation.

1.3 ACTION AND INFORMATIONAL SUBMITTALS

.1 Provide submittals in accordance with Section 01 33 00.

.2 Product Data:
  .1 Submit manufacturer's printed product literature, specifications and datasheet and include product characteristics, performance criteria, physical size, finish and limitations.

.3 Shop Drawings:
  .1 Submit shop drawings to show location, proposed material, reinforcement, anchorage, fastenings and method of installation.
  .2 Construction details should accurately reflect actual job conditions.
  .3 Engineering Judgements to be stamped by an engineer licensed to practice in the Province on Ontario

.4 Samples:
  .1 Submit duplicate 300 x 300 mm samples showing actual fire stop material proposed for project.

.5 Quality assurance submittals: submit following in accordance with Section 01 45 00.
  .1 Test reports: in accordance with CAN-ULC-S101 for fire endurance and CAN-ULC-S102 for surface burning characteristics.
    .1 Submit certified test reports from approved independent testing laboratories, indicating compliance of applied fire stopping with specifications for specified performance characteristics and physical properties.

.2 Certificates: submit certificates signed by manufacturer certifying that materials comply with specified performance characteristics and physical properties.

1.4 QUALITY ASSURANCE

.1 Qualifications:
  .1 Installer: company specializing in fire stopping installations approved by manufacturer.

1.5 DELIVERY, STORAGE AND HANDLING

.1 Packing, shipping, handling and unloading:

.2 Deliver, store and handle materials in accordance with manufacturer's written instructions.

.3 Deliver materials to the site in undamaged condition and in original unopened containers, marked to indicate manufacturer &ULC markings.

.4 Storage and Protection:
  .1 Store materials indoors and in accordance with manufacturer's recommendations in clean, dry, well-ventilated area.
  .2 Replace defective or damaged materials with new.

PART 2 PRODUCTS

2.1 MATERIALS

.1 Replace defective or damaged materials with new.
  .1 Asbestos-free materials and systems capable of maintaining effective barrier against flame, smoke and gases in compliance with requirements of CAN- ULC-S115 and not to exceed opening sizes for which they are intended and conforming to specified special requirements described in PART 3.
  .2 Fire stop system rating as indicated.

.2 Service penetration assemblies: systems tested to CAN-ULC-S115.

.3 Service penetration fire stop components: certified by test laboratory to CAN-ULC-S115.

.4 Fire-resistance rating of installed fire stopping assembly in accordance with OBC.

.5 Fire stopping and smoke seals at openings intended for ease of re-entry such as cables: elastomeric seal.

.6 Fire stopping and smoke seals at openings around penetrations for pipes, ductwork and other mechanical items requiring sound and vibration control: elastomeric seal.

.7 Primers: to manufacturer's recommendation for specific material, substrate, and end use.

.8 Water (if applicable): potable, clean and free from injurious amounts of deleterious substances.

.9 Damming and backup materials, supports and anchoring devices: to manufacturer's recommendations, and in accordance with tested assembly being installed as acceptable to authorities having jurisdiction.

.10 Sealants for vertical joints: non-sagging.

.11 Refer to drawings sheet A090 for specific fire-stopping systems.

PART 3 EXECUTION

3.1 EXAMINATION MANUFACTURER'S INSTRUCTIONS

.1 Compliance: comply with manufacturer's written recommendations or specifications, including product technical bulletins, handling, storage and installation instructions, and datasheets.

3.2 PREPARATION

.1 Examine sizes and conditions of voids to be filled to establish correct thicknesses and installation of materials.
  .1 Ensure that substrates and surfaces are clean, dry and frost free.

.2 Prepare surfaces in contact with fire stopping materials and smoke seals to manufacturer's instructions.

.3 Maintain insulation around pipes and ducts penetrating fire separation without interruption to vapour barrier.

.4 Mask where necessary to avoid spillage and over coating onto adjoining surfaces; remove stains on adjacent surfaces.

3.3 INSTALLATION

.1 Install fire stopping and smoke seal material and components in accordance with manufacturer's certified tested system listing.

.2 Seal holes or voids made by through penetrations, poke-through termination devices, and unpenetrated openings or joints to ensure continuity and integrity of fire separation are maintained.

.3 Provide temporary forming as required and remove forming only after materials have gained sufficient strength and after initial curing.

.4 Tool or trowel exposed surfaces to neat finish.

.5 Remove excess compound promptly as work progresses and upon completion.

3.4 SEQUENCES OF OPERATION

.1 Proceed with installation only when submittals have been reviewed by Consultant.

.2 Install floor fire stopping before interior partition erections.

.3 Metal deck bonding: fire stopping to precede spray applied fireproofing to ensure required bonding

.4 Mechanical pipe insulation: certified fire stop system component.
  .1 Ensure pipe insulation installation precedes fire stopping.

3.5 FIELD QUALITY CONTROL

.1 Inspections: notify Consultant when ready for inspection and prior to concealing or enclosing fire stopping materials and service penetration assemblies.

3.6 CLEANING

.1 Proceed in accordance with Section 01 74 11.

.2 On completion and verification of performance of installation, remove surplus materials, excess materials, rubbish, tools and equipment.

.3 Remove temporary dams after initial set of fire stopping and smoke seal materials.

3.7 SCHEDULE

.1 Fire stop and smoke seal at:
- .1 Penetrations through fire-resistance rated masonry, concrete, and gypsum board partitions and walls.
- .2 Top of fire-resistance rated masonry and gypsum board partitions.
- .3 Intersection of fire-resistance rated masonry and gypsum board partitions.
- .4 Control and sway joints in fire-resistance rated masonry and gypsum board partitions and walls.
- .5 Openings and sleeves installed for future use through fire separations.
- .6 Around mechanical and electrical assemblies penetrating fire separations.
- .7 Rigid ducts: greater than 129 cm^2: fire stopping to consist of bead of fire stopping material between retaining angle and fire separation and between retaining angle and duct, on each side of fire separation.
- .8 Refer to drawings sheet A090 for specific fire-stopping systems.

END OF SECTION

PART 1 General

1.1 RELATED DOCUMENTS

.1 Drawings and general provisions of the Contract, including General and Supplementary Conditions and Division 1 Specification Sections apply to this Section.

1.2 SUMMARY OF WORK

.1 Work Included: The work of this Section includes the provision of all labour, materials, equipment and services required to execute sealant work, as indicated on the drawings, as specified herein and as required by job conditions and normally considered to be work covered by this Section.

.2 The term "sealant" shall be interpreted as synonymous with the term "caulking" where used on the drawings and/or in the specifications.

.3 Related Sections
- .1 Section 06 40 00 - Architectural Woodwork and Casework
- .2 Section 08 11 13 - Steel Doors and Frames
- .3 Section 08 41 13 – Aluminum-Framed Entrances and Storefronts.
- .4 Section 08 41 13 – Aluminum Windows
- .5 Section 09 21 16 - Gypsum Board Assemblies.
- .6 Section 09 30 13 - Ceramic Tile.
- .7 Section 12 36 16 – Metal Countertops

1.3 REFERENCES

.1 American Society for Testing and Materials (ASTM):
- .1 ASTM C834-14, Standard Specification for Latex Sealants.
- .2 ASTM C920-14a, Standard Specification for Elastomeric Joint Sealants.

.2 Health Canada / Workplace Hazardous Materials Information System (WHMIS):
- .1 Material Safety Data Sheets (MSDS).

1.4 QUALIFICATIONS

.1 The work of this Section shall be executed by an independent Trade Contractor whose primary business is in the application of caulking and sealants, using tradesmen skilled and trained in the techniques of caulking, and who are completely familiar with the published recommendations of the manufacturer of the caulking material being used.

.2 If requested by the Consultant, provide evidence of previously completed projects of a similar nature.

.3 Indication of lack of skill or defective work to be sufficient grounds for the Consultant to reject the installed caulking and to require its immediate removal and complete recaulking at no additional cost to the Owner during the warranty period.

.4 Cooperate with the Consultant and/or any inspection and testing agency.

1.5 COMPATIBILITY

.1 Sealants used for the various building interior assemblies shall be selected from those specified in the respective assembly Section, and shall be coordinated with the sealant being provided under other Sections. Preferably, one sealant of the same manufacturer shall be used throughout. If different sealants are selected, from those specified, it is the responsibility of the respective Section to ensure compatibility between selected sealant, substrates, and sealants of other Sections which come in contact with the selected sealant.

1.6 SUBMITTALS

.1 General: Submit each item in this Article according to the Conditions of the Contract and the applicable Division 01 Specification Sections.

.2 Prior to commencement of the work, submit, for each type of sealant, a certificate signed by the sealant manufacturer which states:
- .1 surface preparation requirements
- .2 priming and application procedures
- .3 verification that sealant materials are selected for use from those specified
- .4 verification that sealants are suitable for their locality, purposes intended and joint designs
- .5 verification that sealants are compatible with other materials and products with which they come in contact, including but not limited to sealants provided under other Sections, and finishes
- .6 verification that sealants will not stain the substrates or finished products
- .7 verification that sealant is suitable for temperature and humidity conditions at the time of application

.3 For each specified product, include manufacturer's material safety data sheets for the safe handling of the products, in accordance with WHMIS requirements.

1.7 ENVIRONMENTAL AND SAFETY REQUIREMENTS

.1 Comply with requirements of Workplace Hazardous Materials Information System (WHMIS) regarding use, handling, storage, and disposal of hazardous materials; and regarding labelling and provision of material safety data sheets acceptable to Labour Canada.

.2 Subject to compliance with other specification requirements, select low-odour, non-carcinogenic products in all locations for which such products are available.

.3 Conform to manufacturer's recommended temperatures, relative humidity, and substrate moisture content for application and curing of sealants including special conditions governing use.
- .1 Do not apply sealants when the temperature of the sealant and the materials to which it is applied is below 5°C.
- .2 Should it become necessary to apply sealants when the temperature is below 5oC, consult the sealant manufacturer and follow his recommendations.

1.8 DELIVERY, STORAGE, AND HANDLING

.1 Deliver and store materials in original wrappings and containers with manufacturer's seals and labels, intact.

.2 Store materials in strict accordance with the manufacturer's recommendations. Protect from freezing, moisture, water and contact with ground or floor.

1.9 WASTE MANAGEMENT AND DISPOSAL

.1 Separate and recycle waste materials, including packaging materials, in accordance with Section 01 74 21 "Construction Waste Management".

.2 Place materials defined as hazardous or toxic waste in designated containers.

.3 Ensure emptied containers are sealed and stored safely.

1.10 WARRANTY

.1 For the work of this Section, the 12-months warranty period prescribed in the General Conditions of the Contract is extended to 5 years.

.2 Warrant that caulking work will not leak, crack, crumble, melt, shrink, bubble, run, lose adhesion or stain adjacent surfaces.

PART 2 PRODUCTS

2.1 SEALANTS

.1 Sealant Types:

Application	Type	Description	Movement Capability	Standards	Acceptable Products
Around interior door, frames and windows, against drywall and where acoustical sealant exposed to sight is called for	A	Paintable, siliconized, acrylic latex sealant		ASTM C834	Tremflex 834 Paintable, Siliconized Acrylic Latex Sealant
Exterior joint work, interior and exterior masonry control joints and where extreme movement is anticipated	B	Ultra-low-modulus, one-part, neutral-cure silicone sealant for extreme movement joints.	+ 100% - 50%	ASTM C920, Type S, Grade NS, Class 100/50 Use T, NT, M, G, A, O	No primer reqd. on concrete. Non-staining, good unprimed adhesion to most substrates (Fluoropolymer coatings, polyethylene faced mod-bit. membrane etc.)
Exterior joint work where not otherwise specified or indicated.	C	One-part, neutral- cure silicone sealant	+ 50%	ASTM C920, Type S Grade NS, Class 50 Use NT, M, G, A	Manufacturer to recommend Type C or D for specific application Note that Type C has a limited colour range
	D	One-part, neutral- cure, medium modulus, architectural grade, silicone sealant	+ 50%	ASTM C920, Type S Grade NS, Class 50 Use NT, G, A, O	

Sealant for caulking countertops at wall, ceramic tile, plumbing fixtures, and in wet areas where not otherwise specified	B	One-part, acetoxy-cure, mildew- resistant, silicone sealant for non-porous substrates	± 25%		Dow Corning Tub, Tile & Ceramic Silicone Sealant
Acoustical Sealant in concealed locations	C	Flexible synthetic rubber acoustical sealant			Tremco Acoustical Sealant

.2 Colour of sealants: selected from the manufacturer's complete colour range to match adjacent materials, to the approval of the Consultant.

.3 Joint cleaner: xylol, methylethyleketon, IPA, or non-corrosive type recommended by sealant manufacturer and compatible with joint forming materials.

2.2 ACCESSORIES

.1 Primers: type recommended by sealant manufacturer for each specific application.

.2 Joint fillers: Chemically compatible with primers and sealants, outsized 30 to 50%, type recommended by sealant manufacturer for each specific application.

.3 Bond breaker: pressure sensitive plastic tape, which will not bond to sealants.

PART 3 Execution

3.1 EXAMINATION

.1 Examine areas and conditions under which work is to be performed and notify the Consultant in writing of conditions detrimental to the proper and timely completion of the work.

.2 For exterior sealants, arrange for a technical representative of the manufacturer to conduct adhesion tests for each joint condition and to make recommendations with respect to sealant type, primers (if required) and joint preparation. Do not deviate from the manufacturer's recommendations without prior written approval.

.3 Do not proceed with the work until unsatisfactory conditions have been corrected to the satisfaction of the installer.

.4 Commencement of the work of this Section will be construed as acceptance of the site conditions and, thereafter, the Contractor shall be fully responsible for satisfactory work as specified herein.

3.2 PREPARATION

.1 Remove dust, paint, loose mortar and other foreign matter. Dry joint surfaces.

.2 Remove rust, mill scale and coatings from ferrous metals by wire brush, grinding or sandblasting.

.3 Remove oil, grease and other coatings from non-ferrous metals with joint cleaner.

.4 Prepare concrete, masonry, glazed and vitreous surfaces to sealant manufacturer's instructions.

.5 Examine joint sizes and correct to achieve depth ratio 1/2 of joint width with minimum width and depth of 6 mm. Maximum width 75 mm.

.6 Install joint filler to achieve correct joint depth and shape with approximately 30% compression.

.7 Where necessary to prevent staining, mask adjacent surfaces prior to priming and caulking.

.8 Apply bond breaker tape where required to manufacturer's instructions.

.9 Use primers where recommended by the sealant manufacturer. Prime sides of joints to sealant manufacturer's instructions immediately prior to caulking.

3.3 WORKMANSHIP

.1 Caulk all joints between dissimilar materials.

.2 Before application of any sealant, confirm that sealant material is compatible with the materials and finishes of the surfaces to which the material is applied or is in contact with.

.3 Apply sealants in strict accordance with the manufacturer's printed directions for the specific applications of the particular materials used, using a gun with proper size nozzle. Use sufficient pressure to fill voids and joints solid. Superficial pointing with skin bead is not acceptable.

.4 Concrete or masonry joints shall be a minimum of 6 mm wide x 6 mm deep. Depth shall be equal to width in joints up to 12 mm wide. For joints 12 mm to 25 mm wide, depth shall be 12 mm.

.5 For joints in metal, glass and other non-porous surface, sealant depth shall be a minimum of 1/2 the applied sealant width, and shall in no case exceed the applied sealant width.

.6 Form surface of sealant with full bead, smooth, free from ridges, wrinkles, sags, air pockets, embedded impurities. Neatly tool surface to a slight concave joint.

.7 Cure sealants in accordance with manufacturer's instructions. Do not cover up sealant until curing is complete and proper seal has been achieved.

3.4 SEALANT APPLICATION

.1 Apply caulking around the perimeter of every wall and partition, both sides of openings in interior partitions; interior side of openings in exterior walls.

.2 Apply sealant to all exposed control joints in masonry, concrete, and gypsum board walls, ceilings, and bulkheads, joints between adjacent building components.

.3 Provide interior caulking in walls, floor finishes around all metal frames, door frames, access panels, built-in specialties; around pipes, ducts, grilles, outlet boxes, conduits, etc. penetrating floors, walls and ceiling.

.4 Apply siliconized acrylic latex caulking around wood trim and wipe smooth prior to painting.

.5 Caulk solidly around inside of all window/wall and door/wall joints, horizontal and vertical window and door surrounds, and all other trim, to provide a weathertight seal and prevent condensation.

.6 Caulk the connection between the tops of the concrete block walls and the underside of the steel deck, wherever exposed to sight.

.7 Caulk around plumbing fixtures, base and rim of sinks with mildew resistant sealant.

.8 Supply and install paintable sealant around all piping to sinks and lavatories where piping passes through walls.

3.5 PREFORMED FOAM SEALANT INSTALLATION

.1 Install preformed foam sealant in joints where indicated, in accordance with the manufacturer's printed instructions.

.2 Verify dimensions on site and take particular care to select the correct size preformed sealant for the joint.

.3 Install sealant to a clean line, flush with adjacent surfaces, and filling the joint, without interruption, for its entire length.

3.6 CLEANING

.1 Upon completion of the work of this Section remove from the premises all surplus material, dirt and debris caused by the work of this Section and leave the installation clean.

.2 Clean any drippage or spills of sealant or primers from adjacent surfaces immediately and make good any damage caused by the work of this Section, using cleaners recommended by the manufacturer, as work progresses.

END OF SECTION

PART 1 General

1.1 RELATED DOCUMENTS

.1 Drawings and general provisions of the Contract, including General and Supplementary Conditions and Division 1 Specification Sections, apply to this Section.

1.2 SUMMARY OF WORK

.1 Work Included: The work of this Section includes the provision of all labour, materials, equipment and services required to fabricate and install hollow steel doors and frames, as indicated on the drawings, as specified herein and as required for a complete project.

.2 Related Sections:
- .1 Section 07 92 00 - Joint Sealants.
- .2 Section 08 71 10 - Door Hardware.
- .3 Section 08 80 50 - Glazing.
- .4 Section 09 21 16 - Gypsum Board Assemblies.
- .5 Section 09 91 23 - Painting.

1.3 REFERENCES

.1 American Society for Testing and Materials (ASTM):
- .1 ASTM A568/A568M-15, Standard Specification for Steel Sheet, Carbon, and High-Strength, Low-Alloy, Hot-Rolled and Cold-Rolled, General Requirements for.

.2 Canadian Standards Association (CSA):
- .1 CSA-W59-13, Welded Steel Construction (Metal Arc Welding).

.3 Canadian Steel Door and Frame Manufacturers' Association (CSDFMA):
- .1 CSDFMA Specifications for Commercial Steel Doors and Frames.

.4 Door and Hardware Institute (DHI):
- .1 ANSI/DHI A115 IG-1994, Installation Guide for Doors and Hardware.

.5 Master Painters Institute (MPI):
- .1 MPI Architectural Specification Manual, 2010 (referred to herein as "MPI Manual")
- .2 MPI Approved Product List, (referred to herein as "MPI APL").

.6 National Fire Protection Association (NFPA):
- .1 NFPA 80-2010, Standard for Fire Doors and Other Opening Protectives.
- .2 NFPA 252-2012, Standard Methods of Fire Tests of Door Assemblies.

.7 Underwriters' Laboratories of Canada (ULC):
- .1 CAN/ULC-S104-10, Standard Method of Fire Tests of Door Assemblies.
- .2 CAN/ULC-S105-09, Standard Specification for Fire Door Frames Meeting the Performance Required by CAN/ULC-S104.

1.4 REQUIREMENTS OF REGULATORY AGENCIES

.1 Steel fire rated doors and frames: labelled and listed by an organization accredited by Standards

Council of Canada in conformance with CAN/ULC-S104 and CAN/ULC-S105 for ratings specified or indicated.

.2 The work of this Section shall conform to the requirements of the 0BC 2012, latest revision, NFPA 80, and all other applicable codes and regulations, to the satisfaction of the authorities having jurisdiction.

1.5 SUBMITTALS

.1 General: Submit each item in this Article according to the Conditions of the Contract and the applicable Division 01 Specification Sections.

.2 Shop Drawings:
- .1 Indicate each type of door, size, material, steel core thicknesses, mortises, reinforcements, location of exposed fasteners, glazed openings, arrangement of hardware and fire rating where applicable.
- .2 Indicate each type frame, elevation, profile, material, core thickness, reinforcements, glazing stops, location of anchors and exposed fastenings and finishes.
- .3 Include a schedule which identifies each unit, with door marks and numbers which clearly correspond to the room numbering system used on the architectural drawings.

1.6 DELIVERY, STORAGE AND HANDLING

.1 Protect products during fabrication, transportation, site storage and erection.

.2 Store products in strict accordance with the manufacturer's recommendations.

1.7 WARRANTY

.1 For the work of this Section, the 12-months warranty period prescribed in the General Conditions of the Contract is extended to 5 years.

1.8 WASTE MANAGEMENT AND DISPOSAL

.1 Separate and recycle waste materials, including packaging materials, in accordance with Section 01 74 19 " Waste Management and Disposal".

PART 2 Products

2.1 STEEL

.1 Steel: Commercial grade steel to ASTM A568/A568M, wipe coat galvanized steel, coating designation ZF001 (A01), minimum base steel thickness unless noted otherwise:
- .1 Frames: 1.6 mm (16 ga).
- .2 Door faces: 1.2 mm (18 ga).
- .3 Top and bottom end channels: 1.2 mm (18 ga).
- .4 Reinforcements:
  - .1 Lock and strike reinforcements: 1.6 mm (16 ga).
  - .2 Hinge reinforcements: 3.4 mm (10 ga).
  - .3 Flush bolt reinforcements: 1.6 mm (16 ga).
  - .4 Door closer and holder reinforcements: 2.7 mm (12 ga).
- .5 Performance
  - .1 Thermal Values: U-value max. of 0.45.

2.2 DOOR CORE MATERIALS

.1 Honeycomb construction (Interior Doors):
  .1 Structural small cell, 24.5 mm maximum kraft paper 'honeycomb', weight: 36.3 kg per ream minimum, density: 16.5 kg/m³ minimum sanded to required thickness.

.2 Stiffened (Exterior Doors): face sheets welded, un-insulated and insulated core as indicated:
  .1 Expanded polystyrene: CAN/ULC-S701, density 16 to 32 kg/m³.
  .2 Polyurethane: to CAN/ULC-S704 rigid, modified polyisocyanurate, closed cell board. Density 32 kg/m³.

2.3 ACCESSORIES

.1 Anchors: as required to suit each specific condition.

.2 Door silencers: Single stud rubber/neoprene type, 3 per door.

.3 Other components: Provide other door and frame components in accordance with CSDFMA requirements.

2.4 FABRICATION

.1 Fabricate doors and frames as detailed, to Canadian Steel Door and Frame Manufacturers' Association, (CSDFMA) Canadian Manufacturing Specifications for Steel Doors and Frames, except where specified otherwise. Reinforce door and frames to suit hardware requirements specified in Section 08 71 10 "Door Hardware".

.2 Blank, reinforce, drill and tap doors and frames for mortised hardware. Reinforce doors and frames for surface mounted hardware.

.3 Specified reinforcement is the minimum requirement. Provide additional reinforcement where required to ensure a permanent, rigid, trouble-free installation able to withstand the stresses of heavy usage.

.4 Cut, shear, straighten and work the steel in a manner which will prevent disfigurement of the finished work.

.5 Punch frames for rubber door bumpers.

.6 Fill seams and joints and weld depressions with epoxy metal filler, disk-sand to a smooth, flat, uniform, scratch-free surface, with all arrases sharp and true-to-line. Ream drilled and punched holes and remove all burrs.

.7 Finished work shall be free of warp, open seams, buckles, weld and grind marks and other surface defects detrimental to the production of a good paint finish.

.8 Conceal all fastenings except those required for loose glazing stops.

.9 Welding shall conform to CSA-W59.

2.5 FABRICATION OF DOORS

.1 Doors shall be swing-type, flush, with provision for glass and/or louvre openings as indicated.

.2 Exterior and interior doors and transom panels to be hollow steel construction.

.1 Faces: Form each face sheet for exterior and interior doors from a single steel sheet.

.3 Make provision for glazing as indicated and provide the following:
.1 Channel formed glazing stop, 16 mm high.
.2 Screw fixing with countersunk oval head sheet metal screws.

.4 Make cut-outs to receive louvres.

.5 Longitudinal edges shall be epoxy-filled and mechanically interlocked. Fill with metallic paste filler and sand to a uniform smooth finish.

.6 All exterior doors and also interior doors with electronic contacts shall have a top flush steel closure with edges welded and seam filled.

.7 Bevel the opening edge of the door to provide clearance for a tighter fit in frame.

.8 Provide reinforcement and drill holes in the locations and diameters required in accordance with hardware requirements and templates. Refer to Section 08 71 10 "Door Hardware".

.9 Provide fire labelled doors where indicated in the Door Schedule. Fire rated doors shall be tested in strict conformance with CAN/ULC-S104 or NFPA 252 and listed by an agency acceptable to the authorities having jurisdiction. Construct doors as detailed in Follow-Up Service Procedures/Factory Inspection Manuals issued by the listing agency to individual manufacturers.

.10 Attach ULC labels to doors where applicable.

.11 Touch up galvanized finish damaged during fabrication with zinc-rich primer and leave all surfaces ready to receive paint finish by Section 09 91 23.

2.6 FABRICATION OF FRAMES: GENERAL

.1 Frames to be manufactured by the same manufacturer as doors.

.2 Frames to be continuously welded construction. Spot welded or knockdown frames are not acceptable.

.3 Exterior frames shall be thermally broken with minimum 6 mm neoprene spacer mechanically interlocked with the inner and outer portions of the frames to form a single rigid assembly.

.4 Cut mitres and joints accurately and weld continuously on inside of profile. Accurately cope and securely weld butt joints of mullions, transom bars, centre rails and sills.

.5 Grind welded joints to a flat plane, fill with metallic paste filler and sand to uniform smooth finish.

.6 Conceal fastenings except where exposed fastenings are indicated.

.7 Blank, mortise, reinforce, drill and tap frames and reinforcements to receive hardware using templates provided by finish hardware supplier. Refer to Section 08 71 10 "Door Hardware.

.8 Protect mortise cutouts with steel guard boxes.

.9 Protect strike and hinge reinforcements using guard boxes welded to frames.

.10 Reinforce head of frames wider than 1200 mm (4'-0").

.11 Securely attach floor anchors to the inside of each jamb profile

.12 Weld in two temporary jamb spreaders per frame to maintain proper alignment during shipment.

.13 Provide for appropriate anchorage to floor and wall construction. Locate each wall anchor immediately above or below each hinge reinforcement on the hinge jamb and directly opposite on the strike jamb. For rebate opening heights up to and including 1520 mm, provide two anchors, and an additional anchor for each additional 760 mm of height or fraction thereof, except as indicated below.

.14 For frames in previously placed concrete, provide anchors located not more than 150 mm from the top and bottom of each jamb, and intermediate anchors at 660 mm on centre maximum.

.15 Provide single stud rubber door silencers. Install three on strike jamb for each single door and two at head for each pair of doors.

.16 Provide fire labelled frames where indicated in the Door Schedule. Fire rated frames shall be tested in strict conformance with CAN/ULC-S104 or NFPA 252 and listed by an agency acceptable to the authorities having jurisdiction. Construct frames as detailed in Follow-Up Service Procedures/ Factory Inspection Manuals issued by the listing agency to individual manufacturers.

.17 Attach ULC labels to frames, where applicable.

.18 When required due to site access or due to shipping limitations, frames for large openings may be fabricated in sections with splice joints for field assembly. Show the locations of field joints on the shop drawings and adhere to those locations.

.19 Touch up galvanized finish damaged during fabrication with zinc-rich primer to CAN/CGSB-1.181 and leave all surfaces ready to receive paint finish by Section 09 91 23.

.20 Shop-prime frames with cementitious primer to MPI APL #76 or #79, alkyd metal primer.

PART 3 Execution

3.1 INSTALLATION GENERAL

.1 Install doors, frames and hardware in accordance with ANSI/DHI A115 IG.

.2 Install labelled doors, frames and hardware in accordance with NFPA 80

3.2 FRAME INSTALLATION

.1 Set frames plumb, square, level and at correct elevation and secure anchorages and connections to adjacent construction.

.2 Brace frames rigidly in position while building-in. Install temporary horizontal wood spreader at third points of door opening to maintain frame width. Provide vertical support at centre of head for openings over 1200 mm wide. Remove temporary spreaders after frames are built-in.

.3 Make allowances for deflection of structure to ensure structural loads are not transmitted to frames.

.4 Grout exterior frames solid on the exterior side and fill on the interior side with insulation.

.5 Refer to Section 07 92 00 "Joint Sealants" for application of sealant around the exterior and interior perimeter of the frames.

.6 For glazing refer to Section 08 80 50 "Glazing".

3.3 DOOR INSTALLATION

.1 Install doors and hardware in accordance with hardware templates, manufacturer's instructions, ANSI/DHI A115 IG, and Section 08 71 10 "Door Hardware".

.2 Provide even margins between doors and jambs and doors and finished floor and thresholds as follows.
- .1 Hinge side: 1.0 mm.
- .2 Latchside and head: 1.5 mm.
- .3 Finished floor and thresholds:
  - .1 Generally: 13 mm.
  - .2 Doors identified as undercut: 25 mm.

.3 Adjust operable parts for smooth, correct function.

.4 For glazing refer to Section 08 80 50 "Glazing".

END OF SECTION

PART 1 GENERAL

1.1 RELATED SECTION

.1 Section 09 21 16 - Gypsum Board Assemblies.

.2 Section 09 30 13 - Ceramic Tiling.

.3 Section 21 05 01 – Common Work Results for Mechanical

.4 Section 26 05 00 – Common Work Results for Electrical

1.2 SHOP DRAWINGS

.1 Submit shop drawings in accordance with Section 01 33 00 - Submittal Procedures.

.2 Submit catalogue details for each type of door illustrating profiles, dimensions and methods of assembly.

1.3 SAMPLES

.1 Submit samples in accordance with Section 01 33 00 - Submittal Procedures.

.2 Submit one sample of each type of hand entry access door.

.3 Submit one 300 x 300 mm corner sample of each type of body entry door.

1.4 CLOSEOUT SUBMITTALS

.1 Provide maintenance data for cleaning and maintenance of stainless steel finishes for incorporation into manual specified in Section 01 78 00 - Closeout Submittals.

1.5 WASTE MANAGEMENT AND DISPOSAL

.1 Separate and recycle waste materials in accordance with Section 01 74 19 - Waste Management And Disposal, and with the Waste Reduction Workplan.

.2 Remove from site and dispose of all packaging materials at appropriate recycling facilities.

.3 Collect and separate for disposal; paper, plastic, polystyrene, corrugated cardboard packaging material in appropriate on-site bins for recycling in accordance with Waste Management Plan.

1.6 DELIVERY, STORAGE AND HANDLING

.1 Deliver, store and handle materials in accordance with Section 01 61 00 - Common Product Requirements.

.2 Leave protective covering on stainless steel access panels in place until final cleaning of building.

PART 2 PRODUCTS

2.1 ACCESS DOORS

.1 Access Doors are provided by the respective mechanical and electrical trades to Div. 8 for Div. 8 to install and Div. 9 to paint as applicable.

.2 Sizes: Except as indicated otherwise, to be minimum sizes as follows:
.1 For body entry: 600 x 600 mm.
.2 For hand entry: 300 x 300 mm.

.3 Construction: Rounded safety corners, concealed hinges, screwdriver latch, anchor straps, able to open 180°.

.4 Access doors in detention areas to have tamper proof security screws (not keyed locks)

.5 Materials
.1 Tiled or marble surfaces and other special areas: Stainless steel with brushed satin finish.
.2 Other areas: Prime coated steel for painting by Division 9.

.6 **Manufacturers:** Subject to compliance with requirements, available manufacturers offering products that may be incorporated into the Work include, but are not limited to, the following:
.1 Le Hage
.2 Zurn
.3 Accudor
.4 Maxam

2.2 EXCLUSIONS

.1 Lay-in tile ceilings: use unobtrusive identification locators.

PART 3 EXECUTION

3.1 LOCATION

.1 Provide access doors where required for access to balancing valves, valves, splitters, electrical access, disconnects, devices, cleanouts etc.

.2 Location: Ensure that equipment is within view and accessible for operating, inspecting, adjusting, servicing without using special tools.

END OF SECTION

PART 1 General

1.1 SECTION INCLUDES

.1 Insulated Sectional Overhead Doors.

.2 Glazed Aluminum Sectional Overhead Doors.

.3 Electric Operators and Controls.

.4 Operating Hardware, tracks, and support.

1.2 RELATED SECTIONS

.1 Section 05 50 00 - Metal Fabrications

.2 Section 07 90 00 - Joint Sealers

.3 Section 08 71 00 - Door Hardware

1.3 REFERENCES

.1 Aluminum Association (AA)
- .1 AA DAF 45-03, Designation System for Aluminum Finishes.

.2 American Architectural Manufacturers Association (AAMA)
- .1 AAMA 609/610-09, Cleaning and Maintenance Guide for Architecturally Finished Aluminum.

.3 ASTM International
- .1 ASTM A 167-99, Specification for Stainless and Heat-Resisting Chromium-Nickel Steel Plate, Sheet, and Strip.
- .1 ASTM A 123 - Zinc Coatings, Hot dipped galvanized.
- .2 ASTM A 216 - Specifications for sectional overhead type doors.
- .3 ASTM A 229 - Steel wire, oil tempered for mechanical springs.
- .4 ASTM A 276-08a, Standard Specification for Stainless Steel Bars and Shapes.
- .5 ASTM A 480/A 480M-10, Standard Specification for General Requirements for Flat Rolled Stainless Steel and Heat-Resisting Steel Plate, Sheet and Strip.
- .6 ASTM A-653-94 - Steel sheet, zinc coated by the hot-dipped process, commercial quality.
- .7 ASTM D 1929 - Ignition temperature test to determine flash and ignition temperature of foamed plastics.
- .8 ASTM E 84 - Tunnel test for flame spread and smoke developed index.
- .9 ASTM E 283 - Standard Test Method for Determining Rate of Air Leakage Through Exterior Windows, Curtain Walls, and Doors Under Specified Pressure Differences Across the Specimen
- .10 ASTM E 330 - Structural performance of exterior windows, curtain walls and doors by uniform static air pressure difference.
- .11 ASTM E 1332 - Standard Classification for Rating Outdoor-Indoor Sound Attenuation.

.4 Electrical and Electronic Manufacturers' Association of Canada (EEMAC)

.5 American National Standards Institute (ANSI)
- .1 ANSI/DASMA 102 - American National Standard Specifications for Sectional Overhead Type Doors.

1.2 DESIGN / PERFORMANCE REQUIREMENTS

.1 Wind Loads: Design and size components to withstand loads caused by pressure and suction of wind acting normal to plane of wall as calculated in accordance with Ontario Building Code 2012.

.2 Design Insulated Metal Sectional Doors to resist effects of earthquake motions under seismic design conditions for Post Disaster buildings as specified in the Contract Documents and specifically on drawing S000 item D01-3 SEISMIC SYSTEM/LOADING DATA. Provide components as necessary to implement the design.

1.3 SUBMITTALS

.1 Submit in accordance with Section 01 33 00 - Submittal Procedures.

.2 Product Data:
- .1 Submit manufacturer's instructions, printed product literature and data sheets for door components and grilles and include product characteristics, performance criteria, physical size, finish and limitations.

.3 Shop Drawings:
- .1 Submit shop drawings for consultant’s approval. Include elevations, sections, and details indicating dimensions, materials, finishes, conditions for anchorage and support of each door.
- .2 Submit drawings must be stamped and signed by professional engineer registered or licensed in Province of Ontario, including design and installation details to resist wind load and Seismic Restraint.
- .3 Indicate each type of door, arrangement of hardware, type of metal and finish for door sections, finish for miscellaneous components, and required clearances, electrical characteristics including voltage, size of motors, auxiliary controls and wiring diagrams.
- .4 Submit Manufacturer’s recommended operations, troubleshooting, and maintenance instructions.
- .1 Indicate assembly and operation details and dimensions of fabrication, required clearances and electrical connections.

.4 Samples:
- .1 Submit Manufacturer’s standard palette of colours for selection by Consultant.
- .2 Submit duplicate 300 mm long pieces for review and acceptance of each unit.

.5 Test Reports: certified test reports showing compliance with specified performance characteristics and physical properties.

1.4 QUALITY ASSURANCE

.1 Manufacturer Qualifications: Company specializing in manufacturing products specified in this section with minimum five years documented experience.

.2 Installer Qualifications: Authorized representative of the manufacturer with minimum five years documented experience.

.2 Products Requiring Electrical Connection: Listed and classified by Underwriters Laboratories, Inc. acceptable to authority having jurisdiction as suitable for purpose specified.

1.5 DELIVERY, STORAGE, AND HANDLING

.1 Deliver, store and handle materials in accordance with manufacturer's written instructions.

.2 Delivery and Acceptance Requirements: deliver materials to site in original factory packaging, labeled

with manufacturer's name and address.

.3 Storage and Handling Requirements:
- .1 Store materials indoors in dry location and in accordance with manufacturer's recommendations in clean, dry, well-ventilated area.

- .2 Store and protect overhead coiling doors from nicks, scratches, and blemishes.
  - .1 Replace defective or damaged materials with new.

1.6 WARRANTY

.1 Warranty: Manufacturer’s limited door and operators System warranty for 10 year against cracking, splitting or deterioration of steel skin due to rust-through.

PART 2 Products

2.1 MANUFACTURERS

.1 Basis of Design: Wayne Dalton Thermospan 200 insulated sectional overhead steel doors

2.2 INSULATED SECTIONAL OVERHEAD DOORS

.1 Insulated Steel Sectional Overhead Doors: Units shall have the following characteristics:
- .1 Door Sections: Shall be of steel/polyurethane/steel sandwich type construction with thermal break.
  - .1 Panel Thickness: 2 inches (51 mm).
  - .2 Exterior Surface: Flush non-repeating random stucco texture and 1/4 inch wide pin striping.
  - .3 Exterior Steel: min. .015 inch (0.38 mm), hot-dipped galvanized.
  - .4 Sections roll formed with two 1-3/4 inch integral struts sealed with polypropylene rib caps per section.
  - .5 Thermal Values: R-value min. R 18; U-value of 0.055.
  - .6 Insulation: CFC-free and HCFC-free polyurethane, fully encapsulated.
    1. Insulated sections tested in accordance with ASTM E 84 and achieve a Flame spread Index of 10 or less, and a Smoke Developed Index of 210 or less.
    2. Insulation material tested in accordance with ASTM D 1929 and achieve a minimum Flash Ignition temperature of 734 degrees F, and a minimum Self Ignition temperature of 950 degrees F.
    3. Insulated sections shall meet all requirements of the UBC 17-5 corner burn.
  - .7 Ends: Hot-dipped galvanized steel, full height with end caps.
  - .8 Spring Counterbalance: Sized to weight of the door, with a helically wound, oil tempered torsion spring mounted on a steel shaft; cable drum of die cast aluminum with high strength galvanized aircraft cable. Sized with a minimum 5 to 1 safety factor.
    1. High cycle spring: 60,000 cycles.
  - .9 Full View Aluminum Glazing Sections:
    1. 1/2 inch (12.5 mm) Double Insulating glass.

.2 Finish and Color:
- .1 Two coat baked-on polyester:
  - .1 Interior color, white.
  - .2 Exterior color, RLD 13480

.3 Wind load Design: Provide to meet the Design/Performance requirements specified.

.4 Hardware: Galvanized steel hinges and fixtures. Ball bearing rollers with hardened steel races.

.5 Lock:
- .1 Keyed lock with interlock switch for automatic operator.

.6 Weather-stripping:
- .1 Flexible bulb-type strip at bottom section.
- .2 Flexible Jamb seals.
- .3 Flexible Header seal.

.7 Track: Provide track as recommended by manufacturer to suit loading required and clearances available.
- .1 Size:
  - .1 3 inch (51 mm).
- .2 Type:
  - .1 High Lift.
  - .2 Vertical Lift.
- .3 Horizontal track shall be reinforced with continuous angle of adequate length and gauge to minimize deflection.
- .4 Vertical track shall be graduated to provide wedge type weathertight closing with continuous angle mounting for steel or wood jambs, and shall be fully adjustable to seal door at jambs.

.8 Heavy Industrial-Duty Gear-Reduced Operator: Gearhead Hoist Heavy Industrial-Duty Gear-Reduced Operator, continuous-duty high-starting torque motor with overload protection and emergency chain hoist with electric interlock. Basis-of-Design: Liftmaster Gearhead Hoist Operator.
- .1 Electric Operator: Industrial-duty assembly, cULus listed and cULus labeled, with electric motor and factory-prewired motor controls, wormgear reduction unit, electric solenoid-actuated brake, manually operated chain hoist, 3-button open/close/stop control station, conduit-encased wiring from control circuit to motor, and accessories required for proper operation; operator shall be capable of driving door at a speed of approximately 8 to 9 inches (203 to 229 mm) per second.
  - .1 Primary Speed Reduction Device: Wormgear-in-oil-bath gear reducer with synthetic “All Climate” oil with 43:1 to 45:1 speed reduction; permanently lubricated ball bearings on output shaft and output and door driven sprockets.
  - .2 Brake: Electric solenoid-actuated brake capable of stopping and holding a door at any position.
  - .3 Limit Switches: Fully adjustable, linear-driven limit mechanism synchronizing operator with door; low-friction nylon limit nuts fitted on threaded steel shaft that rotates on oil-tight self-lubricating bronze bushings; motor shall be removable without affecting limit switch settings.
  - .4 Electric Motor: High-starting torque, continuous-duty, industrial-type motor protected against overload by current sensing and thermal overload devices.
    - .1 Motor Specification:
      - .1 575V 60 Hz, 3-phase, 3/4 HP.
  - .5 Motor Control and Enclosure: motor control shall be UL- approved microprocessor solid-state type and shall include the capability to select one of 7 wiring types; additional features shall include a maintenance alert diagnostic system, programmable Timer-to-Close with timer defeat input, mid-stop programming capabilities and a maximum run timer to provide motor overrun protection; motor control shall be housed in a NEMA 1 enclosure integral to the operator and shall conform to ANSI/NEMA ICS 6.
    - .1 Radio Receiver: On-board, 3-channel receiver with standard external antenna; equipped to accept rolling code technology remote controls and trinary DIP switch remote controls, with memory up to (30) 3-button remote controls (or 90 single-button remote controls) plus 30 wireless keypads, or an unlimited number of trinary DIP switch remote controls. Tri-band frequency (310/315/390 MHz) sends

multiple radio signals to bypass radio interference.

.2 Internet Connectivity: Basis-of-Design: MyQ Technology
.1 902 to 928 MHz.
.2 50-channel FHSS (Frequency Hopping Spread Spectrum).

.3 Internet connectivity enables monitoring and control of door operators and lighting controls via Internet-enabled smartphone, tablet or computer.
.4 Provides two-way communication between commercial door operator and accessories to enable remote open, close and monitoring of commercial door.

.3 Contactor-Style (Mechanical) Motor Starter, Control and Enclosure: Motor starter shall be an across-the-line, mechanically interlocked, magnetic-reversing contactor; motor control shall be housed in a NEMA 1 enclosure integral to the operator; control enclosures shall conform to ANSI/NEMA ICS 6.

.6 3-Button Control Station: 3-button station providing open/close/stop functionality shall be NEMA Type 1 with maintenance alert indicator to signal intervals for routine door and operator maintenance.

.7 Door Drive: Operator shall be equipped with roller chain and sprockets as specified below, an electrically interlocked, floor level disconnect, a chain hoist for manual operation and an electric solenoid-actuated brake to stop motor and hold the door in any position:
.1 Roller Chain and Sprocket: 50B40 door sprocket and #50 drive chain, motor rated up to 1 HP.

.2 Primary Entrapment Protection Devices:
.1 NEMA 1 Monitored Photo Sensors: Monitored Photo Eyes fully monitored, non-contact, infrared beam photo sensor system shall reverse, in conjunction with the operator, a closing door to the full open position when an obstruction is sensed; photo sensors shall be mounted no higher than 6 inches (152 mm) maximum above the floor.
.1 Basis-of-Design: Liftmaster CPS-U.

.3 Ancillary Entrapment Protection Devices:
.1 Light Curtain: With a 915mm effective height and cross-beam pattern shall reverse a closing door to the full open position when an obstruction is sensed.
.1 Basis-of-Design: Liftmaster LC-36A
.2 Pneumatic Sensing Edge: Pneumatic (air hose) sensing edge shall reverse a closing door to the full open position when an obstruction is sensed.

.4 Accessories
.1 Open-Only Push Button: Mushroom Button Control Station
.2 Door-Position Indicator: Red/Green Traffic Light

.9 Operator Controls:
.1 Push-button operated control stations with open, close, and stop buttons.
.2 Surface mounting.
.3 Interior location.

.10 Special Operation:
.1 Radio control operation.
.2 Door timer operation.

PART 3 EXECUTION

3.1 EXAMINATION

.1 Do not begin installation until openings have been properly prepared.

.2 Verify wall openings are ready to receive work and opening dimensions and tolerances are within

specified limits.

.3 Verify electric power is available and of correct characteristics.

.4 If preparation is the responsibility of another installer, notify Architect of unsatisfactory preparation before proceeding.

3.2 PREPARATION

.1 Clean surfaces thoroughly prior to installation.

.2 Prepare surfaces using the methods recommended by the manufacturer for achieving the best result for the substrate under the project conditions.

3.3 INSTALLATION

.1 Install overhead doors and track in accordance with approved shop drawings and the manufacturer's printed instructions.

.2 Coordinate installation with adjacent work to ensure proper clearances and allow for maintenance.

.3 Anchor assembly to wall construction and building framing without distortion or stress.

.4 Securely brace door tracks suspended from structure. Secure tracks to structural members only.

.5 Fit and align door assembly including hardware.

.6 Coordinate installation of electrical service. Complete power and control wiring from disconnect to unit components.

3.4 ADJUSTING

.1 Test for proper operation and adjust as necessary to provide proper operation without binding or distortion

.2 Adjust hardware and operating assemblies for smooth and noiseless operation.

3.5 CLEANING

.1 Progress Cleaning: clean in accordance with Section 01 74 11 - Cleaning.
  .1 Leave Work area clean at end of each day.

.2 Final Cleaning: upon completion remove surplus materials, rubbish, tools and equipment in accordance with Section 01 74 11 - Cleaning.
  .1 Clean aluminum and stainless steel with damp rag and approved non-abrasive cleaner in accordance with manufacturer's instructions.
  .2 Remove traces of primer, caulking; clean doors and frames.
  .3 Clean doors, frames and glass using non-abrasive materials and methods recommended by manufacturer.
  .4 Remove labels and visible markings.
  .5 Touch-up, repair or replace damaged products before Substantial Completion.

3.6 PROTECTION

.1 Protect installed products and components from damage during construction.

.2 Repair damage to adjacent materials caused by overhead coiling door installation.

.3 Do not permit construction traffic through overhead door openings after adjustment and cleaning.

.4 Protect installed products until completion of project.

END OF SECTION

PART 1 GENERAL

1.1 RELATED SECTIONS:

.1 Section 07 21 19 - Urethane Foam Insulating Sealant.

.2 Section 07 27 00 - Air Barriers and Waterproofing.

.3 Section 07 92 00 - Joint Sealants.

.4 Section 08 71 10 - Door Hardware.

.5 Section 08 80 50 - Glazing.

1.2 REFERENCES

.1 Aluminum Association (AA):
- .1 AA-DAF-45-2003, Designation System for Aluminum Finishes.
- .2 AA Aluminum Standards and Data - 2006.

.2 American Architectural Manufacturers Association (AAMA):
- .1 AAMA 1503-98(R2004), Voluntary Test Method for Thermal Transmittance and Condensation Resistance of Windows, Doors and Glazed Wall Sections.

.3 American Society for Testing and Materials (ASTM):
- .1 ASTM E283-04, Standard Test Method for Determining Rate of Air Leakage Through Exterior Windows, Curtain Walls, and Doors Under Specified Pressure Differences Across the Specimen.
- .2 ASTM E330-02, Standard Test Method for Structural Performance of Exterior Windows, Curtain Walls, and Doors by Uniform Static Air Pressure Difference.
- .3 ASTM E331-00, Standard Test Method for Water Penetration of Exterior Windows, Skylights, Doors and Curtain Walls by Uniform Static Air Pressure Difference.

.4 Canadian Standards Association: (CSA):
- .1 CAN/CSA-G40.20-04, General Requirements for Rolled or Welded Structural Quality Steel.
- .2 CAN/CSA-G40.21-04, Structural Quality Steels.
- .3 CAN/CSA-G164-M92(R2003), Hot Dip Galvanizing of Irregularly Shaped Articles.
- .4 CAN3-S157/S157.1-05, Strength Design in Aluminum / Commentary on CSA Steel 157-05 Strength Design in Aluminum.

.5 The Society for Protective Coatings (SSPC):
- .1 SSPC-Paint 12 1982, Paint Specification No. 12: Cold Applied Asphalt Mastic (Extra Thick Film).

1.3 REGULATORY REQUIREMENTS

.1 The work of this Section shall conform to the requirements of the OBC 2015, latest revision, and all other applicable codes and regulations, to the satisfaction of the authorities having jurisdiction.

1.4 DESIGN CRITERIA AND PERFORMANCE

.1 Design frames and doors in exterior walls to accommodate expansion and contraction within an ambient temperature range of -35ºC to +35ºC.

.2 Structural performance shall be based on CAN3-S157 and a maximum deflection of 1/175 of the span.

.3 Design Aluminum Framed Entrances and Storefronts to resist effects of earthquake motions under seismic design conditions for Post Disaster buildings as specified in the Contract Documents and specifically on drawing S000 item D01-3 SEISMIC SYSTEM/LOADING DATA. Provide components as necessary to implement the design.

.4 Air infiltration for exterior doors and frames shall not exceed 2.78 m^3/h.m for a single door or 5.56 m^3/h.m for a pair of double doors, when tested in accordance with ASTM E283 at a pressure differential of 75 Pa.

.5 Thermally, the grid members of exterior frames shall have a condensation resistance equal to, or better than, the area along the bottom of a 25 mm sealed glass unit with standard metal spacer edge construction.

1.5 SUSTAINABILITY REQUIREMENTS

.1 Give preference to Products containing the highest percentage of recycled material content.

.2 Where possible, provide Products which are regionally manufactured and extracted.

.3 Comply with the requirements of Section 01 35 43 "Environmental Procedures".

.4 Cooperate with the Waste Management Coordinator in the implementation of the Waste Management Plan specified in Section 01 74 19 “Waste Management and Disposal". Handle and dispose of waste materials generated by the work of this Section in accordance with the Waste Management Plan.

1.6 SUBMITTALS

.1 General: Submit each item in this Article according to the Conditions of the Contract and the applicable Division 01 Specification Sections.

.2 Shop Drawings:
- .1 Indicate each type of door and frame, extrusion profiles, method of assembly, section and hardware reinforcement, locations of exposed fasteners, finishes and location of manufacturer's nameplates.
- .2 Submit catalogue details for each type of door and frame illustrating profiles, dimensions and methods of assembly.
- .3 Coordinate with other Sections and ensure that shop drawings are submitted early enough in the schedule to permit review prior to the work of any trade required to build in items for this Section. For example: inserts or weld plates, for anchorage, required to be built into cast-in-place concrete work.

.3 Maintenance Data: Provide maintenance data for cleaning and maintenance of aluminum finishes for incorporation into the manual specified in Section 01 78 00 “Closeout Submittals”.

1.7 PROTECTION

.1 Apply temporary protective coating to finished surfaces. Remove coating after erection. Do not use coatings that will become hard to remove or leave residue.

.2 Leave protective covering in place until final cleaning of building.

1.8 WARRANTY

.1 For the work of this Section, the 12-months warranty period prescribed in the General Conditions of the Contract, is extended to 5 years.

PART 2 PRODUCTS

2.1 GENERAL

.1 This specification is based on glazed aluminum doors and frames as manufactured by Alumicor.

.2 Requests for substitutions will be considered in accordance with provisions of Section 01 25 00 "Substitution Procedures". Acceptance of alternative products is subject to the approval of the Consultant.

2.2 MATERIALS

.1 Aluminum extrusions: Aluminum Association alloy AA6063-T5 anodizing quality.

.2 Sheet aluminum: Aluminum Association alloy AA1100-H14 anodizing quality.

.3 Steel reinforcement, fastening clips, etc.: to CAN/CSA-G40.21, hot dip galvanized to CAN/CSA G164.

.4 Fasteners: 300 Series stainless steel or 400 Series cadmium plated stainless steel of sufficient size and quantity to perform their intended function, finished to match adjacent material.

.5 Weatherstrip: replaceable mohair metal backed wool pile.

.6 Door bumpers: black neoprene.

.7 Threshold: Aluminum extrusion, 12.7 mm high x extended width to cover top of foundation wall x length to suit. Aluminum Association alloy AA6063-T5, mill finish. Provide cadmium plated steel fasteners as required.

.8 Door bottom seal: Adjustable door seal of anodized extruded aluminum frame and vinyl weather seal, recessed in door bottom, closed ends.

.9 Isolation coating: Alkali resistant bituminous paint to SSPC Paint-12 applied at rate of 1 l/m^2.

.10 Glass and glazing materials: Provided by this Section in accordance with Section 08 80 50 "Glazing".

.11 Sealants: Refer to Section 07 92 00 "Joint Sealants".

.12 Door hardware: Refer to Section 08 71 10 "Door Hardware".

2.3 GLAZED ALUMINUM DOORS

.1 Framed Aluminium doors:
- .1 Glazed doors:
  - .1 Exterior: Alumicor ThermaPorte 7700, Model T600A thermally broken.
  - .2 Interior: Alumicor Canadiana HD Model 800A.

.2 Construct doors of porthole extrusions with minimum wall thickness of 3 mm.

.3 Exterior Stile and rail dimensions, exclusive of glazing stops, to be as follows:
- .1 Door stiles nominal 146.1 mm wide.
- .2 Top rail nominal 142.9 mm wide.
- .3 Bottom rail nominal 177.8 mm wide.
- .4 Thickness: 57 mm.

.4 Interior Stile and rail dimensions, exclusive of glazing stops, to be as follows:
- .1 Door stiles nominal 101.6 mm wide.
- .2 Top rail nominal 115.9 mm wide.
- .3 Bottom rail nominal 203.2 mm wide.
- .4 Thickness: 45 mm.

.5 Performance Requirements:
- .1 Ensure system is designed to accommodate the following without damage to components or deterioration of seals:
  - .1 Thermal Resistance of:
    - .1 System U-Value: 0.35 maximum.

.6 Reinforce mechanically-joined corners of doors to produce sturdy door unit.

.7 Glazing stops: interlocking snap-in type for dry glazing.

.8 Exterior stops: tamperproof type.

2.4 ALUMINUM FRAMES: EXTERIOR

.1 Exterior aluminum frames: TriFab 451T Series, thermally broken and insulated, as follows:
- .1 Construct frames of aluminum extrusions with minimum wall thickness of 3 mm.
- .2 Assembled frame members to be 51 mm wide x 114 mm deep.

2.5 ALUMINUM FRAMES: INTERIOR

.1 Interior aluminum frames to be Tri-Fab 450 Series, flush glazed.
- .1 Frames shall be box-sections without thermal break, of aluminum extrusions with minimum wall thickness of 3 mm.
- .2 Frame members to be 51 mm wide x 114 mm deep.

2.6 FINISHES

.1 Finish aluminum surfaces with electrolytically deposited, clear anodic finish, designation AA-M12-C22-A41, Architectural Class I, in accordance with AA-DAF-45.

.2 Steel clips and reinforcement: 380 g/m^2 zinc coating to ASTM A123.

.3 Isolate aluminum from the following components by a heavy coating of bituminous coating:

.1 Dissimilar metals except stainless steel, zinc or white bronze in small area.
.2 Concrete, mortar and masonry.
.3 Wood.

2.7 FABRICATION

.1 Doors and framing to be by same manufacturer.

.2 Fabricate doors and frames to profiles and maximum face sizes as shown. Provide minimum 22 mm bite for insulating glazed units.

.3 Provide structural steel reinforcement as required.

.4 Fit joints tightly and secure mechanically.

.5 Conceal fastenings.

.6 Design anchorages so that they do not interfere with other work such as floor finishes of drywall finishes to walls.

.7 Mortise, reinforce, drill and tap doors, frames and reinforcements to receive hardware using templates provided by Section 08 71 10 "Door Hardware".

.8 Coordinate installation of hardware in the doors and frames to ensure proper operation of the completed installation.

.9 Isolate aluminum from direct contact with dissimilar metals, concrete and masonry.

PART 3 EXECUTION

3.1 EXAMINATION

.1 Examine areas and conditions under which work is to be performed and notify the Consultant in writing of conditions detrimental to the proper and timely completion of the work.

.2 Do not proceed with the work until unsatisfactory conditions have been corrected to the satisfaction of the installer.

.3 Take field measurements to verify or supplement dimensions.

.4 Commencement of the installation will be construed as acceptance of the site conditions and, thereafter, the Contractor shall be fully responsible for satisfactory work as specified herein.

3.2 INSTALLATION

.1 Set frames plumb, square, level at correct elevation in alignment with adjacent work.

.2 Anchor securely.

.3 Brace frames rigidly for building-in. Install temporary horizontal wood spreaders at third points of door opening to maintain frame width. Provide vertical support at centre of head for openings over 1200 mm wide. Remove temporary spreaders and supports after frames are built-in.

.4 Install doors and hardware in accordance with hardware templates and manufacturer's instructions.

.5 Adjust operable parts for correct function.

.6 Make allowances for deflection of structure to ensure that structural loads are not transmitted to frames.

3.3 GLAZING

.1 Glaze aluminum doors and frames in accordance with Section 08 80 50 "Glazing" and the manufacturer's standard glazing methods and materials.

3.4 AIR/VAPOUR SEAL

.1 Ensure airtight connections with adjacent construction to maintain the airseal over the entire building envelope.

.2 Coordinate with the building air/vapour barrier installer and install air/vapour barrier transition strips at the interface with adjacent construction. Refer to details.

.3 Inspect the entire assembly for gaps in the air seal and make good.

3.5 CAULKING

.1 Seal joints to provide weathertight seal at outside and air, vapour seal at inside.

.2 Apply sealant in accordance with Section 07 92 00 "Joint Sealants". Conceal sealant within the aluminum work except where exposed use is permitted by the Consultant. Colour of exposed sealant to match finish to the approval of the Consultant.

3.6 PROTECTION

.1 During and after installation, protect the work of this Section from damage. Remove all corrosive or foreign material or droppings resulting from the work of this or other trades.

.2 Do not use coatings that will become hard to remove or leave residue.

3.7 FINAL CLEANING

.1 Remove protective coating and clean all surfaces, using materials and methods recommended by the door and frame manufacturer.

.2

END OF SECTION

PART 1 GENERAL

1.1 RELATED SECTIONS

.1 Section 07 21 19 - Polyurethane Foam Insulating Sealant.
.2 Section 07 27 00 - Air Barriers and Waterproofing.
.3 Section 07 92 00 - Joint Sealants.
.4 Section 08 80 50 - Glazing.

1.2 REFERENCES

.1 Aluminum Association (AA):
.1 AA-DAF-45-2003, Designation System for Aluminum Finishes.

.2 Canadian Standards Association (CSA):
.1 CSA-A440-05, Windows.
.2 CSA-A440-00/A440.1-00, User Selection Guide to CSA-A440, Windows / Special Publication.
.3 CAN/CSA-G40.20-98, General Requirements for Rolled or Welded Structural Quality Steel.
.4 CSA-G40/G40.21-04, General Requirements for Rolled or Welded Structural Quality Steel / Structural Quality Steel.
.5 CAN3-S157/S157.1-05, Strength Design in Aluminum/ Commentary on CSA S157-05, Strength Design in Aluminum.
.6 CAN/CSA-G164-M92(R2003), Hot Dip Galvanizing of Irregularly Shaped Articles.

.3 Master Painters Institute (MPI):
.1 MPI Architectural Specification Manual, 2004 (referred to herein as "MPI Manual")
.2 MPI Approved Product List, January 2009 (Referred to herein as "MPI APL").

.4 The Society for Protective Coatings (SSPC):
.1 SSPC-Paint 12 1982, Paint Specification No. 12: Cold Applied Asphalt Mastic (Extra Thick Film).

1.3 QUALIFICATIONS

.1 The work of this Section shall be fabricated in the factory by a manufacturer with minimum ten (10) years experience in the actual production of the specified products and shipped to the site, k/d.

.2 The work of this Section shall be installed by a company licensed by the material manufacturer as an approved installer.

.3 Employ only skilled tradesmen who are experienced in this work.

.4 If requested by the Consultant, provide evidence of previously completed projects of a similar nature.

1.4 SUBMITTALS

.1 General: Submit each item in this Article according to the Conditions of the Contract and the applicable Division 01 Specification Sections.

.2 Shop Drawings:

.1 Indicate materials and fully dimensioned details at a scale of no less than half full size for head, jamb and sill, profiles of components, interior and exterior trim, junction between combination units, fully dimensioned elevations of units, anchorage details, locations of isolation coating, description of related components and exposed finishes fasteners, and caulking. Indicate the locations of manufacturer's nameplates.

.2 Provide complete fabrication and installation details of custom exterior trim at window heads.

.3 Test Reports: Submit test reports from independent testing laboratories, acceptable to the Consultant, certifying compliance with the specification requirements for:

.1 Finish.

.2 Air tightness.

.3 Water tightness.

.4 Wind load resistance, mullion deflection.

.5 Condensation resistance.

.4 Samples:

.1 Submit a sample of a each type of window, reduced overall size but using actual sections, components and glass in specified finishes. Include a cutaway corner of each type of window.

.2 Samples to incorporate an representative example of each typical connection and each trim profile.

.3 Submit a full-size sample of a 300 mm long section of the exterior trim at the window heads. Include method of fastening and end caps. Use actual materials and finishes proposed for the work.

.5 Post-installation certification: After installation, provide written certification, signed by the window manufacturer, that all items have been installed in accordance with the reviewed shop drawings to the satisfaction of the window manufacturer.

.6 Maintenance Data:

.1 Provide maintenance data for incorporation into the building operation and maintenance manual.

.2 Include maintenance data for cleaning and maintenance of aluminum finishes.

1.5 PERFORMANCE

.1 Structural performance shall be based on CAN3-S157 and a maximum deflection of 1/175 of the span.

.2 Windows shall meet or exceed the following performance classification requirements of CSA Standard CAN/CSA-A440 Windows:

.1 Air infiltration:

.1 Fixed windows: FIXED

.2 Water infiltration: B7

.3 Wind load resistance: C5

.4 Condensation resistance temperature index:

.1 Fixed windows:

(i) I_f: 66

(ii) I_g: 68

.2 Operable vents: 56.2 minimum.

.3 The design shall allow for an ambient temperature range of -35°C to +35°C without causing buckling, stresses on glass, failure of seals, undue stress on structural elements, reduction of performance or other detrimental effects.

1.6 THERMAL MOVEMENT

.1 Conduct a thermal analysis to determine the full range of shadow patterns and temperature conditions to which the glazing will be subjected after installation.

.2 Coordinate frame and glass dimensions to ensure that adequate provision is made to provide for thermal movement of the glass.

.3 Sealed thermal units which crack or break as a result of thermal stresses will be replaced, immediately, at no cost to the Owner.

1.7 WARRANTY

.1 For the work of this Section, the 12-months warranty period prescribed in the General Conditions of the Contract, is extended to 10 years.

1.8 PROTECTION

.1 Apply temporary protective coating to finished surfaces. Remove coating after erection. Do not use coatings that will become hard to remove or leave residue.

.2 Leave protective covering in place until final cleaning of building.

1.9 STORAGE AND HANDLING

.1 Store and handle materials in strict accordance with the manufacturer's recommendations.

PART 2 PRODUCTS

2.1 GENERAL

.1 This specification is based on aluminum windows as manufactured by Alumicor.

.2 Requests for substitutions will be considered in accordance with provisions of Section 01 25 00 "Substitution Procedures". Acceptance of alternative products is subject to the approval of the Consultant.

2.2 PRODUCTS

.1 Alumicor, Model ShadowLine 970.
- .1 Mullion: 19mm x 158.8mm
- .2 Nose: 50.8mm

.2 Performance Requirements:
- .1 Ensure system is designed to accommodate the following without damage to components or deterioration of seals:
  - .1 Thermal Resistance of:
    - .1 System U-Value: 0.45 maximum.

2.3 MATERIALS

.1 Extrusions shall be 6063 T5 alloy and temper, thermally broken, minimum wall thickness 3 mm (1/8"). Main frame members to be 127 mm deep.

.2 Formed aluminum components shall be of alloy and temper suitable for their purpose and finish.

.3 Thermal Break separator: Extruded rigid virgin polyvinyl chloride, interlocked between inner and outer frames.

.4 Aluminum sheet: Aluminum Association 5005-H34 alloy and temper:
- .1 Exposed to sight: Anodizing quality.
- .2 Not exposed to sight: Utility grade.

.5 Fasteners shall be 300 series stainless steel or 400 series stainless steel cadmium plated and of sufficient size and quantity to perform their intended function.

.6 Provide aluminum sills, minimum 3 mm thick extrusions, profile to suit, c/w jamb drip deflectors and concealed fastening, finish to match windows.

.7 Glass as specified in Section 08 80 50 "Glazing".

.8 Glazing materials:
- .1 Glazing gaskets shall be extruded, black, closed cell or dense elastomer of durometer appropriate to the function.
- .2 Glazing tapes shall be macro-polyisobutylene, highly adhesive and elastic with continuous built-in shim.

.9 Weatherstripping: Manufacturer's standard for each application. Double weather-strip operable window units at all sash perimeters. Install all weather-stripping in specially extruded ports and secure to prevent shrinkage or movement.

.10 Hardware: Manufacturer's standard. For each vent, provide the following:
- .1 Pair of hinges designed to permit cleaning of the outside surface of the window from the suite interior.
- .2 Remote roto-operator to enable high level windows to be operated from floor level.
- .3 Remote latching device that can be engaged and released from floor level.

.11 Galvanized steel flashings: ASTM A446, minimum 28 gage (0.38 mm thick).

.12 Joint sealants: Butyl as recommended by the window manufacturer.

.13 Zinc-rich coating: MPI APL #19.

.14 Isolation coating: alkali resistant bituminous paint to SSPC Paint-12.

2.4 FINISHES

.1 Finish exterior aluminum surfaces with electrolytically deposited, clear anodic finish, designation AA-M12-C22-A41, Architectural Class I, in accordance with Aluminum Association Designation System for Aluminum Finishes.

.2 Finish interior aluminum surfaces with electrolytically deposited, clear anodic finish, designation AA-M12-C22-A31, Architectural Class II, in accordance with Aluminum Association Designation System for Aluminum Finishes.

.3 Steel clips and reinforcement: 380 g/m^2 zinc coating to ASTM A123.

.4 Isolate aluminum from the following components by a heavy coating of bituminous coating:
- .1 Dissimilar metals except stainless steel, zinc or white bronze in small area.

.2 Concrete, mortar and masonry.
.3 Wood.

2.5 FABRICATION

.1 Fabricate framing from extrusions of size and shape shown on the reviewed shop drawings.

.2 Framing shall be two part construction integrated with a glass-reinforced nylon thermal break to form a rigid composite assembly without the use of fasteners or other thermal bridging elements.

.3 The composite frame assembly shall have a minimum resistance to shear between the aluminum and the thermal break materials of 4815 N/100 mm.

.4 Dry shrinkage of the thermal break shall not exceed 0.10% of the framing member length.

.5 Fixed framing shall be designed for screw spline corner construction. Operating vent sash extrusions shall be tubular with mitred, clip, adhesive, stake joint construction.

.6 All framing joints shall be accurately machined to allow site assembly and sealing, providing neat weathertight connections.

.7 Glass stops shall be lock-in screwless type.

.8 Fabricate units square and true with maximum tolerance of plus or minus 1.5 mm for units with a diagonal measurement of 1800 mm or less and plus or minus 3 mm for units with a diagonal measurement over 1800 mm.

.9 All glazing pockets shall be vented, pressure equalized and drained to the exterior.

.10 An elastomeric air-seal gasket shall be installed around the full perimeter of the glass and seated at corners with silicone sealant, properly adhered to the air seal gasket.

.11 Brace frames to maintain squareness and rigidity during shipment and installation.

.12 Provide structural anchors with an allowance for adjustment and welded after final window unit alignment. Touch-up with zinc-rich coating immediately following the alignment and fastening operation.

.13 Glaze windows in accordance with the manufacturer's recommendations.

2.6 ISOLATION COATING

.1 High build bituminous paint, SSPC Paint 12.

.2 Isolate aluminum from the following components by means of isolation coating:
.1 Dissimilar metals except stainless steel, zinc, or white bronze of small area.
.2 Concrete, mortar and masonry.
.3 Wood.

PART 3 EXECUTION

3.1 EXAMINATION

.1 Examine areas and conditions under which the work is to be performed and notify the Consultant in writing of conditions detrimental to the proper and timely completion of the work.

.2 Do not proceed with the work until unsatisfactory conditions have been corrected to the satisfaction of the installer.

.3 Take field measurements to verify or supplement dimensions.

.4 Commencement of the installation will be construed as acceptance of the site conditions and, thereafter, the Contractor shall be fully responsible for satisfactory work as specified herein.

3.2 COORDINATION AND PREPARATION

.1 Anchorage Inserts: Coordinate with the concrete installer and ensure that inserts for anchorage which are required to be installed by that trade are supplied by this Section at the appropriate time in the construction schedule.

3.3 INSTALLATION

.1 Install the windows in accordance with the manufacturer's instructions and the reviewed shop drawings.

.2 Arrange components to prevent abrupt variation in colour.

.3 Set all frames and glazing material in their proper location, level, square, plumb, at proper elevations and in proper alignment with other work.

.4 Fasten securely.

.5 Touch-up field welds and anchoring brackets with 2 coats of zinc-rich paint. Surfaces must be clean, free of grease, paint, mill scale and rust prior to application of touch-up.

3.4 INSULATING SEAL

.1 Fill all voids with urethane foam insulating sealant. Refer to Section 07 21 19.

3.5 CAULKING

.1 Seal the perimeter of the window frame against adjacent materials on the interior and exterior.

.2 Apply sealant in accordance with Section 07 92 00 "Joint Sealants". Conceal sealant within the window units except where exposed use is permitted by the Consultant. Colour of exposed sealant to match finish.

3.6 PROTECTION

.1 During and after installation protect the work of this Section from damage. Remove all corrosive or foreign material or droppings resulting from the work of this or other trades. Make good damage.

3.7 CLEANING

.1 Upon completion of the installation, remove from the premises all surplus material, dirt and debris caused by the work of this Section and leave the installation clean.

.2 Clean any drippage and spills of surplus sealant from adjacent surfaces.

.3 Make good any damage caused by the work of this Section.

.4 Just before Contract Closeout, or when directed by the Consultant, remove protective coating and clean all surfaces, using materials and methods recommended by the window manufacturer.

END OF SECTION

PART 1 General

1.1 RELATED SECTIONS

.1 Supply only of hardware for:
- .1 Section 08 11 14 - Metal Doors and Frames
- .2 Section 08 36 13.02 – Insulated Metal Section Door
- .3 Section 08 11 16 - Aluminum Doors and Frames
- .4 Section 26 00 00 - Electrical

1.2 REFERENCE STANDARDS

.1 Standard hardware location dimensions in accordance with Canadian Metric Guide for Steel Doors and Frames (Modular Construction) prepared by Canadian Steel Door and Frame Manufacturer's Association, or as indicated for special conditions.

1.3 REQUIREMENTS OF REGULATORY AGENCIES

.1 Use hardware for doors in fire separations and exit doors certified by a Canadian Certification Organization accredited by Standards Council of Canada.

.2 All fire and life safety codes shall be met as required by the authority having jurisdiction.

.3 Use lock and latchsets with lever handles meeting requirements of CAN/CSA-B651-04, Barrier Free Design, unless specified otherwise.

1.4 SUBMITTALS

.1 Product Data:
- .1 Submit manufacturer's printed product literature, specifications and data sheets indicating hardware proposed, including ANSI function where ANSI used in this specification, grade, type, series, BHMA finish, fire label listing, in accordance with Section 01 33 00 – Submittal Procedures.

.2 Samples:
- .1 Submit samples of each type of hardware specified in accordance with Section 01 33 00 – Submittal Procedures.
- .2 Identify each sample by label indicating applicable specification paragraph number, brand name and number, finish and hardware package number.
- .3 After approval samples will be returned for incorporation in the Work.

.3 Hardware List:
- .1 Submit a typewritten Finishing Hardware schedule in accordance with Section 01 33 00 – Submittal Procedures.
- .2 Indicate specified hardware, including make, model, base material, function, size, finish and other pertinent information.

.4 Test Reports: Certified test reports showing compliance with specified performance characteristics and physical properties.

1.5 CLOSEOUT SUBMITTALS

.1 Provide operation, maintenance data, parts list and manufacturer's instructions for each type of locksets, fire exit hardware, door closers and door holders for incorporation into manual specified in 01 78 00 – Closeout Submittals.

1.6 MAINTENANCE MATERALS SUBMITTALS

.1 Extra Materials:
- .1 Provide maintenance materials in accordance with Section 01 00 10 – General Instructions

.2 Tools:
- .1 Supply two sets of wrenches for locksets, exit devices and door closers.

1.7 QUALITY ASSURANCE

.1 Regulatory Requirements:
- .1 Use hardware for doors in fire separations and exit doors certified by a Canadian Certification organization accredited by Standards Council of Canada.
- .2 All fire and life safety codes shall be met as required by the authority having jurisdiction.
- .3 Use lock and latchsets with lever handles meeting requirements of CAN/CSA- B651, Barrier Free Design, unless specified otherwise.

.2 Pre-installation Meetings:
- .1 Conduct pre-installation meeting to verify project requirements, manufacturer's installation instructions and manufacturer's warranty requirements.
- .2 Attend site meetings as requested by the Contractor.

.3 Certificates: product certificates signed by manufacturer certifying materials comply with specified performance characteristics and criteria and physical requirements.

1.8 DELIVERY, PACKAGING AND STORAGE

.1 Deliver, store and handle materials in accordance with Section 01 61 00 and with manufacturer's written instructions.

.2 Delivery and Acceptance Requirements: deliver materials to site in original factory packaging, labelled with manufacturer's name and address.

.3 Package items of hardware including fastenings, separately or in like groups of hardware, label each package as to item definition and location.

.4 Storage and Handling Requirements:
- .1 Store materials off ground, in dry location and in accordance with manufacturer's recommendations in clean, dry, well-ventilated area.
- .2 Store and protect door hardware from nicks, scratches, and blemishes.
- .3 Protect prefinished surfaces with wrapping, strippable coating.
- .4 Replace defective or damaged materials with new.

1.9 GUARANTEE

.1 All hardware supplied under the approved hardware schedule will be guaranteed by the Manufacturer for a period of two (2) year after final acceptance of the project. Door closers will be guaranteed for five (5) years. Operators to be guaranteed for a period of two (2) years.

1.10 FASTENINGS

.1 All hardware is to be installed using manufactures' supplied fasteners. Failure to comply may void warranties and applicable licensed labels. Self-tapping/tek screws will not be acceptable on this project.

.2 Supply screws, bolts, expansion shields and other fastening devices required for proper installation and operation of hardware.

.3 Exposed fastening devices to match finish of hardware.

.4 Push and kick plates shall be supplied with self-adhesive tape unless specified otherwise than supply countersunk flat head, oval head socket screws to suit door material.

1.11 KEYING

.1 All temporary Schlage construction use cylinders are to be supplied keyed alike or different as required.

.2 Supply twelve (12) Schlage change keys for each keyed alike group of temporary construction use Schlage cylinders.

.3 All permanent Medeco cylinders and keys are to be supplied and installed by the University.

.4 The Door Hardware Supplier is to ensure all temporary cylinders are supplied with cams/tailpieces suitable for specified lock functions. Supply all compression rings, trim collars and blocking rings to suit.

.5 The Contractor is responsible for providing locks and cylinders as required for his own use during the period of construction.

1.12 FINISHES

.1 Hinges:
- .1 628 clear anodized aluminum
- .2 630 stainless steel metal, satin
- .3 652 satin chromium plating on steel

.2 Locksets
- .1 626 satin chromium plated

.3 Cylinders
- .1 626 satin chromium plated

.4 Exit Devices
- .1 626 chromium, dull

.5 Electric Strikes
- .1 630 stainless steel, satin

.6 Door Pulls
- .1 630 stainless steel, satin

.7 Door Closers
.1 689 powder coat aluminum

.8 Door Operators
.1 689 powder coat aluminum

.9 Protection Plates
.1 630 stainless steel, satin

.10 O/H Stops & Holders
.1 630 stainless steel, satin

.11 Floor & Wall Stops
.1 626 satin chromium

.12 Threshold:
.1 AL clear anodized aluminum

.13 W/Stripping
.1 AL clear anodized aluminum

1.13 ABBREVIATIONS

.1	ALD	aluminum door
.2	ALF	aluminum frame
.3	HMD	hollow metal door
.4	INS. HMD	insulated hollow metal door
.5	PSF	pressed steel frame
.6	SCWD	solid core wood door
.7	LH	left hand
.8	RH	right hand
.9	LHR	left hand reverse
.10	RHR	right hand reverse
.11	MS	machine screw
.12	HR/FR	hour/fire rated
.13	MIN/FR	minute fire rated
.14	TB	through bolted
.15	L.T.S.	length to suit
.16	T.B.C.	to be confirmed

PART 2 Products and Acceptable Manufacturers

2.1 HINGES

.1 Butts and hinges:
- .1 Hinges shall comply with ANSI/BHMA A156.1, All steel base, Full mortise, Five knuckle standard weight ball bearing, with Non Removable Pin. Finish BHMA #630.
- .2 Supply 1-1/2 pair per door leaf for doors up to 2285mm in height. Supply one additional hinge for each additional 762mm of height or fraction thereof. Doors, 45mm thickness, up to 914mm in width, supply 114mm high hinges; over 914mm to 1220mm, supply 127mm high hinges.

2.2 CONTINUOUS HINGES

.1 Full mortise, heavy duty, no inset, minimum thirty-two thrust bearings, staggered screw holes. Length to match door height. 12.7mm of door heel exposure is acceptable and recommended to be sure the moving hinge leaf does not extend below the door.

2.3 LOCKSETS

.1 Mortise Locks shall comply with ANSI/BHMA A156.13, Heavy duty mortise type. Series 1000, grade 1. Lever design to have flat face (117mm long), 63.5mm overall projection, with end returning to 13mm from face of door. Provide dust boxes behind all strikes. Functions as specified.

2.4 KEYPAD ACCESS LOCKS

.1 Keypad Mortise Locks:
- .1 Stand Alone, All-metal, vandal-resistant
- .2 12-Button Keypad
- .3 Min. 100 User Codes
- .4 Finished to BHMA #626

.2 Keypad Narrow Stile Locks:
- .1 Stand Alone, All-metal, vandal-resistant
- .2 Single Combination
- .3 12-Button Keypad
- .4 Min. 100 User Codes
- .5 Finished to BHMA #626

2.5 EXIT DEVICES

.1 Mortise Exit devices:
- .1 Shall comply with ANSI/BHMA A156.3, type Mortise lock, function field selectable, grade 1, conventional design. Lever design to have flat face (117mm long), 63.5mm overall projection, with end returning to 13mm from face of door. Finished to BHMA #626. Functions as specified.

.2 Narrow Stile Concealed Vertical Exit devices:
- .1 Shall comply with ANSI/BHMA A156.3, function field selectable, grade 1, conventional design. Lever design to have flat face (117mm long), 63.5mm overall projection, with end returning to 13mm from face of door. Finished to BHMA #626. Functions as specified.

2.6 ELECTRIC STRIKE

.1 Electric Strikes shall comply with ANSI/BHMA A156.31. Heavy Duty all stainless steel construction. Adjustable strike box to compensate for any misalignment of the door or frame. Power Supply: 24V
- .1 Fail Safe

2.7 DOOR CLOSERS

.1 Door Closers shall comply with ANSI/BHMA A156.4, Heavy duty. Full rack and pinion hydraulic action. Cast iron cylinder body. Adjustable spring power and back check. Size in accordance with ANSI/BHMA A156.4, table A1. Supply any adaptor plates required to facilitate installation.
- .1 DEL - delayed action
- .2 EDA - extra duty parallel arm
- .3 LPA - less parallel arm
- .4 H/O - hold open arm

2.8 MANUAL FLUSHBOLTS

.1 Flushbolts shall comply with ANSI/BHMA A156.16. Flush type, lever extension.

2.9 CO-ORDINATORS

.1 Designed to become an integral part of the door frame. Housing and filler piece to extend full width of frame.

2.10 AUTOMATIC SWING DOOR OPERATORS

.1 Coordinate the work of all trades, including glass and glazing, masonry, and electrical requirements covered in manufacturer's details and appropriate sections of the specification.

.2 Operators shall open the door with a 1/8 HP motor through reduction gears, door arm, and linkage assembly, as follows
- .1 Low energy operator, door opening time: not be less than five (5) seconds.
- .2 The drive train shall have a positive, constant engagement. The operator shall stop the door in the open position by electrically reducing the motor voltage and stalling against a 90° stop.
- .3 Close the door by spring energy; controlled by employing the motor as a dynamic brake.
- .4 Door closing time shall not be less than five (5) seconds.
- .5 Pre-load closing spring for positive closing action at a low material stress level for long spring life.
- .6 Provide obstruction detection to reverse door when closing if an object stops the door and to stop door from opening if object is detected on swing side.
- .7 The operator shall function as a manual door closer in the direction of swing with or without electrical power.

.3 The door forces and speeds generated during power opening and manual opening in both directions of swing and spring closing in both directions of swing shall conform to the requirements of ANSI A156.10 or A156.19.

2.11 UNIVERSAL RESTROOM CONTROLS KITS

.1 Barrier Free Restroom Control Kit:
- .1 Flush Mounted 4½" Illuminated Combo Push Plate and Sign (Push to Open and Push to Lock), with English sign.
- .2 Flush Mounted 4½" Illuminated Push Plate (Wheelchair Symbol & Push to Open), with English signs.
- .3 Multi-Function Relay.
- .4 Magnetic Door Contact.
- .5 Acceptable Manufactures:
  - .1 Camden Door Controls, Model CX-WC13AXFM

.2 Emergency Call System Kit:
- .1 Flush Mounted Double Gang Mushroom Push Button 'Push for Emergency Assistance' and LED Annunciator.
- .2 Single Gang LED Dome Light with Sounder.
- .3 Emergency Call System Occupant Instructional Sign.
- .4 Acceptable Manufactures:
  - .1 Camden Door Controls, Model CM-WEC10K2

2.12 KICK PLATES

.1 1.27mm (0.050") thickness type 304 stainless steel. To be drilled and countersunk where noted screw fasteners. Height: 305mm x length of door - minus 25mm each side. Confirm noted plate lengths suitable before ordering.

2.13 PUSH PLATES

.1 1.27mm (0.050") thickness type 304 stainless steel. To be drilled and countersunk where noted screw fasteners. Height as noted x length to suit. Confirm noted plate lengths suitable before ordering.

2.14 O/H STOPS

.1 Glynn-Johnson heavy duty overhead concealed "100" series and surface "90" series.

.2 All listed degrees of hold open should be reviewed and confirmed before preparation and/or installation.

2.15 DOOR PULLS

.1 25.4mm round diameter, "D" shape, 90 degree offset, 304.8mm centres. Type 304 stainless steel.

.2 25.4mm round diameter "D" shape, 304.8mm centres on 101.6mm x 406.4mm backplate. Type 304 stainless steel material.

2.16 FLOOR AND WALL STOPS

.1 Cast brass/bronze material except where specified zinc die cast. Rise to suit door undercut.

.2 Wall stops shall have a metal backplate secured to wall with (2) screws and shields. Housing and rubber insert fits over backplate and is secured with inconspicuous set screw. No screws or holes shall be visible on face of bumper.

2.17 DUST PROOF STRIKE

.1 Spring-loaded plunger returns to floor:
.1 Face-plate: 1-17/16” Diameter.
.2 Body: 1-3/16” Diameter x 1-7/8” Deep.

2.18 THRESHOLD

.1 Thermally Broken Extruded Aluminum. Slope and height to meet barrier free accessible requirements. Width to suit jamb and floor conditions. Oversized in length to allow coping around pressed steel frame faces.

2.19 AUTOMATIC DOOR BOTTOMS

.1 Heavy duty mortise type. Provide end caps where open ends of door bottoms are exposed. No visible preps in either door edges, exception trigger mechanism. Insert to suit floor material.

2.20 DOOR SWEEP

.1 Aluminum extrusion c/w silicone seal insert. Applied to bottom exterior face of door. Predrilled with oblong screw holes for adjustment. Less cUL sticker where noted.

2.21 MEETING ROOM ASTRAGAL

.1 Extruded aluminum c/w solid neoprene inserts. Predrilled with oblong screw holes for adjustment. 25.4mm wide x 5.6mm thick aluminum extrusion. Astragal to be tested to sound acoustical ratings and fire rated.

2.22 DOOR SILENCERS - METAL

.1 Silencers shall comply with ANSI/BHMA 156.16, L03011, made from 60 Durometer styrene butadiene rubber.

2.23 GASKETING

.1 Extruded aluminum c/w silicone rubber inserts. Predrilled with oblong screw holes for adjustment. 25.4mm wide x 6.4mm thick aluminum extrusion. Silicone insert integrated into and under centre support leg of extrusion ensuring seal against face of frame stop.

2.24 WEATHERSTRIPPING

.1 Extruded aluminum with silicone insert. Predrilled with oblong screw holes for adjustment. Designed to provide continuous weather seal at head and jambs. Surface hardware to be attached to frame through weather-strip section. Confirm frame stop width sufficient to support 38.1±mm wide extrusion. Provide shim as required.

.2 Extruded aluminum with silicone inserts. Predrilled with oblong screw holes for adjustment. Screw attachment does not interfere with silicone.

2.25 SMOKE GASKET

.1 Perimeter seal consists of tear drop shaped 12.7mm wide x 6.35mm self-adhesive silicone.

2.26 SOUNDTRAP & STRIPPING

.1 Fully adjustable Head and Jamb seals consisting of Solid Neoprene gasket. Height x length to suit door and frame size.

PART 3 EXECUTION

3.1 INSTALLATION

.1 When requested, furnish metal door and frame manufacturer with complete instructions and templates for preparation of their work to receive hardware.

.2 Only tradesmen competent in the installation of Finishing Hardware shall be used for this purpose. Qualification would require a minimum (5) years' experience in commercial application. The installer shall adjust, clean and make good all installation of Finishing Hardware to the satisfaction of the Consultant.

.3 The Contractor is responsible for ensuring the door preps for cylinder holes are where required and are aligned properly with mortise locks. The Contractor is to use his own "try-out" cylinders prior to the Owner beginning installation of the permanent cylinders. Any holes found to be misaligned will be rectified by the Contractor.

.4 Section 26 (Electrical) to provide backboxes, conduits c/w pull wires and power supply for all access control systems and related hardware.

.5 Section 26 (Electrical) to provide 120V AC receptacles for control boxes. Section 26 to provide and install conduit/pull wire for air tubing and low voltage wiring from control boxes to openers and actuators. Recessed electrical boxes for actuators to be supplied and installed by Electrical. Install all door hardware for operation of door openers at not more than 1200mm and not less than 900mm centre line above the finished floor as per the O.B.C.. The Door Hardware Supplier is responsible for the installation of the door openers and all related hardware. The certified installer is to be approved by the manufacturer as having qualifications to ensure the proper operation of all components related to the opener systems.

.6 Wiring schematics detailing all electrical components for each opening to be prepared by the hardware manufacturer at the request and with the support of the Door Hardware Supplier.

.7 Kick plates are to be installed 1.59mm maximum up from the bottom edge of door on single doors install in centre of the door equally spaced to clear between the frame jamb stops.

.8 Contractor to ensure walls are properly blocked to prevent future damage wherever surface mounted hardware i.e. wall stops are to be used.

.9 Thresholds are to be extended from masonry opening to masonry opening and are to be coped around the pressed steel frames. Installer to caulk threshold base to ensure proper seal.

.10 Gasketing is not to be installed until final coat of paint has been applied to the door and frame and is completely dry.

.11 Door Supplier, when templating, must consider surface mounted w/stripping W-20S which is 7.9mm thick. Exit device strikes, door closer parallel arm brackets and overhead stop/holder brackets will mount on top of the weather-stripping.

3.2 INSPECTIONS

.1 A Hardware Specialist engaged by the General Contraction shall make periodic site inspections during installation of hardware to ensure that all hardware supplied is being applied in accordance with specifications, details and Consultant's directions. Inform the Contractor and the Consultant in writing of such inspections, pointing out errors, omissions, etc.; so that they may be corrected.

.2 Final inspection to be carried out by the Hardware Specialist when all hardware has been installed, to ensure that all hardware components (Door Stops, Door Closures, Door Sweeps, Gaskets, Astragals, Latches Access Controlled Door, etc.) work as a total system and operate as per Industry Standards. Representative to provide written certification that hardware has been installed and adjusted as intended.

.3 The Criteria for Acceptance includes, but not limited to the following:
- .1 Door Closes from any position in its swing, including from a position resting on the latch.
- .2 All Door Pins Fit Securely in all receptacles.
- .3 No excessive play of latch in strike.
- .4 No preload excreted on electrified hardware.
- .5 Door does not rub on floor or any part of frame.
- .6 Door Closure is adjusted properly, (Not Over tightened to make up for other door deficiencies).
- .7 No excessive gaps under, above or between twin doors.

3.3 ADJUSTING

.1 Adjust door hardware for optimum, smooth operating condition, safety and for weather tight closure.

.2 Lubricate hardware, operating equipment and other moving parts.

.3 Adjust door hardware to provide tight fit at contact points with frames.

3.4 CLEANING

.1 Perform cleaning after installation to remove construction and accumulated environmental dirt.

.2 Clean hardware with damp cloth and approved non-abrasive cleaner. Polish hardware in accordance with manufacturer's instructions.

.3 Remove protective material from hardware items where present.

.4 Upon completion of installation, remove surplus materials, rubbish, tools and equipment barriers.

3.5 DEMONSTRATION

.1 Maintenance Staff Briefing:
- .1 Brief maintenance staff regarding:
  - .1 Proper care, cleaning and general maintenance of projects complete hardware.
  - .2 Description, use, handling, and storage of keys.
  - .3 Use, application and storage of wrenches for locksets and door closers.
- .2 Demonstrate operation, operating components, adjustment features and lubrication requirements.

3.6 SCHEDULE

.1 The following is a list of hardware to be used to meet the Clients standards on this project. Any deviation from the hardware scheduled shall be replaced with the proper Hardware at the Door Hardware Supplier's expense. Acceptable alternates as listed. Substitutions without prior approval will not be accepted in the shop drawing submission.

Hardware schedule as follows:

ITEM #1 1 SGLE DOOR 101A EXTERIOR TO APPARATUS BAY 101 LHR
1/965x2134 x45 INS.HM/ TB.PSF
TYPE QL/FC1

3 EA HINGE
1 EA MORTISE EXIT DEVICE (KEYPAD ACCESS LOCK)
1 EA DOOR CLOSER PUSH SIDE
1 EA KICK PLATE
1 EA OVERHEAD STOP
1 LEN WEATHERSTRIPPING
2 EA DOOR SWEEP
1 LEN THRESHOLD
3 EA DOOR SILENCER

ITEM #2 1 EA DOOR 101B EXTERIOR TO APPARATUS BAY A1
ITEM #3 1 EA DOOR 101C EXTERIOR TO APPARATUS BAY A1
ITEM #4 1 EA DOOR 101D EXTERIOR TO APPARATUS BAY A1
ITEM #5 1 EA DOOR 101E EXTERIOR TO APPARATUS BAY A1
3658x4267x51 OVERHEAD SECTIONAL DOOR
TYPE O/H

HARDWARE COMPLETE BY DOOR SUPPLIER

ITEM #6 1 SGLE DOOR 101F CORRIDOR 121 TO APPARATUS BAY 101 RH
1/965x2134x45 HMD/PSF
TYPE HG/FC1 2 HR FIRE SEPARATION

3 EA HINGE
1 EA EXIT DEVICE (PASSAGE FUNCTION)
1 EA DOOR CLOSER PULL SIDE
1 EA KICK PLATE
1 EA OVERHEAD STOP
1 LEN SMOKE GASKET
3 EA DOOR SILENCER

ITEM #7 1 SGLE DOOR 101G EXTERIOR TO APPARATUS BAY 101 RHR
1/965x2134x45 INS.HM/ TB.PSF
TYPE QL/FC1

3	EA	HINGE	
1	EA	MORTISE EXIT DEVICE	(NIGHT LATCH)
1	EA	DOOR CLOSER	PUSH SIDE
1	EA	KICK PLATE	
1	EA	OVERHEAD STOP	
1	LEN	WEATHERSTRIPPING	
2	EA	DOOR SWEEP	
1	LEN	THRESHOLD	
3	EA	DOOR SILENCER	

ITEM #8 1 DBLE DOOR 111A APPARATUS BAY 101 TO SUPPORT 111 LHA/RH
2/915x2134x45 HMD/PSF
TYPE F2/FC1 2 HR FIRE SEPARATION

6	EA	HINGE	
1	EA	LOCKSET	(CLASSROOM FUNCTION)
2	EA	DOOR CLOSER	PUSH SIDE
1	SET	FLUSHBOLT	
1	EA	CO-ORDINATOR	
1	SET	MEETING ASTRAGAL	
2	EA	AUTO DOOR BOTTOM	
1	LEN	SOUNDTRAP & STRIPPING	
2	EA	KICK PLATE	
1	EA	DUST-PROOF STRIKE	
1	EA	OVERHEAD STOP	(ACTIVE LEAF)
1	EA	FLOOR STOP	(INACTIVE LEAF)
6	EA	DOOR SILENCER	

ITEM #9 1 SGLE DOOR 111B SUPPORT 111 TO SCBA ROOM 111B LHR
1/965x2134x45 HMD/PSF
TYPE F/FC1

3	EA	HINGE	
1	EA	LOCKSET	(STOREROOM FUNCTION
1	EA	DOOR CLOSER	PULL SIDE
1	EA	AUTO DOOR BOTTOM	
1	LEN	SOUNDTRAP & STRIPPING	
3	EA	DOOR SILENCER	

ITEM #10 1 SGLE DOOR 122A CORRIDOR 121 TO DISPATCH 122 RH
1/965x2134x45 HMD/PSF
TYPE F/FC1

3 EA HINGE
1 EA LOCKSET (OFFICE FUNCTION)
1 EA OVERHEAD STOP
3 EA DOOR SILENCER

ITEM #11 1 SGLE DOOR 123A CORRIDOR 121 TO MALE WASHROOM 123 RH
1/965x2134x45
TYPE F/FC1

3 EA HINGE
1 EA DOOR CLOSER PULL SIDE
1 EA KICK PLATE
1 EA PUSH PLATE
1 EA D-PULL
1 EA WALL STOP
3 EA DOOR SILENCER

ITEM #12 1 SGLE DOOR 124A EXTERIOR TO ENTRY 124 RHR
1/965x2134x45 AL/AL
TYPE FG

HARDWARE TO BE SUPPLIED BY ALUMINUM DOOR MANUFACTURE

1 EA CONTINUOIS HINGE
1 EA NARROW STILE CONCEALED VERTICAL ROD EXIT DEVISE – KEYPAD NARROW STILE
1 EA AUT. OPERATOR
2 EA DOOR SWEEP
1 EA DUST-PROOF STRIKE
1 EA THRESHOLD
1 LEN WEATHERSTRIPPING
3 EA DOOR SILENCER

* THRESHOLD + WEATHER STRIP PART OF ALUMINUM DOOR AND FRAME SUPPLIER *

ITEM #13 1 SGLE DOOR 124B ENTRY 124 TO CORRIDOR 121 RHR
1/965x2134x45 AL/AL
TYPE FG

HARDWARE TO BE SUPPLIED BY ALUMINUM DOOR MANUFACTURE

1 EA CONTINUOIS HINGE
1 EA NARROW STILE CONCEALED VERTICAL ROD EXIT DEVISE
1 EA AUT. OPERATOR
1 EA DUST-PROOF STRIKE
3 EA DOOR SILENCER

ITEM #14 1 SGLE DOOR 124C CORRIDOR 121 TO ELEC/MECH 112 LH
1/965 x2134 x45 HMD/PSF
TYPE F/FC1

3 EA HINGE
1 EA LOCKSET (STOREROOM FUNCTION)
1 EA DOOR CLOSER PUSH SIDE
1 EA KICK PLATE
1 EA AUTO DOOR BOTTOM
1 LEN SOUNDTRAP & STRIPPING
3 EA DOOR SILENCER

ITEM #15 1 SGLE DOOR 125A CORRIDOR 121 TO FEMALE WASHROOM 125 RH
1/965x2134x45
TYPE F/FC1

3 EA HINGE
1 EA DOOR CLOSER PULL SIDE
1 EA KICK PLATE
1 EA PUSH PLATE
1 EA D-PULL
1 EA WALL STOP
3 EA DOOR SILENCER

ITEM #16 1 SGLE DOOR 126A CORRIDOR 121 TO CHIEF 126 RH
1/965 x2134 x45 HMD/PSF
TYPE F/FC1

3 EA HINGE
1 EA LOCKSET (OFFICE FUNCTION)
1 EA OVERHEAD STOP
3 EA DOOR SILENCER

ITEM #17 1 SGLE DOOR 127A CORRIDOR 121 TO UNIVERSAL W.R. 127 LH
1/965x2134x45 SCWD/PSF
TYPE F/FC1

3	EA	HINGE	
1	EA	LOCKSET	(STOREROOM FUCTION)
1	EA	ELECT. STRIKE	
1	EA	AUT. OPERATOR	
1	EA	UNIVERSAL RESTROOM CONTROL KIT	
1	EA	POWER SUPPLY	CX-PS13
1	EA	TRANSFORMER	CX-TRX-4024
1	EA	TRANSFORMER/RECIFIER	CX-TRK-2450
1	EA	KICK PLATE	
1	EA	O/H STOP	
3	EA	DOOR SILENCER	
1	EA	INSTALLATION	EMERGENCY CALL KIT / AUTO OPERATOR / WASHROOM PACKAGE

* HARDWARE SUPPLIER TO SUPPLY AND INSTALL AUTO OPERATOR, WASHROOM RELAY PACKAGE AND EMERGENCY CALL KIT.
* INSTALLER OF AUTO OPERATOR, WASHROOM RELAY PACKAGE AND EMERGENCY CALL KIT TO PROVIDE PORTAL DRAWINGS.
* POWER, CONDUIT AND ANY REQUIRED BACK BOXES FOR EMERGENCY CALL KIT AND OPERATOR IS BY ELECTRICAL CONTRACTOR.
* INSTALLER OF COMPONENTS IS RESPONSIBLE FOR ALL COORDINATION WITH GENERAL CONTRACTOR AND ELECTRICAL CONTRACTOR.

** MODE OF OPERATION

- ELECTRIC STRIKE “OPEN” AT ALL TIMES.
- ENTRANCE TO WASHROOM IS BY MANUALLY PUSHING DOOR OPEN OR BY PUSHING OUTSIDE ACTUATOR WHICH WILL BEGIN OPERATOR CYCLE.
- PUSHING ‘PUSH TO LOCK’ SWITCH INSIDE WASHROOM LOCKS ELECTRIC STRIKE, DEACTIVATES OUTSIDE ACTUATOR AND LIGHTS BOTH ILLUMINATED ENCLOSURE (ONE INSIDE, ONE OUTSIDE) INDICATING WASHROOM IS IN USE.
- EXIT FROM WASHROOM IS BY MANUALLY TURNING LEVER AND PULLING DOOR OPEN OR PUSHING ACTUATOR INSIDE WASHROOM WHICH WILL “OPEN” ELECTRIC STRIKE AND BEGIN OPERATOR CYCLE.
- DOOR CONTACT RESETS SYSTEM FOR NEXT USER.
- EMERGENCY PUSH BUTTON INSIDE WASHROOM ACTIVATES BOTH ANNUNCIATORS, AND UNLOCKS ELECTRIC STRIKE FOR EMERGENCY ACCESS.

* OPERATOR INSTALLER IS RESPONSIBLE TO ACHIEVE MODE OF OPERATION.

ITEM #18 1 SGLE DOOR 128A CORRIDOR 121 TO CAPTAIN 128 LH
1/965x2134x45 HMD/PSF
TYPE F/FC1

3	EA	HINGE	
1	EA	LOCKSET	ANSI F07
1	EA	TEMP. CONST. CYLINDER	SCHLAGE
1	EA	DOOR CLOSER	PUSH SIDE
1	EA	KICK PLATE	
1	EA	WALL STOP	
3	EA	DOOR SILENCER	

ITEM #19 1 SGLE DOORS 130A CORRIDOR 121 TO TRAINING 130 LH
1/965x2134x45 HMD/PSF
TYPE F/FC1

3	EA	HINGE	
1	EA	LOCKSET	ANSI F01
1	EA	DOOR CLOSER	PULL SIDE, H/O
1	EA	OVERHEAD STOP	
1	EA	KICK PLATE	
1	LEN	SOUNDTRAP	HEAD AND JAMB
1	LEN	SOUNDTRAP	DOOR BOTTOM
3	EA	DOOR SILENCER	

ITEM #20 1 SGLE DOORS 130B EXTERIOR TO TRAINING 130 LHR
2/915x2134x45 HMD/PSF
TYPE HG/FC1

3	EA	HINGE	
1	EA	MORTISE EXIT DEVICE	(NIGHT LATCH)
1	EA	DOOR CLOSER	PUSH SIDE
1	EA	KICK PLATE	
1	EA	OVERHEAD STOP	
1	LEN	WEATHERSTRIPPING	
2	EA	DOOR SWEEP	
1	LEN	THRESHOLD	
3	EA	DOOR SILENCER	

ITEM #21 1 DBLE DOORS 130C TRAINING 130 TO STORAGE 129 LHRA/RHR
2/915x2134x45 HMD/PSF
TYPE F2/FC1

6 EA HINGE
1 EA LOCKSET (STOREROOM FUNCTION)
1 SET FLUSHBOLT
2 EA KICK PLATE
1 EA DUST-PROOF STRIKE
1 EA WALL STOP
3 EA DOOR SILENCER

ITEM #22 1 SGLE DOORS 131A CORRIDOR 121 TO JANITOR 131 RH
1/865x2134x45 HMD/PSF
TYPE F/FC1 1 HR FIRE SEPARATION

3 EA HINGE
1 EA LOCKSET (STOREROOM FUNCTION)
1 EA KICK PLATE
1 EA WALL STOP
3 EA DOOR SILENCER

ITEM #23 1 SGLE DOORS 132A EXTERIOR TO KITCHEN 132 LHR
1/965x2134x45 INS.HM/TB.PS
TYPE HG/FC1

3 EA HINGE
1 EA MORTISE EXIT DEVICE (KEYPAD ACCESS LOCK)
1 EA DOOR CLOSER PUSH SIDE
1 EA KICK PLATE
1 EA OVERHEAD STOP
1 LEN WEATHERSTRIPPING
2 EA DOOR SWEEP
1 LEN THRESHOLD
3 EA DOOR SILENCER

END OF SECTION

PART 1 General

1.1 REFERENCES

.1 ASTM International
  .1 ASTM C 542, Standard Specification for Lock-Strip Gaskets.

.2 Canadian General Standards Board (CGSB)
  .1 CAN/CGSB-12.1, Tempered or Laminated Safety Glass.
  .2 CAN/CGSB-12.11, Wired Safety Glass.

1.2 ACTION AND INFORMATIONAL SUBMITTALS

.1 Submit in accordance with Section 01 33 00.

.2 Product Data:
  .1 Submit manufacturer's instructions, printed product literature and data sheets for glass, sealants, and glazing accessories and include product characteristics, performance criteria, physical size, finish and limitations.

.3 Samples:
  .1 Submit 300 mm x 300 mm samples for review and acceptance of each type of glass.

.4 Certificates: submit product certificates signed by manufacturer certifying materials comply with specified performance characteristics and criteria and physical requirements.

1.3 CLOSEOUT SUBMITTALS

.1 Submit in accordance with Section 01 78 00.

.2 Operation and Maintenance Data: submit operation and maintenance data for glazing for incorporation into manual.

1.4 DELIVERY, STORAGE AND HANDLING

.1 Delivery and Acceptance Requirements: deliver materials to site in original factory packaging, labelled with manufacturer's name and address.

.2 Storage and Handling Requirements:
  .1 Store materials indoors and in accordance with manufacturer's recommendations in clean, dry, well-ventilated area.
  .2 Store and protect glazing and frames from nicks, scratches, and blemishes.
  .3 Protect prefinished aluminum surfaces with wrapping.
  .4 Replace defective or damaged materials with new.

PART 2 PRODUCTS

2.1 MATERIALS

.1 Design Criteria:
- .1 Size glass to withstand wind loads, dead loads and positive and negative live loads in accordance with O.B.C.
- .2 Limit glass deflection to 1/200 flexural limit of glass with full recovery of glazing materials.

2.2 GLASS:

.1 **GL-1** - Insulated Glazing Units in Windows:
- .1 6mm Guardian TE 67 on 2nd surface.
- .2 12.5mm spacer.
- .3 6mm clear.

.2 **GL-2** - Fire Rated Interior Single Glazing:
- .1 Laminated Ceramic Glass:
  - .1 Thickness:
    - .1 Windows: 8mm overall.
    - .2 Interior Doors: 6mm overall
  - .2 Approximate Visible Transmission: 85 percent.
  - .3 Approximate Visible Reflection: 9 percent.
  - .4 Fire-rating: 20 minutes to 3 hours for doors.
  - .5 Impact Safety Resistance: ANSI Z97.1 and CPSC 16CFR1201 (Cat. I and II).
  - .6 STC Rating: Approximately 38 dB.
  - .7 Surface Finish:
    - .1 Standard Grade is polished for a surface quality that is comparable to alternative fire-rated ceramics marketed as having a premium finish.
- .2 Labeling: Permanently label each piece of Glazing with the Manufacturer logo, ULC logo and fire rating.
- .3 Fire Rating: Fire rating classified and labeled by UL for fire rating scheduled at opening locations on drawings, when tested in accordance with ASTM E2010-01, ULC Standards CAN4 S-104 and CAN4 S-106, NPFA 252 and NFPA 257.

.3 **GL-3 - Interior Doors/Windows** - Clear tempered sheet glass: to CAN/CGSB-12.1.
- .1 Thickness: 6mm
- .2 Type 2 - tempered,
- .3 Class B.

.4 **GL-4** - Insulated Glazing Units in doors and full height sidelights:
  - .1 6mm clear Type 2 – tempered, Guardian TE 67 on 2nd surface.
  - .2 12.5mm spacer.
  - .3 6mm clear Type 2 – tempered.

.5 Sealant: in accordance with Section 07 92 00 - Joint Sealants.

2.3 ACCESSORIES

.1 Setting blocks: neoprene 80-90 Shore A durometer hardness to ASTM D 2240, length of to suit glazing method, glass light weight and area.

.2 Spacer shims: neoprene 50-60 Shore A durometer hardness to ASTM D 2240, 75 mm long x one half height of glazing stop x thickness to suit application. Self-adhesive on one face

.3 Glazing tape:
- .1 Preformed butyl compound 10-15 Shore A durometer hardness to ASTM D 2240; coiled on release paper; black colour.
- .2 Closed cell polyvinyl chloride foam, coiled on release paper over adhesive on two sides, maximum water absorption by volume 2 %, designed for compression of 25 %, to effect an air and vapour seal.

.4 Glazing splines: resilient polyvinyl chloride extruded shape to suit glazing channel retaining slot, colour as selected.

.5 Glazing clips: manufacturer's standard type.

.6 Lock-strip gaskets: to ASTM C542.

PART 3 EXECUTION

3.1 EXAMINATION

.1 Verification of Conditions: verify conditions of substrates previously installed under other Sections or Contracts are acceptable for glazing installation in accordance with manufacturer's written instructions.

3.2 WORKMANSHIP

.1 Verify that openings for glazing are correctly sized and within tolerance.

.2 Verify that surfaces of glazing channels or recesses are clean, free of obstructions, and ready to receive glazing.

.3 Visually inspect substrate in presence of Consultant

3.3 PREPARATION

.1 Clean contact surfaces with solvent and wipe dry.

.2 Seal porous glazing channels or recesses with substrate compatible primer or sealer.

.3 Prime surfaces scheduled to receive sealant.

3.4 INSTALLATION: INTERIOR - DRY METHOD (TAPE AND TAPE)

.1 Perform work in accordance with GANA Glazing Manual for glazing installation methods.

.2 Perform work in accordance with GANA Glazing Manual for glazing installation methods.

.3 Place setting blocks at 1/4 points, with edge block maximum 150 mm from corners.

.4 Rest glazing on setting blocks and push against tape for full contact at perimeter of light or unit.

.5 Place glazing tape on free perimeter of glazing in same manner described.

.6 Install removable stop without displacement of tape. Exert pressure on tape for full continuous contact.

.7 Knife trim protruding tape.

3.5 CLEANING

.1 Progress Cleaning: clean in accordance with Section 01 74 11
- .1 Leave Work area clean at end of each day.
  - .1 Remove traces of primer, caulking.
  - .2 Remove glazing materials from finish surfaces.
  - .3 Remove labels.
  - .4 Clean glass and mirrors using approved non-abrasive cleaner in accordance with manufacturer's instructions.
- .2 Final Cleaning: upon completion remove surplus materials, rubbish, tools and equipment in accordance with Section 01 74 11.

3.6 PROTECTION

.1 Protect installed products and components from damage during construction.

.2 After installation, mark each light with an "X" by using removable plastic tape or paste.
- .1 Do not mark heat absorbing or reflective glass units

.3 Repair damage to adjacent materials caused by glazing installation. PERIMETER FOUNDATION INSULATION

END OF SECTION

PART 1 General

1.1 REFERENCES

.1 Aluminum Association
- .1 AA DAF 45, Designation System for Aluminum Finishes.

.2 ASTM International
- .1 ASTM C 475, Standard Specification for Joint Compound and Joint Tape for Finishing Gypsum Board.
- .2 ASTM C 840, Standard Specification for Application and Finishing of Gypsum Board.
- .3 ASTM C 954, Standard Specification for Steel Drill Screws for the Application of Gypsum Panel Products.
- .4 ASTM C 1002, Standard Specification for Steel Self-Piercing Tapping Screws for the Application of Gypsum Panel Products or Metal Plaster Bases to Wood Studs or Steel Studs.
- .5 ASTM C 1047, Standard Specification for Accessories for Gypsum Wallboard and Gypsum Veneer Base.
- .6 ASTM C 1178/C 1178M, Standard Specification for Glass Mat Water-Resistant Gypsum Backing Board.
- .7 ASTM C 1396/C 1396M, Standard Specification for Gypsum Wallboard.

.3 Underwriters' Laboratories of Canada (ULC)
- .1 CAN/ULC-S102, Standard Method of Test of Surface Burning Characteristics of Building Materials and Assemblies.

1.2 ACTION AND INFORMATIONAL SUBMITTALS

.1 Submit and/or process in accordance with Sections 01 33 00, Submittal Procedures and 01 45 00, Quality Control.

.2 Product Data:
- .1 Submit manufacturer's instructions, printed product literature and data sheets for gypsum board assemblies and include product characteristics, performance criteria, physical size, finish and limitations. Submittals

1.3 DELIVERY, STORAGE AND HANDLING

.1 Delivery and Acceptance Requirements: deliver materials to site in original factory packaging, labelled with manufacturer's name and address.

.2 Storage and Handling Requirements:
- .1 Store gypsum board assemblies materials level indoors in dry location and in accordance with manufacturer's recommendations in clean, dry, well-ventilated area.
- .2 Store and protect gypsum board assemblies from nicks, scratches, and blemishes.
- .3 Protect from weather, elements and damage from construction operations.
- .4 Handle gypsum boards to prevent damage to edges, ends or surfaces.
- .5 Replace defective or damaged materials with new.

1.4 AMBIENT CONDITIONS

.1 Maintain temperature 10 degrees C minimum, 21 degrees C maximum for 48 hours prior to and during application of gypsum boards and joint treatment, and for 48 hours minimum after completion of joint treatment.

.2 Apply board and joint treatment to dry, frost free surfaces.

.3 Ventilation: ventilate building spaces as required to remove excess moisture that would prevent drying of joint treatment material immediately after its application.

PART 2 Products

2.1 GYPSUM BOARD PRODUCTS

.1 General: Provide gypsum board of types indicated in maximum lengths available that will minimize end-to-end butt joints in each area indicated to receive gypsum board application, thicknesses as indicated. Requirements as follows except where otherwise indicated:
- .1 Width: 1219 mm.
- .2 Thicknesses: as indicated.
- .3 Edges:
  - .1 For surfaces to be finished with joint compound: Tapered.
  - .2 For unfinished surfaces: Square.
- .4 Ends: Square.

.2 Gypsum Board to ASTM C 1396/C 1396M:
- .1 Standard gypsum board unless otherwise indicated.
- .2 Fire resistant gypsum board: Type X where required for fire-resistance-rated assemblies.
- .3 Moisture resistant (MR) board: Provide MR board in selected rooms where indicated.

.3 Exterior Grade Glass-Mat, Water-Resistant Gypsum Backing Board to ASTM C1177:
- .1 Proprietary gypsum board with silicone treated core and fibreglass mat face and back, face side surfaced with heat cured copolymer water and vapour retardant coating, thickness as indicated, square ends and edges.
- .2 Standard of acceptance: DensGlass Sheathing by Georgia-Pacific.
- .3 Acceptable Alternate: GlasRoc Sheathing Board by CertainTeed Gypsum. Compliant to ASTM C1177.

.4 Cement Board: Cementitious fibre-matt reinforced tile backer board to ASTM C1325, Thickness 13mm.
- .1 Standard of acceptance: Pemabase cement board by Unifix Inc.

2.2 STEEL FRAMING AND FURRING COMPONENTS

.1 General: Provide components complying with ASTM C754 for conditions indicated. Fabricate sheet steel products from Galvanized steel sheet to ASTM A653M with Z 180 hot-dipped galvanized finish.

.2 Anchors and Fasteners: Anchors and fastener of types suitable for the applications indicated, fabricated from corrosion-resistant materials, with clips or other accessory devices for attaching hangers, and with the capability to sustain, without failure and with a safety factor acceptable to the authorities having jurisdiction, the load imposed by ceiling construction and items supported by the ceiling.

.3 Wire Ties: ASTM A641/A641M, Class 1 zinc coating, soft temper, 1.6 mm thick.

.4 Hangers: As required by loading conditions and fire resistant design requirements to the satisfaction of the authorities having jurisdiction, one or more of the following:3
- .1 Wire hangers: ASTM A641M, Class 1 zinc coating, soft temper, 4.1 mm diameter.
- .2 Hanger Rods: Mild steel and zinc coated.
- .3 Flat Hangers: Mild steel and zinc coated.

.5 Channels: Cold-rolled steel, 1.5 mm (16 ga) minimum base metal (uncoated) thickness and 11 mm wide flanges. Sizes as required by loading conditions and fire resistant design requirements.

.6 Steel Studs for Furring Channels: ASTM C645, 0.45 mm base metal thickness, unless otherwise indicated or required by loading conditions. Depth as indicated and as required by loading conditions.

.7 Steel Furring Channels:
- .1 Rigid: ASTM C645, hat shaped, depth of 22 mm, and minimum thickness of base (uncoated) metal of 0.45 mm (26 ga), unless otherwise indicated or required by loading conditions.
- .2 Resilient: Manufacturer's standard product designed to reduce sound transmission, fabricated from steel sheet complying with ASTM A653M or ASTM A568M to form 13 mm deep channel of single- or double-leg configuration: asymmetric-shaped channel with face connected to a single flange by a single-slotted leg (web) or hat-shaped channel, with 38 mm wide face connected to flanges by double-slotted or expanded-metal legs (webs).

2.3 TRIM ACCESSORIES

.1 Accessories for Interior Installation: Cornerbead, edge trim, and control joints complying with ASTM C 1047 and requirements indicated below:
- .1 Material: Formed steel sheet zinc coated by hot-dip or electrolytic process.
- .2 Shapes as required in accordance with ASTM C1047.
  - .1 LC-bead with both face and back flanges; face flange formed to receive joint compound. Use LC-beads for edge trim, unless otherwise indicated.
  - .2 L-bead with face flange only; face flange formed to receive joint compound. Use L-bead where indicated.
  - .3 One-piece control joint formed with V-shaped slot and removable strip covering slot opening.
  - .4 Note that standard "U" bead (J trim) is not acceptable. Use "L" bead that is concealed when taped and filled.

2.4 JOINT TREATMENT MATERIALS

.1 General: Provide joint treatment materials complying with ASTM C475 and the recommendations of both the manufacturers of sheet products and of joint treatment materials for each application indicated.

.2 Joint Tape for Standard Gypsum Board: Paper reinforcing tape as recommended by the gypsum board manufacturer.

.3 Joint Tape for Water Resistant Board: Fiberglass reinforcing mesh tape as recommended by the gypsum board manufacturer.

.4 Joint Compound for Gypsum Board: Factory-mixed, all-purpose compound formulated for both taping and topping compound.

.5 Joint Compound for Water Resistant Board: Factory-mixed, latex fortified compound formulated for both taping and topping compound.

2.5 MISCELLANEOUS MATERIALS

.1 General: Provide auxiliary materials for gypsum drywall construction which comply with referenced installation standards and the recommendations of the manufacturer of the gypsum board.

.2 Laminating adhesive: Adhesive or joint compound recommended for directly adhering gypsum boards to continuous substrates.

.3 Spot grout: ASTM C475, setting type joint compound of type recommended for spot grouting hollow metal door frames.

.4 Steel drill screws complying with ASTM C1002 for the following applications:

.5 Fastening gypsum board to steel members less than 0.76 mm thick.

.6 Fastening gypsum board to gypsum board.

.7 Steel drill screws complying with ASTM C954 for fastening gypsum board to steel members from 0.83 mm to 2.8 mm thick.

.8 Water: All water used in joint system shall be clean and free from deleterious amounts of foreign material.

.9 Sealants: in accordance with Section 07 92 00.

.10 Other Materials: All other materials not specifically described but required for a complete and proper installation of gypsum drywall shall be as selected by the Contractor, subject to approval by the Consultant

PART 3 Execution

3.1 EXAMINATION

.1 Examine areas and conditions under which work is to be performed and notify the Consultant in writing of conditions detrimental to the proper and timely completion of the work.

.2 Examine substrates to which gypsum board assemblies attach or abut, installed hollow metal frames, cast in anchors, and structural framing, with Installer present, for compliance with requirements for installation tolerances and other conditions affecting performance of assemblies specified in this Section.

.3 Do not proceed with the work until unsatisfactory conditions have been corrected to the satisfaction of the installer.

.4 Commencement of the installation will be construed as acceptance of the site conditions and, thereafter, the Contractor shall be fully responsible for satisfactory work as specified herein.

3.2 COORDINATION

.1 Examine the mechanical and electrical drawings and coordinate with appropriate other trades to

establish openings, additional support, furring out and other special provisions required for mechanical and electrical fixtures and fittings and access hatches built into the work of this Section.

.2 Examine the architectural drawings and coordinate with appropriate other trades to establish openings, additional support and other special provisions required for items built into or partially supported by the work of this Section.

3.3 EXTRA MATERIALS

.1 Provide manufacturer's instructions in accordance with Section 01 78 00 - Closeout Submittals covering maintenance requirements and parts catalogue, with cuts and identifying numbers.

3.4 CEILING ANCHORAGES

.1 Coordinate installation of ceiling suspension systems with installation of overhead structural assemblies to ensure that inserts and other provisions for anchorages to building structure have been installed to receive ceiling hangers that will develop their full strength and at spacing required to support ceilings.

3.5 INSTALLATION STEEL FRAMING, GENERAL

.1 Steel Framing Installation Standard: Install steel framing to comply with ASTM C754 and with ASTM C840 requirements that apply to framing installation.

.2 Install supplementary fire treated wood framing, blocking, and bracing at terminations in the work and for support of fixtures, equipment services, heavy trim, grab bars, toilet accessories, furnishings, and similar construction to comply with details indicated and with recommendations of gypsum board manufacturer, or if none available, with "Gypsum Construction Handbook" published by CGC.

.3 Do not bridge building expansion and control joints with steel framing or furring members. Independently frame both sides of joints with framing of furring members or a indicated.

.4 Isolate steel framing from building structure at locations indicated to prevent transfer of loading imposed by structural movement. Comply with details shown on Drawings.

3.6 INSTALLATION STEEL FRAMING FOR SUSPENDED AND FURRED CEILINGS AND BULKHEADS

.1 Screw furring members to metal framing.

.2 Suspend ceiling hangers from building structural members and as follows:

.1 Install hangers plumb and free from contact with insulation or other objects within ceiling plenum that are not part of supporting structural or ceiling suspension system. Splay hangers only where required to miss obstructions and offset resulting horizontal forces by bracing, countersplaying, or other equally effective means.

.2 Where width of ducts and other construction within ceiling plenum produces hanger spacings that interfere with the location of hangers required to support standard suspension system members, install supplemental suspension members and hangers in form of trapezes or equivalent devices. Size supplemental suspension members and hangers to support ceiling loads within performance limits established by referenced standards.

.3 Secure wire hangers by looping and wire tying, either directly to structures or to inserts, eyescrews, or other devices and fasteners that are secure and appropriate for substrate, and in a manner that will not cause them to deteriorate or otherwise fail due to age, corrosion, or

elevated temperatures.

.4 Secure flat, angle, channel, and rod hangers to structure, including intermediate framing members, by attaching to inserts, eyescrews, or other devices and fasteners that are secure and appropriate for structure, as well as for type of hanger involved, and in a manner that will not cause them to deteriorate or fail due to age, corrosion, or elevated temperatures.

.5 Do not attach hangers to steel deck tabs.

.6 Do not attach hangers to steel roof deck. Attach hangers to structural members.

.7 Do not connect or suspend steel framing from ducts, pipes or conduit.

.8 Sway brace suspended steel framing with hangers used for support.

.3 Install suspended steel framing components in sizes and at spacings indicated but not less than that required by the referenced steel framing installation standard.

.1 Wire Hangers: 4.1 mm (8 ga) diameter, 1200 mm o.c.

.2 Carrying Channels (Main Runners): 38 mm, 1200 mm o.c.

.3 Rigid Furring Channels (Furring Members): 400 mm o.c.

.4 Rigid Furring Channels (Furring Members): 600 mm o.c.

.4 Installation Tolerances: Install steel framing components for suspended ceilings so that cross furring members or grid suspension members are level to within 3 mm inch in 3600 mm as measured both lengthwise on each member and transversely between parallel members.

.5 Wire tie or clip furring members to main runners and to other structural supports as indicated.

.6 Grid Suspension System: Attach perimeter wall track or angle where grid suspension system meets vertical surfaces. Mechanically join main beam and cross furring members to each other and butt cut to fit into wall track.

3.7 SHAFTWALL CONSTRUCTION

.1 Install C-H studs and liner panels progressively between J-runners attached to the floor and underside of deck above.

.2 Space C-H studs at 600 mm o.c. and insert gypsum board edges into studs.

.3 Finish the exterior side of the assembly with gypsum board as specified for standard stud assembly.

3.8 APPLICATION AND FINISHING OF GYPSUM BOARD, GENERAL

.1 Gypsum Board Application and Finishing Standards: Install and finish gypsum board to comply with ASTM C840 and GA 216.

.2 Install sound attenuation blankets where indicated, prior to gypsum board unless readily installed after board has been installed on one side.

.3 Locate exposed end butt joints as far from centre of walls and ceilings as possible and stagger not less than 600 mm in alternate courses of board.

.4 Install ceiling boards across framing in the manner which minimizes the number of end butt joints and which avoids end joints in the central area of each ceiling. Stagger end joints at least 600 mm, but not less than one framing member.

.5 Install wall/partition boards in manner which minimizes the number of end butt joints or avoids them entirely where possible. At stairwells and similar high walls, install boards horizontally with end joints staggered over studs. Gypsum boards shall extend tight to floors and ceilings with no gaps.

.6 Install abuse-resistant board from floor level to 1200 mm above floor level on all walls and partitions.

.7 Install exposed gypsum board with face side out. Do not install imperfect, damaged, or damp boards. Butt boards together for a light contact at edges and ends with not more than 1/16 inch open space between boards. Do not force into place.

.8 Locate either edge or end joints over supports, except in horizontal applications where intermediate supports or gypsum board back blocking is provided behind end joints. Position boards so that like edges abut, tapered edges against tapered edges and mill cut or field cut ends against mill cut or field cut ends. Do not place tapered edges against cut edges or ends. Stagger vertical joints over different studs on opposite sides of partitions.

.9 Attach gypsum board to steel studs so that leading edge or end of each board is attached to open (unsupported) edge of stud flanged first.

.10 Attach gypsum board to supplementary framing and blocking provided for additional support at openings and cutouts.

.11 Form control joints and expansion joints at locations indicated, with space between edges of boards, prepared to receive trim accessories. If not shown on Drawings, control joints shall be installed as follows, in locations as approved by the Consultant:

- .1 A control joint shall be installed where a partition, wall, or ceiling traverses a construction joint (expansion, seismic, or building control element) in the base building structure.
- .2 Control joints shall be installed where a wall or partition runs in an uninterrupted straight plane exceeding 9 linear metres.
- .3 Control joints in interior ceilings with perimeter relief shall be installed so that linear dimensions between control joints do not exceed 15 m and total area between control joints does not exceed 232 m2.
- .4 Control joints in interior ceilings without perimeter relief shall be installed so that linear dimensions between control joints do not exceed 9 m and total area between control joints does not exceed 83 m2.
- .5 A control joint or intermediate blocking shall be installed where ceiling framing members change direction.

.12 Where a control joint occurs in an acoustical or firerated system, blocking shall be provided behind the control joint by using a backing material consisting of 16 mm type X gypsum board.

.13 Isolate perimeter of non load bearing drywall partitions at structural abutments. Provide 6 mm to 13 mm space and trim edge with "U" bead edge trim. Seal joints with acoustical sealant.

.14 Where STC-rated gypsum board assemblies are indicated, seal construction at perimeters, control and expansion joints, openings and penetrations with a continuous bead of acoustical sealant including a bead at both faces of partitions. Comply with ASTM C 919 and manufacturer's recommendations for location of edge trim and close off sound flanking paths around or through construction, including sealing of partitions above acoustical ceilings.

.15 Space fasteners in gypsum boards in accordance with referenced gypsum board application and finishing standard and manufacturer's recommendations.

3.9 INSTALLATION GYPSUM BOARD

.1 Single layer application: Install gypsum wallboard as follows:
- .1 On ceilings, apply gypsum board prior to wall/partition board application to the greatest extent possible, and at right angles to framing, unless noted otherwise.
- .2 On partitions/walls apply abuse-resistant gypsum board horizontally for the first 1200 mm above floor level and then continue up the wall with regular gypsum board. Provide sheet lengths which will minimize end joints.

.2 Multi layer application: Install gypsum backing board for base layer and gypsum wallboard for face layer.
- .1 On ceilings, apply base layer prior to applying base layer on walls/partitions; apply face layers in same sequence. Offset face layer joints one framing member, but not less than 400 mm from parallel base layer joints. Apply base layers at right angles to framing members unless otherwise indicated.
- .2 On partitions/wall, apply base layer and face layers vertically (parallel to framing) with joints of base layer over supports and face layer joints offset at least, one stud or furring member, not less than 250 mm with base layer joints.
- .3 On Z furring members, apply base layer vertically (parallel to framing) and face layer either vertically (parallel to framing) or horizontally (perpendicular to framing) with vertical joints offset at least one furring member. Locate edge joints of base layer over furring members.

.3 Single layer fastening methods: Apply gypsum boards to supports with steel drill screws.

.4 Multi layer fastening methods: Apply base layer of gypsum board and face layer to base layer as follows:
- .1 Fasten both base layers and face layers separately to supports with screws.

.5 Direct bonding (laminating) to substrate: Where gypsum panels are indicated as directly adhered to a substrate (other than studs, joists, furring members or base layer of gypsum board), comply with gypsum board manufacturer's recommendations, and temporarily brace or fasten gypsum panels until fastening adhesive has set.

.6 Install gypsum wallboard panels with tapered edges taped and finished to produce a flat surface except at showers, tubs, and other locations indicated to receive water resistant panels.

.7 Wall tile substrates: For substrates indicated to receive thin set ceramic tile and similar rigid applied wall finishes, comply with the following:
- .1 Install water resistant tile backer board panels at showers, tubs, and where indicated] to receive tile.
- .2 Tile backing panels: Glass mat, water resistant backing panel: Comply with manufacturer's written installation instructions and install at showers, tubs, and where indicated in locations indicated to receive tile. Install with 6 mm gap where panels abut other construction or penetrations.
- .3 Areas not subject to wetting: Install standard gypsum wallboard panels to product a flat surface except at showers, tubs, and other locations to receive water resistant panels.
- .4 Where tile backing panels abut other types of panels in the same plane, shim surface to produce a uniform plane across panel surfaces.

3.10 INSTALLATION GYPSUM BOARD TRIM

.1 General: Where feasible, use the same fasteners to anchor trim accessory flanges as required to fasten gypsum board to the supports. Otherwise, fasten flanges to comply with manufacturer's recommendations.

.2 Install corner beads at external corners.

.3 Install edge trim where edge of gypsum panels would otherwise be exposed or semi exposed. Provide edge trim type with face flange formed to receive joint compound except where other types are indicated.

.4 Install edge trim where edge of gypsum board would otherwise be exposed or semi exposed. Provide edge trim type with face flange to receive joint compound except where other types are indicated.
- .1 Install "LC" bead where gypsum panels are tightly abutted to other construction and back flange can be attached to framing or supporting substrate.
- .2 Install "L" bead where edge trim can only be installed after gypsum board is installed.
- .3 Install U type trim where edge is exposed, revealed, gasketted, or sealant filled (including expansion joints).

.5 Install specified extruded aluminum trim where indicated.

3.11 CEMENT BACKER BOARD INSTALLATION

.1 Install cement backer board in accordance with the manufacturer's recommendations and to the satisfaction of the ceramic tile installer.

.2 Install boards with the long dimension horizontal and the rough side out.

.3 Do not butt or align board edges with corners of openings or joints in the substrate.

.4 Precut boards to required sizes and make necessary cutouts. Separate ends and edges by a 1.6mm to 3.2 mm gap.

.5 Allow a 13mm space for expansion joints and a 6mm space for sealant at all termination points and openings.

.6 Stagger vertical joints and ensure that all board edges and ends are supported by framing member. Install additional framing members if necessary.

.7 Fasten boards to steel studs and/or supplementary steel framing members with 32mm steel screws at 200 o.c. vertically and 400 mm o.c. horizontally around the perimeter and in the field.

.8 Countersink fastener heads flush with the board surface.

.9 Replace loose or improperly installed fasteners.

.10 Prefill panel joints, and joints where panels abut other surfaces such as gypsum board, with tile setting mortar or adhesive and then immediately embed joint tape and level the joints. Coordinate with the ceramic tile installer to ensure compatibility of joint treatment material.

3.12 FINISHING OF GYPSUM BOARD ASSEMBLIES

.1 General: Apply joint treatment at gypsum board joints (both directions), flanges of corner bead, edge

trim, and control joints, penetrations, fastener heads, surface defects and elsewhere as required to prepare work for decoration and level of gypsum board finish indicated.

.1 Prefill open joints, rounded or bevelled edges, and damaged areas, using setting type joint compound.

.2 Apply joint tape over gypsum board joints except those with trim accessories having concealed face flanges not requiring taping to prevent cracks from developing in joint treatment at flange edges.

.2 Levels of Gypsum Board Finish: Provide the following levels of gypsum board finish per GA-214.

.1 Level 1 for ceiling plenum areas, concealed areas, except where a higher level of finish is required for fire resistive rated assemblies and sound rated assemblies or where a higher level is specified or indicated.

.2 Level 2 where water resistant gypsum backing board panels form substrates for tile, and where indicated.

.3 Level 4 for gypsum board surfaces indicated to receive light textured finishes, wallcoverings, and flat paints over light textures.

.4 Level 4 for gypsum board surfaces indicated to receive gloss and semi-gloss enamels, nontextured flat paints, and where indicated.

.5 Level 5 for gypsum board exposed ceilings to receive paint, or wall surfaces indicated to receive graphic wall covering murals.

.3 For Level 4 gypsum board finish, embed tape in finishing compound plus two separate coats applied over joints, angles, fastener heads, and trim accessories using one of the following combinations of joint compounds (not including prefill), and sand between coats and after last coat.

.4 Where Level 5 gypsum board finish is indicated, apply joint compound combination specified for Level 4 plus a thin, uniform skim coat of joint compound over entire surface. Use joint compound specified for the finish (third coat) or a product specially formulated for this purpose and acceptable to gypsum board manufacturer. Produce surfaces free of tool marks and ridges ready for decoration of type indicated.

.5 Where Level 2 gypsum board finish is indicated, apply joint specified for first coat in addition to embedding coat.

.6 Where Level 1 gypsum board finish is indicated, apply joint compound specified for embedding coat.

.7 Allow not less than 24 hours drying time between coats.

.8 Glass Mat Gypsum Interior Wall Panel:

.1 Finish according to manufacturer's written instructions for use in interior applications.

3.13 SPRAY APPLIED SKIM COAT PRIMER SURFACER APPLICATION

.1 Preparation:

.1 General:

.1 Remove hardware and hardware accessories, plates, machined surfaces, light fixtures, and similar items already installed that are not to be coated.

.2 If removal is impractical or impossible because of size or weight of item, provide surface applied protection before surface preparation and coating.

.3 After completing coating operations in each area, reinstall items removed using workers skilled in trades involved.

.2 Cleaning: Before applying coatings or other surface treatments, clean substrates of substances that could impair bond of coating systems. Remove oil and grease before cleaning.

.1 Schedule cleaning and coating application so dust and other contaminants from cleaning operations will not fall on wet, newly coated surfaces.

.3 Surface Preparation: Clean and prepare surfaces to be coated according to the manufacturer's written instructions for the particular substrate conditions, and as specified.

.1 Gypsum Board Preparation:

.1 Treat joints and fastener heads in accordance with U.S. Gypsum instructions for a minimum Level 4 wallboard finish.

.2 Fill and smooth scratches and scuffs in gypsum board surfaces.

.3 Allow gypsum board joint treatment and fillers to thoroughly dry before application

.2 Install sealant in joints. Refer to Section 07 92 00.

.3 Material Preparation: Carefully mix and prepare materials according to the manufacturer's written instructions.

.2 Application:

.1 General: Apply finish to exposed surfaces indicated.

.1 Primer Surfacer Application: Mix and apply finish to gypsum panels indicated to receive finish according to finish manufacturer's directions. Using power spray equipment acceptable to finish manufacturer, produce a uniform thickness, free of starved spots, pin holes, or other evidence of thin application or of application patterns, and free of excessive globules.

.2 Prevent spray applied finishes from coming into contact with surfaces not indicated to receive texture finish by covering them with masking agents, polyethylene film, or other means. If despite these precautions, finishes contact these surfaces, immediately remove droppings and overspray as recommended by finish manufacturer to prevent damage.

.3 Colour to be White.

.2 Minimum Coating Thickness: Apply each material at not less than the manufacturer's recommended spreading rate. Provide total cured material thickness indicated or as recommended by the manufacturer.

3.14 ACCESS DOORS

.1 Install access doors to electrical and mechanical fixtures and electrical panelboards specified in respective Sections.

.2 Rigidly secure frames to furring or framing systems.

3.15 ACOUSTICAL PARTITION PERIMETERS

.1 Minimize gaps between gypsum board and adjacent constructions and partition perimeters. Gaps greater than 13 mm wide are unacceptable.

.2 Gaps between 6 mm and 13 mm to be packed with back-up rod and caulked with acoustical sealant specified in Section 07 92 00 "Joint Sealants". Gaps below 6 mm do not require back-up rod.

.3 Apply acoustical sealant to the first layer of gypsum board and arrange for review by the Consultant before application of the second layer of gypsum board.

.4 Cut drywall neatly and tight around all penetrations at STC rated walls. Provide fitted drywall flanges around all mechanical penetrations. Complete drywall flange by caulking full perimeter to penetrations and adjacent gypsum board. Caulking to be reviewed by the Consultant before concealing.

.5 Stagger electrical outlets or mechanical installations on opposing sides of STC rated walls. Ensure sound attenuation insulation runs behind all penetrations. All electrical outlets to have vapour hoods and cover plate gaskets.

3.16 STC RATED PARTITIONS

.1 A minimal amount of studs should be installed per wall. (additional studs Should be installed)

.2 Inner and outer layers of drywall should have no gaps over 6mm between Sheets.

.3 Inner layers of drywall should be taped but do not require sanding.

.4 Drywall joints must be staggered between layers.

.5 Fire rated caulking should be used as the primary sealant.

.6 All layers of drywall must be sealed around entire perimeter with fire

.7 Rated caulking around the entire perimeter.

.8 Electrical boxes on opposing faces of the wall should be located in separate stud cavities.

.9 All electrical services in party walls should have back boxes.

.10 Fiberglass or mineral fiber batt should be run behind and around all electrical boxes.

.11 Fiberglass or mineral fiber batt should not be compressed when running behind services and boxes. Cut the batt around services.

.12 All penetrations through rated walls must be sealed air-tight with a combination of joint compound and caulking.

.13 No drywall is to pass through wall junctions. Drywall is to be broken (separated) at tees, cross and corner junctions.

.14 Door frame and floor under any doors with sealing system must be level 1.6mm. Provide Floor leveler as required. Verify before Drywall and doors are installed.

3.17 CLEANING

.1 Progress Cleaning: Leave Work area clean at end of each day.

.2 Final Cleaning: upon completion remove surplus materials, rubbish, tools and equipment.

3.18 PROTECTION

.1 Protect installed products and components from damage during construction.

.2 Repair damage to adjacent materials caused by gypsum board assemblies installation.

END OF SECTION

PART 1 General

1.1 REFERENCES

.1 American Society for Testing and Materials International, (ASTM).
- .1 ASTM C 645, Specification for Nonstructural Steel Framing Members.
- .2 ASTM C 754, Specification for Installation of Steel Framing Members to Receive Screw-Attached Gypsum Panel Products.

.2 Canadian General Standards Board (CGSB).
- .1 CAN/CGSB-1.40, Primer, Structural Steel, Oil Alkyd Type.

1.2 DESIGN REQUIREMENTS

.1 Design Non-Structural Metal Stud Framing to resist effects of earthquake motions under seismic design conditions for Post Disaster buildings as specified in the Contract Documents and specifically on drawing S000 item D01-3 SEISMIC SYSTEM/LOADING DATA. Provide components as necessary to implement the design.

1.3 ACTION AND INFORMATIONAL SUBMITTALS

.1 Product Data:
- .1 Submit manufacturer's instructions, printed product literature and data sheets for metal studs and include product characteristics, performance criteria, physical size, finish and limitations.

.2 Shop Drawings:
- .1 Submit drawings stamped and signed by professional engineer registered or licensed in Province of Ontario, Canada, specifically for details pertaining to seismic restraint, general bracing and restraint and framing of high walls over 2.5m.
- .2 Indicate design loads, member sizes, materials, design thickness exclusive of coatings, coating specifications, connection and bracing details, screw sizes and spacing, and anchors.
- .3 Indicate locations, dimensions, openings and requirements of related work.
- .4 Indicate welds by welding symbols as defined in CSA W59.

.3 Samples:
- .1 Submit 300 mm long samples of each type of framing components for review upon request.

1.4 QUALITY ASSURANCE

.1 Test Reports: certified test reports showing compliance with specified performance characteristics and physical properties.

.2 Certificates: product certificates signed by manufacturer certifying materials comply with specified performance characteristics and criteria and physical requirements.

.3 Pre-Installation Meetings: conduct pre-installation meeting to verify project requirements, manufacturer's installation instructions and manufacturer's warranty requirements.

PART 2 Products

2.1 MATERIALS

.1 Non-load bearing channel stud framing: to ASTM C 645-81, roll formed from 0.91 mm thickness hot dipped galvanized steel sheet, for screw attachment of gypsum board. Knock-out service holes at 460 mm centres. Stud sizes as indicated on

.2 Non-load bearing channel stud framing: to ASTM C 645-81, roll formed from 0.91 mm thickness hot dipped galvanized steel sheet, for screw attachment of gypsum board. Knock-out service holes at 460 mm centres. Stud sizes as indicated on

.3 Shaft wall construction:
- .1 Non-loadbearing C-H stud framing to ASTM C645, roll-formed from 0.53 mm galvanized sheet steel, 64 mm stud size., Type S drywall screws.
- .2 Floor and ceiling runners: J-runners to ASTM C645, widths to suit stud sizes.

.4 Metal channel stiffener: 25 x 50 mm size, 1.4 mm thick cold rolled steel, coated with rust inhibitive coating.

.5 Acoustical sealant: to Section 07 92 00.

.6 Isolating strip: rubberized, moisture resistant 3 mm thick foam strip, 12 mm wide, with self-sticking adhesive on one face, lengths as required.

.7 Screws: shall be purpose made for application to CSA A82.31-M1980, pan head, self-drilling, self-tapping sheet metal screws, corrosion protected with minimum zinc coating thickness of 0.008 mm, and min. length 25 mm.

PART 3 EXECUTION

3.1 ERECTION

.1 Align partition tracks at floor and ceiling and secure at 600 mm on centre maximum.

.2 Install damp proof course under stud shoe tracks of partitions on slabs on grade.

.3 Place studs vertically at 400 mm on centre and not more than 50 mm from abutting walls, and at each side of openings and corners. Position studs in tracks at floor and ceiling. Cross brace steel studs as required to provide rigid installation to manufacturer's instructions.

.4 Erect metal studding to tolerance of 1:1000.

.5 Attach studs to bottom & ceiling tracks using screw method.

.6 Co-ordinate simultaneous erection of studs with installation of service lines. When erecting studs ensure web openings are aligned.

.7 Co-ordinate simultaneous erection of studs with installation of service lines. When erecting studs ensure web openings are aligned.

.8 Provide two or more studs extending from floor to ceiling at each side of openings wider than stud centres specified. Secure studs together, 50 mm apart using column clips or other approved means of

fastening placed alongside frame anchor clips.

.9 Install heavy gauge single jamb studs at openings

.10 Erect track at head of door/window openings and sills of sidelight/window openings to accommodate intermediate studs. Secure track to studs at each end, in accordance with manufacturer's instructions. Install intermediate studs above and below openings in same manner and spacing as wall studs.

.11 Frame openings and around built-in equipment, cabinets, access panels, on four sides. Extend framing into reveals. Check clearances with equipment suppliers.

.12 Provide 40 mm stud or furring channel secured between studs for attachment of fixtures behind lavatory basins, toilet and bathroom accessories, and other fixtures including grab bars and towel rails, attached to steel stud partitions.

.13 Install steel studs or furring channel between studs for attaching electrical and other boxes.

.14 Extend partitions to height noted on drawings.

.15 Maintain clearance under beams and structural slabs to avoid transmission of structural loads to studs. Use 50 mm leg ceiling tracks. Use double track slip joint as indicated.

.16 Install continuous isolating strips to isolate studs from uninsulated surfaces.

.17 Install two continuous beads of acoustical sealant under studs and tracks around perimeter of sound control partitions.

.18 Extend studs vertically and tie to structure to provide lateral stability.

.19 Frame all openings in fire rated partitions, inclusive of mechanical and electrical openings, to ULC-G21, Figures 4, 5, 6, 7, 8 and 15, ULC CR 1255, Figures 1 and 2, and ULC Certification Bulletin #80-5.

3.2 CLEANING

.1 Upon completion of installation, remove surplus materials, rubbish, tools and equipment barriers.

END OF SECTION

PART 1 General

1.1 REFERENCES

.1 American National Standards Institute (ANSI)/Ceramic Tile Institute (CTI)
- .1 ANSI A108.1, Specification for the Installation of Ceramic Tile
- .2 CTI A118.3 Specification for Chemical Resistant, Water Cleanable Tile Setting and Grouting Epoxy and Water Cleanable Tile Setting Epoxy Adhesive
- .3 CTI A118.4, Specification for Latex Cement Mortar
- .4 CTI A118.5, Specification for Chemical Resistant Furan Resin Mortars and Grouts for Tile Installation
- .5 CTI A118.6, Specification for Ceramic Tile Grouts

.2 American Society for Testing and Materials International (ASTM)
- .1 ASTM C 144, Specification for Aggregate for Masonry Mortar.
- .2 ASTM C 207, Specification for Hydrated Lime for Masonry Purposes.

.3 Canadian General Standards Board (CGSB)
- .1 CAN/CGSB-51.34, Vapour Barrier, Polyethylene Sheet for Use in Building Construction.
- .2 CGSB 71-GP-22M, Adhesive, Organic, for Installation of Ceramic Wall Tile.
- .3 CAN/CGSB-75.1, Tile, Ceramic.
- .4 CAN/CGSB-25.20, Surface Sealer for Floors.

.4 Terrazzo Tile and Marble Association of Canada (TTMAC)
- .1 Tile Specification Guide 09 30 00, Tile Installation Manual.
- .2 Tile Maintenance Guide

1.2 QUALIFICATIONS

.1 Installers shall have a minimum of 10 years documented successful experience in the installation of ceramic on commercial projects of a similar nature to this project.

.2 Employ only skilled tradesmen who are experienced in this work.

.3 If requested by the Consultant, provide evidence of previously completed projects of a similar nature.

1.3 ACTION AND INFORMATIONAL SUBMITTALS

.1 Provide submittals in accordance with Section 01 33 00.

.2 Provide product data in accordance with Section 01 33 00.
- .1 Include manufacturer's information on:
  - .1 Ceramic tile, marked to show each type, size, and shape required.
  - .2 Chemical resistant mortar and grout (Epoxy and Furan).
  - .3 Cementitious backer unit.
  - .4 Dry-set cement mortar and grout.
  - .5 Divider strip.
  - .6 Elastomeric membrane and bond coat.
  - .7 Reinforcing tape.
  - .8 Levelling compound.
  - .9 Latex cement mortar and grout.
  - .10 Commercial cement grout.

.11 Organic adhesive.
.12 Slip resistant tile.
.13 Waterproofing isolation membrane.
.14 Fasteners.
.15 Trim and expansion joint.

.3 Provide samples in accordance with Section 01 33 00.
.1 Submit duplicate, 300 x 300 mm sample panels of each colour, texture, size, and pattern of tile.
.2 Submit samples of metal Trim and connectors for each type proposed for use.
.3 Adhere tile samples to 11 mm thick plywood and grout joints to represent project installation.

1.4 QUALITY ASSURANCE

.1 Quality Assurance Submittals:
.1 Manufacturer's Instructions: manufacturer's installation instructions.
.2 Manufacturer's Field Reports: manufacturer's field reports specified.

1.5 DELIVERY, STORAGE AND HANDLING

.1 Packing, shipping, handling and unloading:
.1 Deliver, store and handle materials in accordance with Section 01 61 00.

.2 Deliver, store and handle products in a manner to avoid damage or contamination.

.3 Have materials delivered to job site prior to installation.

.4 Deliver all products to job site in manufacturer’s unopened cartons with all labels intact and legible.

.5 Keep cartons dry and protect from vandalism and away from heavy traffic area.

.6 Store cartons in upright position.

1.6 AMBIENT CONDITIONS

.1 Maintain air temperature and structural base temperature at ceramic tile installation area above 12 degrees C for 48 hours before, during, and 48 hours after, installation.

.2 Do not install tiles at temperatures less than 12 degrees C or above 38 degrees C.

.3 Do not apply epoxy mortar and grouts at temperatures below 15 degrees C or above 25 degrees C.

.4 Do not install flooring until moisture tests and pH tests have been performed and conditions meet Manufacturer's recommendations. Testing to be carried out every 100 m^2. Test results to be provided in writing to the Consultant and the material Supplier. Notify the Consultant immediately if any test results are in excess of the Manufacturer's recommendations.

.5 Avoid static loads, rolling loads, and heavy foot traffic until adhesive has thoroughly set.

1.7 MAINTENANCE

.1 Extra Materials:
.1 Provide maintenance materials in accordance with Section 01 78 00.
.2 Provide minimum 2% of each type and colour of tile required for project for maintenance use.

Store where directed.

.3 Maintenance material same production run as installed material.

PART 2 Products

2.1 MANUFACTURERS

.1 The surface preparation materials, setting bed, and grout specifications is based on products by TEC inc. and H.B. Fuller Company, by Centura.

2.2 TILE

.1 Ceramic tile: to CAN/CGSB-75.1 as selected by Consultant.

.2 PCT-01 – General Floor Tile:
- .1 305mm x 610mm Porcelain Tile
- .2 Standard of Acceptance: Lea Stone by Olympia Tile, colour: dark grey, Finish: matte.

.3 PCT-01b – Wall base Tile:
- .1 100mm x 610mm Porcelain Tile
- .2 Standard of Acceptance: Lea Stone by Olympia Tile, colour: dark grey, Finish: matte.
- .3 Schluter wall trim

.4 PCT-02 – Floor Tile in Shower Area:
- .1 50mm x 50mm dot mounted Porcelain Mosaic with cove base accessory tile.
- .2 Standard of Acceptance: Quebec Series Mosaic Tile by Olympia Tile, colour: Graphite, sheet size 303mm x 504.

.5 PCT-03 – General Wall Tile:
- .1 305mm x 610mm porcelain tile
- .2 Standard of Acceptance: Lea Stone by Oympia Tile, colour: Light Grey, Finish: matte.

.6 PCT-04 - Accent tile:
- .1 Glazed Wall Tile
- .2 100mm x 400mm
- .3 Standard of Acceptance: Colour & Dimension Collection by Olympia Tile, colour: Citron Bright

.7 PCT-05 - Accent tile:
- .1 Glazed Wall Tile
- .2 100mm x 400mm
- .3 Standard of Acceptance: Colour & Dimension Collection by Olympia Tile, colour: Red Pepper Bright.

.8 Neatly cut and grind edges of tiles as required, at bases and at edges at exposed perimeters of tiling.

.9 All cut edges shall be machine-cut and arises (edges) shall be ground and bevelled to match manufactured edges.

2.3 SURFACE PREPARATION MATERIALS

.1 Levelling compound: H.B. Fuller TA305 Deep Set Patch (Centura).

.2 Self Leveling and build up 20mm or less:

.1 H.B. Fuller TA323 EZ.LEVEL Powder
.2 H.B. Fuller TA560 Multi-Primer Primer.

2.4 SETTING MORTARS AND ADDITIVES

.1 Floor: TEC 3N1 Mortar to ANSI A118.4.

.2 Wall:
.1 Ceramic Tile: TEC 390, full flex. Mortar to ANSI A118.4 112.
.2 Glass Tile: Superflex Mortar TEC 393, white.

2.5 GROUTS AND ADDITIVES

.1 Grout (to ANSI A118.7): TEC Power Grout as manufactured by H.B. Fuller Construction Products Inc, or acceptable equal.

2.6 ACCESSORIES AND TRIM

.1 Purpose-made tile edge trim, profile to suit application complete with connectors and end stops. Standard of Acceptance: Tile trim by Schluter Systems (Canada) Inc, as follows:
.1 Floor Control Joints as recommended by ceramic manufacturer: DILEX AKSN 125 G.
.2 All exposed tile edges and against framing: Jolly AT satin finish, height to suite tile height.
.3 TT4 – Flush Transition from Ceramic tile to resilient flooring: Reno-U AT, height to suite tile height.

2.7 CLEANING COMPOUNDS

.1 Specifically designed for cleaning masonry and concrete and which will not prevent bond of subsequent tile setting materials including patching and levelling compounds and elastomeric waterproofing membrane and coat.

.2 Materials containing acid or caustic material are not acceptable.

2.8 SHOWER WALLS AND FLOORS (WATERPROOF ASSEMBLY)

.1 Lifetime System Water Proofing: H.B.Fuller TEC. Follow Manufacturers written instructions.
.1 Hydraflex Liquid
.2 Hydraflex Mesh all vertical and horizontal joints

PART 3 EXECUTION

3.1 PREPARATION

.1 Apply tile or backing coats to clean and sound surfaces which are true to line, plumb, level or uniformly sloping to floor drains, as applicable.

.2 Use patching and/or levelling compounds, in accordance with manufacturer's instructions, to correct any defects in the substrate.

.3 Ensure that floor drains are in place before installation of floor tiles.

3.2 WORKMANSHIP

.1 Install ceramic tile in strict accordance with the manufacturer's instructions.

.2 Fit tile around corners, fitments, fixtures, and other built-in objects. Maintain uniform joint appearance. Cut edges smooth and even.

.3 Maximum surface tolerance 1:800.

.4 Make joints between tile uniform, plumb, straight, true, even and flush with adjacent tile. Ensure sheet layout not visible after installation. Align patterns.

.5 Except where otherwise indicated, lay out tiles so perimeter tiles are minimum 1/2 size.

.6 Sound tiles after setting and replace hollow- sounding units to obtain full bond.

.7 Make internal angles square. Make external angles with metal trim.

.8 Clean installed tile surfaces after installation and grouting cured.

.9 Make control joints where indicated. Install divider strips in accordance with the manufacturer's instructions.

3.3 TILE INSTALLATION

.1 Install ceramic tiles in accordance with applicable TTMAC details.

.2 Install tile edge in accordance with the manufacturer's instructions.

3.4 CLEANING

.1 Upon completion of the installation remove from the premises all surplus material, dirt and debris caused by the work of this Section and leave the installation clean and ready for the intended use by the Owner.

.2 Clean any drippage and spills of surplus material from adjacent surfaces and make good any damage caused by the work of this Section.

.3 Proceed in accordance with Section 01 74 11.

END OF SECTION

PART 1 GENERAL

1.1 RELATED REQUIREMENTS

.1 Section 09 21 16 - Gypsum Board Assemblies

.2 Division 23 - Heating, Ventilating and Air Conditioning (HVAC)

.3 Division 26 – Electrical.

1.2 REFERENCE STANDARDS

.1 American Society for Testing and Materials (ASTM):
- .1 ASTM C423-17, Standard Test Method for Sound Absorption and Sound Absorption Coefficients by the Reverberation Room Method.
- .2 ASTM E580/E580M-16, Standard Practice for Installation of Ceiling Suspension Systems for Acoustical Tile and Lay-in Panels in Areas Subject to Earthquake Ground Motions.
- .3 ASTM C635/C635M-13a, Standard Specification for the Manufacture, Performance and Testing of Metal Suspension Systems for Acoustical Tile and Lay-In Panel Ceilings.
- .4 ASTM C636/C636M-13, Standard Practice for Installation of Metal Ceiling Suspension Systems for Acoustical Tile and Lay-In Panels.
- .5 ASTM E1264-14, Standard Classification for Acoustical Ceiling Products.
- .6 ASTM E1414-16, Standard Test Method for Airborne Sound Attenuation Between Rooms Sharing a Common Ceiling Plenum.
- .7 ASTM E1477-98a(2017), Standard Test Method for Luminous Reflectance Factor of Acoustical Materials by Use of Integrating-Sphere Reflectometers.

.2 California Department of Public Health (CDPH):
- .1 CDPH/EHLB, Standard Method Version 1.1 - 2010.

.3 Federal Trade Commission (FTC).

.4 Hardwood Plywood and Veneer Association (HPVA).

.5 Health Canada/Workplace Hazardous Materials Information System (WHMIS)
- .1 Material Safety Data Sheets (MSDS).

.6 Underwriter's Laboratories of Canada (ULC)
- .1 CAN/ULC-S102-11, Standard Method of Test for Surface Burning Characteristics of Building Materials and Assemblies.

1.3 COORDINATION

.1 Do not begin erection of the ceiling suspension system until the work above the ceiling has been inspected by the Consultant.

1.4 PRE-INSTALLATION MEETING

.1 Convene a pre-installation meeting prior to beginning on-site installation, with the Contractor, the Consultant and other affected trades:
- .1 Verify project requirements.
- .2 Review installation and substrate conditions.
- .3 Coordinate with the work of other sections.

.4 Review the manufacturer's installation instructions and warranty requirements.
.5 Review accepted shop drawings for installation requirements.

1.5 SUBMITTALS

.1 Provide submittals in accordance with Section 01 33 00 - Submittal Procedures.

.2 Product Data:
- .1 Submit manufacturer's instructions, printed product literature and data sheets for acoustical suspension, acoustic panels, and system accessories. Include product characteristics, performance criteria, physical size, finish and limitations.
- .2 Submit manufacturer’s installation instructions.
- .3 Submit for each type of ceiling unit and suspension system required.
- .4 Include manufacturer's material safety data sheets for the safe handling of the specified materials and products, in accordance with Workplace Hazardous Materials Information Service (WHMIS) requirements.

.3 Shop Drawings:
- .1 Submit reflected ceiling plans for special grid patterns as indicated.
- .2 Indicate the layout, insert and hanger spacing and fastening details, the splicing method for main and cross runners, change in level details, access panel dimensions and locations, and acoustical unit support at ceiling fixtures, lateral bracing and accessories.
- .3 The ceiling suspension system, including all related connections and fastenings, shall be designed by a structural engineer licensed to practise in the Province of Ontario. Each shop drawing submitted shall bear the stamp and signature of the aforesaid structural engineer.
  - .1 Indicate components and installation methods to conform to specified seismic design and construction requirements of Contract Documents and in general accordance with ASTM E580/E580M.
  - .2 Include supporting details, treatment of cross runners, main runners, and wall closures at terminal ends, suspension wire, lateral force bracing, light fixtures and services within the ceiling, seismic isolation joints and partition bracing].

.4 Samples:
- .1 Submit for review and acceptance of each component specified or necessary for a complete installation. Include technical descriptive data.
- .2 Submit duplicate samples of each component proposed for use in the ceiling suspension system.
- .3 Submit duplicate 150 mm x 100 mm samples of each type of acoustical unit.

.5 Manufacturer's Certifications: submit product certificates signed by manufacturer certifying materials comply with specified performance characteristics and criteria and physical requirements. Include certification of sustainable requirements.

.6 Maintenance Data: Submit maintenance data for the acoustical suspension system and for the acoustical panels for incorporation into the operation and maintenance manual specified in Section 01 78 00 Closeout Submittals.

.7 Post-installation certification: After installation, provide written certification, signed by the Structural Engineer responsible for the shop drawings, that all items have been installed in accordance with the shop drawings.

.8 Maintenance Materials
- .1 Provide for maintenance use, acoustical units amounting to 2% of the gross ceiling area for each pattern and type of acoustical panel, suspension system and trim components, required for the project.

.1 Provide a minimum of 1 complete factory-sealed package of each.
.2 Ensure extra materials are from same production run as installed materials.
.3 Deliver extra materials for each type of acoustical unit in original unopened packages clearly identified, including colour and texture and store where directed.
.4 Do not use maintenance materials for the correction of deficiencies or remedial work during the warranty period.

1.6 DELIVERY, STORAGE AND HANDLING

.1 Deliver, store and handle materials in accordance with Section 01 61 00 – Common Product Requirements and with the manufacturer's written instructions.

.2 Delivery and Acceptance Requirements: deliver materials to the site in original factory packaging, labelled with the manufacturer's name and address.

.3 Storage and Handling Requirements:
.1 Store materials flat, indoors in a clean, dry, well-ventilated area and in accordance with the manufacturer's recommendations.
.2 Store and protect acoustical ceiling panels and suspension grid components from nicks, scratches, and blemishes.
.3 Replace defective or damaged materials with new.
.4 Store extra materials required for maintenance, where directed by the Consultant.

1.7 WASTE MANAGEMENT AND DISPOSAL

.1 Handle and dispose of waste materials generated by the work of this Section, including packaging materials, in accordance with Section 01 74 19 - Waste Management and Disposal.

1.8 ENVIRONMENTAL REQUIREMENTS

.1 Permit wet work to dry before beginning to install.

.2 Allow wood veneer ceiling materials to reach room temperature and stabilize moisture content for a minimum of 72 hours prior to installation.

.3 Maintain uniform minimum temperature of 15°C and humidity of 20 to 40% before and during installation.

.4 Store materials in the work area 48 hours prior to installation.

PART 2 PRODUCTS

2.1 DESIGN CRITERIA

.1 Design Requirements:
.1 Intermediate duty system to ASTM C635.
.2 Maximum deflection: 1/360th of span to ASTM C635 deflection test.
.3 Provide product with minimum 45% recycled content.

.2 Seismic design requirements:
.1 Design acoustical ceiling installation to resist effects of earthquake motions under seismic design conditions specified in the Contract Documents and specifically on drawing S000 item D01-3 SEISMIC SYSTEM/LOADING DATA. Provide components as necessary to implement the design.

2.2 ACOUSTICAL CEILING SUSPENSION

.1 Intermediate duty system to ASTM C 635/ASTM C635M, exposed tee system, as follows:
- .1 Type ACT-1:
  - .1 Material: Double web electrogalvanized sheet steel.
  - .2 Face dimension: 24 mm.
  - .3 Surface finish: Baked polyester paint, colours: White.
  - .4 Grid dimensions: To suit panel size.
  - .5 Acceptable Material: Certainteed – 15/16” Classic Hook System.
- .2 Type ACT-2:
  - .1 Material:
    - .1 Double web electrogalvanized sheet steel.
    - .2 Factory applied, white closed cell foam gasket.
  - .2 Face dimension: 24 mm.
  - .3 Surface finish: Baked polyester paint, colours: White.
  - .4 Grid dimensions: To suit panel size.
  - .5 Acceptable Material: Certainteed – 15/16” Cleanroom Stab System.

.2 Basic materials for suspension system: commercial quality cold rolled steel zinc coated.

.3 Suspension system: non fire rated, made up as follows:
- .1 2 directional exposed tee bar grid.
- .2 2 directional concealed tee spline.
- .3 Concealed tee access spline.
- .4 Concealed tongue and groove runner.
- .5 Concealed H runner, tee spline and flat steel spline.
- .6 Concealed zee runner and flat steel spline.

.4 Exposed tee bar grid components: shop painted satin sheen white. Components die cut. Main tee with double web, rectangular bulb and 25 mm rolled cap on exposed face. Cross tee with rectangular bulb; web extended to form positive interlock with main tee webs; lower flange extended and offset to provide flush intersection.

.5 Hanger wire: galvanized soft annealed steel wire:
- .1 3.6 mm diameter for access tile ceilings.
- .2 To ULC design requirements for fire rated assemblies.
- .3 2.6 mm diameter for other ceilings.

.6 Hanger inserts: purpose made.

.7 Accessories: splices, clips, wire ties, retainers and wall moulding flush, to complement suspension system components, as recommended by system manufacturer.

2.3 ACOUSTICAL CEILING PANELS

.1 ACT-1: Acoustical Panels: to ASTM E1264, Type III, Form 1, Pattern C, D, characteristics as follows:
- .1 Colour: White.
- .2 Size: 609 mm x 609 mm x 19 mm.
- .3 Edge detail: Square
- .4 Fire performance: Class A, flame spread 25 or under (UL labelled), smoke 50.
- .5 CAC: 42
- .6 NRC .75
- .7 Light reflectance: 0.83
- .8 Acceptable Material: CertainTeed, Performa Sereno Fine Fissured.

.2 ACT-2: Acoustical Panels: to ASTM E1264, Type XX, Pattern G, characteristics as follows:
- .1 Colour: White.
- .2 Size: 609 mm x 609 mm x 19 mm.
- .3 Edge detail: Square
- .4 Fire performance: Class A, flame spread 25 or under (UL labelled), smoke 50.
- .5 CAC: 40
- .6 NRC .00
- .7 Light reflectance: 0.77
- .8 Acceptable Material: CertainTeed, Aquarock.

2.4 ACCESSORIES

.1 Hold down clips: purpose made clips to secure the panel to the suspension system.

PART 3 EXECUTION

3.1 EXAMINATION

.1 Verify conditions of substrates are acceptable for acoustical ceiling panel and suspension system installation in accordance with the manufacturer's written instructions.
- .1 Visually inspect the substrate in the presence of the Consultant.
- .2 Inform the Consultant of unacceptable conditions immediately upon discovery.
- .3 Proceed with the installation only after unacceptable conditions have been remedied and after receipt of written approval to proceed from the Consultant.

.2 Commencement of the installation will be construed as acceptance of the site conditions and, thereafter, the Contractor shall be fully responsible for satisfactory work as specified herein.

3.2 INTERFACE WITH OTHER WORK

.1 Co-ordinate ceiling work to accommodate components of other sections, such as light fixtures, diffusers, speakers, sprinkler heads, to be built into acoustical ceiling components.

3.3 SUSPENSION SYSTEM INSTALLATION

.1 Comply with manufacturer's written installation instructions and recommendations, including product technical bulletins, product carton installation instructions, and data sheets.

.2 Install the suspension system in accordance with accepted shop drawings, Certification Organizations tested design requirements and ASTM C636 except where specified otherwise.

.3 Lay out the centre line of ceiling both ways, to provide balanced borders at the room perimeter with border units not less than 50% of the standard unit width, according to the reflected ceiling plan.

.4 The finished ceiling system to be square with adjoining walls and level within 1:1000.

.5 Secure hangers to overhead structure using attachment methods as indicated on the reviewed and accepted shop drawings and acceptable to the Consultant.

.6 Install hangers spaced at maximum 1200 mm centres and within 150 mm from ends of main tees.

.7 Ensure the suspension system is coordinated with the location of related components. Provide carrying channels as necessary to bridge at unavoidable interference between the suspension system and other work above the ceiling.

.8 Install wall moulding to provide the correct ceiling height.

.9 The completed suspension system to support superimposed loads, such as lighting fixtures, diffusers, grilles, and speakers.

.10 Support at light fixtures, diffusers with additional ceiling suspension hangers within 150 mm of each corner and at maximum 600 mm around the perimeter of the fixture.

.11 Attach cross members to main runners to provide a rigid assembly.

.12 Frame at openings for light fixtures, air diffusers, speakers and at changes in ceiling heights.

.13 Expansion joints:
- .1 Erect two main runners parallel, 25 mm apart, on the building expansion joint line. Lay in a strip of acoustic board, painted black, 25% narrower than the space between 2 T-bars.
- .2 Supply and install "Z" shaped metal trim pieces at each side of the expansion joint. Design to accommodate ± 25 mm movement and maintain visual closure. Finish metal components to match adjacent exposed metal trim. Provide backing plates behind butt joints.

3.4 ACOUSTICAL CEILING PANEL INSTALLATION

.1 Install lay-in acoustical panels in ceiling suspension system in accordance with manufacturer's instructions and as indicated.

3.5 SITE QUALITY CONTROL

.1 Arrange for periodic site visits by the structural engineer responsible for the shop drawings to review installed work for conformity to the design.

.2 Arrange for periodic site visits by the manufacturer's representative to review installed work for conformity to manufacturer's installation instructions and recommendations.

.3 Submit written site reports by the designer to the Consultant within 3 days of visit.

3.6 CLEANING

.1 Progress Cleaning: clean in accordance with Section 01 74 11 – Cleaning.
- .1 Leave the work area clean at end of each day.

.2 Final Cleaning: upon completion remove surplus materials, rubbish, tools and equipment in accordance with Section 01 74 11 – Cleaning.
- .1 Touch up scratches, abrasions, voids and other defects in painted surfaces.

.3 Waste Management: separate waste materials for reuse and recycling in accordance with Section 01 74 19 –Waste Management and Disposal.

3.7 PROTECTION

.1 Protect installed products and components from damage during construction.

.2 Repair damage to adjacent materials caused by acoustical suspension installation.

END OF SECTION

PART 1 GENERAL

1.1 REFERENCES

.1 American Society for Testing and Materials International (ASTM)
- .1 ASTM F 1066-04, Standard Specification for Vinyl Composition Floor Tile.
- .2 .2 ASTM F 1700-Standard Specification for Solid Vinyl Flooring.
- .3 .2 ASTM F150, Standard Test Method for Electrical Resistance of Conductive and Static Dissipative Resilient Flooring.

.2 Health Canada/Workplace Hazardous Materials Information System (WHMIS)
- .1 Material Safety Data Sheets (MSDS).

1.2 ACTION AND INFORMATIONAL SUBMITTALS

.1 Provide submittals in accordance with Section 01 33 00.

.2 Provide product data in accordance with Section 01 33 00.

.3 Provide samples in accordance with Section 01 33 00.
- .1 Submit duplicate tile in size specified.

.4 Closeout Submittals:
- .1 Provide maintenance data for resilient flooring for incorporation into manual specified in Section 01 78 00 - Closeout Submittals.
- .2

1.3 DELIVERY, STORAGE AND HANDLING

.1 Deliver, store and handle materials in accordance with Section 01 61 00 - Common Product Requirements.

1.4 AMBIENT CONDITIONS

.1 Maintain air temperature and structural base temperature at flooring installation area above 20 degrees for 48 hours before, during and 48 hours after installation.

1.5 MAINTENANCE

.1 Extra Materials:
- .1 Provide extra materials of resilient sheet flooring and adhesives in accordance with Section 01 78 00.
- .2 Provide 25 m² of each colour, pattern and type flooring material required for project for maintenance use.
- .3 Extra materials one piece and from same production run as installed materials.
- .4 Identify each roll of sheet flooring and each container of adhesive.
- .5 Store where directed by Consultant.
- .6

PART 2 PRODUCTS

2.1 MATERIALS

.1 Vinyl Composition Tile – VCT1
- .1 Vinyl Composite Tile: to ASTM F 1066, Composition 1 - non asbestos Class 2 - through pattern tile, plain.
- .2 Sizes: 305 x 305 mm.
- .3 Thickness: Size 3.2 mm
- .4 Colour: 3 colours selected by Consultant from the standard range.
- .5 Standard of Acceptance: Vinyl Composite Tile by Tarket

.2 Rubber Base – RB1
- .1 Rubber Base: to ASTM F 1861 type TP (thermoplastic blend of rubber and vinyl).
- .2 Material: Thermoplastic belnd of rubber and vinyl.
- .3 Contains 10% post industrial recycled content.
- .4 Profile: Standard Cove
- .5 Guage: 3.175 mm
- .6 Height: 101.6 mm
- .7 Colour: 177 Steel Blue
  - .1 700 Series Wall Base, by Roppe
  - .2 Traditional Wall Base, by Johnsonite

.3 Primers and adhesives: of types recommended by resilient flooring manufacturer for specific material on applicable substrate on or below grade.

.4 Sub-floor filler and leveller: white premix latex requiring water only to produce cementitious paste as recommended by flooring manufacturer for use with their product.

.5 Metal edge strips:
- .1 Aluminum extruded, smooth, stainless steel with lip to extend under floor finish, shoulder flush with top of adjacent floor finish.

.6 Edging to floor penetrations: stainless steel, type recommended by flooring manufacturer.

.7 Sealer and wax: type recommended by resilient flooring material manufacturer for material type and location.

PART 3 EXECUTION

3.1 MANUFACTURER'S INSTRUCTIONS

.1 Compliance: comply with manufacturer's written recommendations or specifications, including product technical bulletins, handling, storage and installation instructions, and datasheets.

3.2 INSPECTION

.1 .1 Ensure concrete floors are dry, by using test methods recommended by tile manufacturer.

3.3 PREPARATION

.1 Clean floor and apply filler; trowel and float to leave smooth, flat hard surface. Prohibit traffic until filler cured and dry.

.2 Remove sub-floor ridges and bumps. Fill low spots, cracks, joints, holes and other defects with sub-floor filler.

.3 Prime concrete slab to resilient flooring manufacturer's printed instructions.

.4 .4 Protect adjacent work areas and finish surfaces from damage during product installation.

.5 .5 Prepare substrate for rubber base in accordance with manufacturer’s written instructions. Prepare substrates to be smooth, rigid, flat, level, permanently dry, clean and free from foreign materials such as dust, grease, oils, solvent, old adhesive residue, non-porous surfaces, and all other contaminants that may interfere with adhesive bond.

3.4 APPLICATION: FLOORING

.1 Provide high ventilation rate, with maximum outside air, during installation, and for 72 hours after installation. If possible, vent directly to outside. Do not let contaminated air recirculate through district or whole building air distribution system. Maintain extra ventilation for at least one month following building occupation.

.2 Apply adhesive uniformly using recommended trowel. Do not spread more adhesive than can be covered by flooring before initial set takes place.

.3 Lay flooring with seams parallel to building lines to produce a minimum number of seams. Border widths minimum 1/3 width of full material.

.4 Install flooring as indicated on finish plans.

.5 As installation progresses, and after installation, roll flooring in 2 directions with 45 kg minimum roller to ensure full adhesion.

.6 Cut tile and fit neatly around fixed objects.

.7 Install feature strips and floor markings where indicated. Fit joints tightly.

.8 Install flooring in pan type floor access covers. Maintain floor pattern.

.9 Continue flooring through areas to receive movable type partitions without interrupting floor pattern.

.10 Terminate flooring at centerline of door in openings where adjacent floor finish or colour is dissimilar.

.11 Install metal edge strips at unprotected or exposed edges where flooring terminates.

.12 Continue flooring over areas which will be under built-in furniture.

3.5 APPLICATION: BASE

.1 Lay out base to keep number of joints at minimum.

.2 Clean substrate and prime with one coat of adhesive.

.3 Apply adhesive to back of base.

.4 Set base against wall and floor surfaces tightly by using 3 kg hand roller.

.5 Install straight and level to variation of 1:1000.

.6 Scribe and fit to door frames and other obstructions. Use premoulded end pieces at flush door frames.

.7 Cope internal corners. Use premoulded corner units for right angle external corners. Use formed straight base material for external corners of other angles.

.8 Use toeless type base where floor finish will be carpet, coved type elsewhere.

.9 Install toeless type base before installation of carpet on floors.

.10 Heat weld base in accordance with manufacturer's printed instructions.

3.6 FIELD QUALITY CONTROL

.1 Manufacturer's Field Services:
  .1 Provide manufacturer's field services consisting of product use recommendations and periodic site visits for inspection of product installation in accordance with manufacturer's instructions.

3.7 CLEANING

.1 Remove excess adhesive from floor, base and wall surfaces without damage.

.2 Clean, seal and wax floor and base surface to flooring manufacturer's printed instructions.

3.8 PROTECTION

.1 Protect new floors from time of final set of adhesive until final inspection.

.2 Prohibit traffic on floor for 48 hours after installation.

.3 Use only water-based coating for linoleum.

END OF SECTION

PART 1 GENERAL

1.1 REFERENCES

.1 Health Canada/Workplace Hazardous Materials Information System (WHMIS)
  .1 Material Safety Data Sheets (MSDS).

.2 Master Painters Institute (MPI):
  .1 MPI Architectural Specification Manual, 2004 (referred to herein as "MPI Manual")
  .2 MPI Approved Product List, August 2007 (Referred to herein as "MPI APL").

.3 National Fire Code of Canada - [1995]

.4 Society for Protective Coatings (SSPC)
  .1 SSPC Painting Manual, Volume Two, 8th Edition, Systems and Specifications Manual.

.5 Test Method for Measuring Total Volatile Organic Compound Content of Consumer Products, Method 24 (for Surface Coatings) of the Environmental Protection Agency (EPA).

1.2 QUALITY ASSURANCE

.1 Contractor shall have a minimum of five years proven satisfactory experience. Provide a list of last three comparable jobs including, job name and location, specifying authority, and project manager.

.2 Qualified journeymen who have a "Tradesman Qualification Certificate of Proficiency" shall be engaged in repainting work. Apprentices may be employed provided they work under the direct supervision of a qualified journeyman in accordance with applicable trade regulations.

.3 Conform to latest MPI requirements for interior repainting work including cleaning, preparation and priming.

.4 Materials (primers, paints, coatings, varnishes, stains, lacquers, fillers, thinners, solvents, etc.) shall be in accordance with the latest edition of the MPI Approved Product List and shall be from a single manufacturer for each system used.

.5 Paint materials such as linseed oil, shellac, turpentine, etc. shall be the highest quality product of an approved manufacturer listed in MPI Maintenance Repainting Manual and shall be compatible with other coating materials as required.

.6 Retain purchase orders, invoices and other documents to prove conformance with noted MPI requirements when requested by Owner’s Representative.

.7 Standard of Acceptance: When viewed using final lighting source surfaces shall indicate the following:
  .1 Walls: No defects visible from a distance of 1000 mm at 90o to surface.
  .2 Ceilings: No defects visible from floor at 45o to surface.
  .3 Final coat to exhibit uniformity of colour and sheen across full surface area.

1.3 ACTION AND INFORMATIONAL SUBMITTALS

.1 Submittals in accordance with Section 01 33 00 - Submittal Procedures.

.2 Product Data:
- .1 Submit product data and instructions for each paint and coating product to be used.
- .2 Submit product data for the use and application of paint thinner.
- .3 Submit two copies of Workplace Hazardous Materials Information System (WHMIS) Material Safety Data Sheets (MSDS) in accordance with Section 01 33 00 - Submittal Procedures. Indicate VOCs during application and curing.
- .4 Submit certificates signed by manufacturer certifying that materials comply with specified performance characteristics and physical properties.
- .5 Submit manufacturer’s instructions.

.3 Samples:
- .1 Submit full range colour sample chips to indicate where colour availability is restricted.
- .2 Submit duplicate 200 x 300 mm sample panels of each paint, clear coating [special finish] with specified paint or coating in colours, gloss/sheen and textures required to MPI Architectural Painting Specification Manual standards.
- .3 Retain reviewed samples on-site to demonstrate acceptable standard of quality for appropriate on-site surface.
- .4 Certificates: submit certificates signed by manufacturer certifying that materials comply with specified performance characteristics and physical properties.
- .5 Closeout Submittals: submit maintenance data for incorporation into manual specified in Section 01 78 00 - Closeout Submittals include following:
  - .1 Product name, type and use.
  - .2 Manufacturer's product number.
  - .3 Colour number[s].
  - .4 MPI Environmentally Friendly classification system rating.

1.4 MAINTENANCE

.1 Extra Materials:
- .1 Deliver to extra materials from same production run as products installed. Package products with protective covering and identify with descriptive labels. Comply with Section 01 78 00 - Closeout Submittals.
- .2 Quantity: provide one - four litre can of each type and colour of primer and finish coating. Identify colour and paint type in relation to established colour schedule and finish system.

1.5 STORAGE AND HANDLING

.1 Storage and Protection:
- .1 Provide and maintain dry, temperature controlled, secure storage.
- .2 Store materials and supplies away from heat generating devices.
- .3 Store materials and equipment in well ventilated area within temperature as recommended by manufacturer.

.2 Fire Safety Requirements:
- .1 Fire Safety Requirements:
- .2 Store oily rags, waste products, empty containers and materials subject to spontaneous combustion in ULC approved, sealed containers and remove from site on a daily basis.
- .3 Handle, store, use and dispose of flammable and combustible materials in accordance with National Fire Code of Canada requirements.

1.6 SITE CONDITIONS

.1 Heating, Ventilation and Lighting:
- .1 Ventilate enclosed spaces.
- .2 Provide heating facilities to maintain ambient air and substrate temperatures above 10 degrees C for 24 hours before, during and after paint application until paint has cured sufficiently.
- .3 Provide continuous ventilation for seven days after completion of application of paint.
- .4 Provide minimum lighting level of 323 Lux on surfaces to be painted.

.2 Temperature, Humidity and Substrate Moisture Content Levels:
- .1 Apply paint finishes when ambient air and substrate temperatures at location of installation can be satisfactorily maintained during application and drying process, within MPI and paint manufacturer's prescribed limits.
- .2 Test concrete, masonry, and plaster surfaces for alkalinity as required.
- .3 Apply paint to adequately prepared surfaces, when moisture content is below paint manufacturer's prescribed limits.
- .4 Test for moisture using calibrated electronic Moisture Meter. Test concrete floors for moisture using "cover patch test".

.3 Additional application requirements:
- .1 Apply paint finish in areas where dust is no longer being generated by related construction operations or when wind or ventilation conditions are such that airborne particles will not affect quality of finished surface.
- .2 Apply paint to adequately prepared surfaces and to surfaces within moisture limits.
- .3 Apply paint when previous coat of paint is dry or adequately cured.

PART 2 PRODUCTS

2.1 MATERIALS

.1 Paint materials listed in the MPI Approved Products List (APL) are acceptable for use on this project.

.2 Provide paint materials for paint systems from single manufacturer.

.3 Conform to latest MPI requirements for interior painting work including preparation and priming.

.4 Materials (primers, paints, coatings, varnishes, stains, lacquers, fillers, thinners, solvents, etc.) in accordance with MPI Architectural Painting Specification Manual "Approved Product" listing.

.5 EQc4.2: Provide primers, paints, sealers, coatings and wood finishes with VOC quantities lower than limits stated in Green Seal's Standards GS-3 and GS-11 and SCAQMD Rule #1113, current editions.

.6 Use only MPI listed materials having an "L" (LEED) rating designation.

2.2 COLOURS

.1 Allow for colours indicated in schedule as well as 2 additional accent colours.

2.3 MIXING AND TINTING

.1 Perform colour tinting operations prior to delivery of paint to site, in accordance with manufacturer's written instructions. Obtain written approval from Consultant for tinting of painting materials.

.2 Use and add thinner in accordance with paint manufacturer's recommendations. Do not use kerosene or similar organic solvents to thin water-based paints.

.3 Thin paint for spraying in accordance with paint manufacturer's instructions.

.4 Re-mix paint in containers prior to and during application to ensure break-up of lumps, complete dispersion of settled pigment, and colour and gloss uniformity.

2.4 GLOSS/SHEEN RATINGS

Gloss Level Category	Units @ 60º	Units @ 85º
G1 - matte finish	0 to 5	maximum 10
G2 - velvet finish	0 to 10	10 to 35
G3 - eggshell finish	10 to 25	10 to 35
G4 - satin finish	20 to 35	minimum 35
G5 - semi-gloss finish	35 to 70	
G6 - gloss finish	70 to 85	
G7 - high gloss finish	> 85	

2.5 PAINTING SYSTEMS

.1 Paint surfaces in accordance with the following MPI Architectural Specification Manual Requirements.

.2 Exterior Painting:
- .1 For Galvanized metal surfaces (not chromate passivated) to receive paint finish, apply EXT5.3B: Alkyd, G5, Premium Grade.

.3 Interior Painting:
- .1 For structural steel and metal fabrications: exposed columns beams joists and miscellaneous metal (factory primed):
  - .1 Apply INT5.1E: Alkyd G4 finish, Premium grade.
- .2 Plaster and gypsum board:
  - .1 Apply type material, apply 9.2A over latex sealer: High performance architectural latex, Premium grade paint having low or no VOC's applied to a minimum of one coat primer with two coats of finish in accordance with MPI Manual, gloss level as follows:
    - .1 Walls: G3
    - .2 Ceilings and bulkheads: G2

PART 3 EXECUTION

3.1 MANUFACTURER'S INSTRUCTIONS

.1 Compliance: comply with manufacturer's written recommendations or specifications, including product technical bulletins, handling, storage and installation instructions, and datasheets.

.2 Perform preparation and operations for painting in accordance with MPI Manual except where specified otherwise.

3.2 EXAMINATION

.1 Investigate existing substrates for problems related to proper and complete preparation of surfaces to be painted. Report to the Consultant damages, defects, unsatisfactory or unfavourable conditions before proceeding with work.

.2 Conduct moisture testing of surfaces to be painted using properly calibrated electronic moisture meter, except test concrete floors for moisture using simple "cover patch test". Do not proceed with work until conditions fall within acceptable range as recommended by manufacturer.

3.3 PREPARATION

.1 Protection:
- .1 Protect existing building surfaces and adjacent structures from paint spatters, markings and other damage by suitable non-staining covers or masking. If damaged, clean and restore surfaces as directed Consultant.
- .2 Protect items that are permanently attached such as Fire Labels on doors and frames.
- .3 Protect factory finished products and equipment.

.2 Surface Preparation:
- .1 Remove electrical cover plates, light fixtures, surface hardware on doors, bath accessories and other surface mounted equipment, fittings and fastenings prior to undertaking painting operations. Identify and store items in secure location and re-installed after painting is completed.
- .2 Move and cover furniture and portable equipment as necessary to carry out painting operations. Replace as painting operations progress.
- .3 Place "WET PAINT" signs in occupied areas as painting operations progress. Signs to approval of Consultant.

.3 Clean and prepare surfaces in accordance with MPI Architectural Painting Specification Manual requirements. Refer to MPI Manual in regard to specific requirements.

.4 Prevent contamination of cleaned surfaces by salts, acids, alkalis, other corrosive chemicals, grease, oil and solvents before prime coat is applied and between applications of remaining coats. Apply primer, paint, or pretreatment as soon as possible after cleaning and before deterioration occurs.

.5 Where possible, prime non-exposed surfaces of new wood surfaces before installation. Use same primers as specified for exposed surfaces.
- .1 Apply vinyl sealer to MPI #36 over knots, pitch, sap and resinous areas.
- .2 Apply wood filler to nail holes and cracks.
- .3 Tint filler to match stains for stained woodwork.

.6 Sand and dust between coats as required to provide adequate adhesion for next coat and to remove defects visible from a distance up to 1000 mm.

.7 Clean metal surfaces to be painted by removing rust, loose mill scale, welding slag, dirt, oil, grease and other foreign substances in accordance with MPI requirements.

.8 Touch up of shop primers with primer as specified.

3.4 APPLICATION

.1 Method of application to be as approved Consultant. Conform to manufacturer's application instructions unless specified otherwise.

.2 Apply coats of continuous paint film of uniform thickness. Repaint thin spots or bare areas before next coat of paint is applied.

.3 Allow surfaces to dry and properly cure after cleaning and between subsequent coats for minimum time period as recommended by manufacturer.

.4 Sand and dust between coats to remove visible defects.

.5 Finish surfaces both above and below sight lines as specified for surrounding surfaces, including such surfaces as tops of interior cupboards and cabinets and projecting ledges.

.6 Finish inside of cupboards and cabinets as specified for outside surfaces.

.7 Finish closets and alcoves as specified for adjoining rooms.

.8 Finish top, bottom, edges and cut-outs of doors after fitting as specified for door surfaces.

3.5 MECHANICAL/ELECTRICAL EQUIPMENT

.1 Paint finished area exposed conduits, piping, hangers, ductwork and other mechanical and electrical equipment with colour and finish to match adjacent surfaces, except as indicated.

.2 Other unfinished areas: leave exposed conduits, piping, hangers, ductwork and other mechanical and electrical equipment in original finish and touch up scratches and marks.

.3 Touch up scratches and marks on factory painted finishes and equipment with paint as supplied by manufacturer of equipment.

.4 Do not paint over nameplates.

.5 Keep sprinkler heads free of paint.

.6 Paint inside of ductwork where visible behind grilles, registers and diffusers with primer and one coat of matt black paint.

.7 Paint fire protection piping red.

.8 Paint disconnect switches for fire alarm system and exit light systems in red enamel.

.9 Paint natural gas piping yellow.

.10 Paint both sides and edges of backboards for telephone and electrical equipment before installation. Leave equipment in original finish except for touch-up as required, and paint conduits, mounting accessories and other unfinished items.

.11 Do not paint interior transformers and substation equipment.

3.6 FIELD QUALITY CONTROL

.1 Field review of exterior painting operations to be carried out by Consultant.

.2 Advise Consultant when each surface and applied coating is ready for inspection. Do not proceed with subsequent coats until previous coat has been approved.

.3 Co-operate with Consultant and provide access to areas of work.

3.7 CLEANING

.1 Remove paint where spilled, splashed, splattered or sprayed as work progresses using means and materials that are not detrimental to affected surfaces.

.2 Keep work area free from an unnecessary accumulation of tools, equipment, surplus materials and debris.

.3 Remove combustible rubbish materials and empty paint cans each day and safely dispose of same in accordance with requirements of authorities having jurisdiction.

.4 Clean equipment and dispose of wash water used for water borne materials, solvents used for oil based materials as well as other cleaning and protective materials (e.g. rags, drop cloths, masking papers, etc.), paints, thinners, paint removers/strippers in accordance with the safety requirements of authorities having jurisdiction and as noted herein.

.5 Painting equipment shall be cleaned in leak-proof containers that will permit particulate matter to settle out and be collected. Sediment remaining from cleaning operations shall be recycled or disposed of in a manner acceptable to authorities having jurisdiction.

.6 Paint and coatings in excess of repainting requirements shall be recycled as noted herein.

3.8 RESTORATION

.1 Clean and re-install hardware items removed before undertaken painting operations.

.2 Remove protective coverings and warning signs as soon as practical after operations cease.

.3 Remove paint splashings on exposed surfaces that were not painted. Remove smears and spatter immediately as operations progress, using compatible solvent.

.4 Protect freshly completed surfaces from paint droppings and dust to approval of Consultant. Avoid scuffing newly applied paint.

.5 Restore areas used for storage, cleaning, mixing and handling of paint to clean condition as approved by Consultant.

3.9 SCHEDULE

.1 PT-01: Gull Wing Gray – Benjamin Moore – 2134-50
  .1 For gypsum board walls and vertical structural steel columns (refer also to Safety Yellow).

.2 PT-31: Cloud Cover – Benjamin Moor – OC-25
  .1 For gypsum board bulkheads and exposed metal deck, and exposed horizontal structure (steel joists and beams)

.3 PT-51: Trout Gray – Benjamin Moore – 2124-20
  .1 For painted doors.

.4 PT-61: Trout Gray – Benjamin Moore – 2124-20
  .1 For door frames and trims.

.5 PT-62: Cloud Cover – Benjamin Moor – OC-25, to typical exposed Misc. Metals

.6 Safety Yellow
  .1 Paint interior structural columns in apparatus bay from slab to a height of 2440mm with PT-01 above.

END OF SECTION

PART 1 GENERAL

1.1 REFERENCES

.1 American Society for Testing and Materials International (ASTM)
- .1 ASTM A 167, Standard Specification for Stainless and Heat-Resisting Chromium-Nickel Steel Plate, Sheet, and Strip.
- .2 ASTM A 240/A 240M-02, Specification for Chromium and Chromium-Nickel Stainless Steel Plate, Sheet, and Strip for Pressure Vessels and for General Applications.
- .3 ASTM A 480/A 480M-03, Specification for General Requirements for Flat-Rolled Stainless and Heat Resisting Steel Plate, Sheet, and Strip.
- .4 ASTM A 653/A 653M-02a, Specification for Steel Sheet, Zinc-Coated (Galvanized) or Zinc-Iron Alloy-Coated (Galvannealed) by the Hot-Dip Process.

.2 Canadian General Standards Board (CGSB)
- .1 CAN/CGSB-1.81-M90, Air Drying and Baking Alkyd Primer for Vehicles and Equipment.
- .2 CAN/CGSB-1.88-92, Gloss Alkyd Enamel Air Drying and Baking.
- .3 CAN/CGSB-1.104M-91, Semigloss Alkyd, Air Drying and Baking Enamel.

.3 Canadian Standards Association (CSA International)
- .1 CSA-B651, Accessible Design for the Built Environment.

.4 Health Canada/Workplace Hazardous Materials Information System (WHMIS)
- .1 Material Safety Data Sheets (MSDS).

1.2 ACTION AND INFORMATIONAL SUBMITTALS

.1 Provide submittals in accordance with Section 01 33 00 - Submittal Procedures.

.2 Product Data:
- .1 Submit manufacturer's printed product literature for toilet partitions or components, specifications and datasheet and include product characteristics, performance criteria, physical size, finish and limitations.

.3 Shop Drawings:
- .1 Indicate fabrication details, plans, elevations, hardware, and installation details.

.4 Samples:
- .1 Submit duplicate 300 x 300 mm samples of panel showing finished edge and corner construction and core construction.
- .2 Submit duplicate representative samples of each hardware item, including brackets, fastenings and trim.

.5 Manufacturer’s Instructions:
- .1 Submit manufacturer’s installation instructions.

1.3 QUALITY ASSURANCE

.1 Manufacturer: Provide products manufactured by a company with a minimum of 10 years successful experience manufacturing similar products.

1.4 DELIVERY, STORAGE AND HANDLING

.1 Protect finished surfaces during shipment and installation. Do not remove until immediately prior to final inspection.

.2 Deliver, store and handle materials and products in strict compliance with manufacturer's instructions and recommendations.

1.5 WARRANTY

.1 Manufacturer’s standard 3 year guarantee against defects in material and workmanship for stainless steel door hardware and mounting brackets.

PART 2 PRODUCTS

2.1 ACCEPTABLE MANUFACTURER

.1 Specification is based on Powder Coated Steel Toilet Partitions by Global Partitions.

2.2 MATERIALS

.1 Suspended metal toilet partitions.
- .1 Panels to begin max. 200mm above floor finish.
- .2 No gaps in partitions.
- .3 Provide steel supports as required.

.2 Doors and panels shall be 25mm thick, constructed of two sheets of 22-gauge galvanized stretcher-leveled quality steel formed and bonded under pressure with a non-toxic adhesive to a resin-impregnated, sound-deadening honeycomb core.

.3 Pilasters shall be 31.75mm, constructed of two sheets of 18-guage galvanized steel, formed and bonded under pressure with a non-toxic adhesive to a full resin-impregnated, sound-deadening full-face honeycomb core.

.4 Pilaster shoe: 0.8 mm stainless steel, 100 mm high.

.5 Attachment: stainless steel tamperproof type screws and bolts.

.6 Pilaster leveling device: Steel levelling bar with sleeve anchors requiring minimum 50 mm penetration into overhead structure.

.7 Attachment: stainless steel tamper proof type screws and bolts.

.8 Sealer: water resistant sealer or glue as recommended by laminate manufacturer.

2.3 FABRICATION

.1 Doors and panels shall be 25mm thick. Edges shall be sealed with a 22-gauge steel interlocking molding. Molding corners shall be welded to each other and to face sheets, and ground smooth to form a rigid frame around the component.

.2 Pilasters shall be 33.75mm, constructed of two sheets of 18-guage galvanized steel, formed and bonded under pressure with a non-toxic adhesive to a full resin-impregnated, sound-deadening full-face honeycomb core. Vertical edges shall be sealed with 22-gauge steel interlocking

molding. The bottom of each pilaster shall be sealed with a 22-guage steel interlocking molding. An 11-gauge slotted stirrup bracket shall be integrally welded on to top of each pilaster. Two 9.5mm diameter by 152mm long cadmium-plated studs anchor the mounting bracket to overhead structural steel members. A shoe shall conceal each ceiling mounting, having an internal cross section conforming to the pilaster.

.3 All units shall be cleaned prior to application of baked hybrid powder coating of at least 1.3 mil thickness.

2.4 HARDWARE

.1 All exposed door hardware shall be as noted:
- .1 Continuous stainless-steel hinge. Door hardware shall include a coat hook, bumper, stop, keeper, a concealed latch with emergency access and stainless-steel vandal resistant fasteners.

.2 Panel and Pilaster brackets shall be as noted:
- .1 Continuous Heavy Duty Anodized Extruded Aluminum (6063-T5 alloy) wall brackets are predrilled. Wall brackets are mounted with chromium plated steel vandal resistant fasteners. The attachment of brackets to the adjacent wall construction shall be accomplished with 63.5mm chromium plated steel vandal resistant screws and plastic anchors

.3 Pilaster shoes shall be stainless steel 100mm high with a #4 satin finish.

PART 3 EXECUTION

3.1 MANUFACTURER'S INSTRUCTIONS

.1 Compliance: comply with manufacturer's written recommendations or specifications, including product technical bulletins, handling, storage and installation instructions, and datasheets.

3.2 INSTALLATION

.1 Ensure supplementary anchorage, if required, is in place.

.2 Do work in accordance with CSA-B651.

3.3 ERECTION

.1 Partition erection:
- .1 Install partitions secure, plumb and square.
- .2 Anchor mounting brackets to masonry or concrete surfaces using screws and shields: to hollow walls using bolts and toggle type anchors.
- .3 Attach panel and pilaster to brackets with through type sleeve bolt and nut.
- .4 Provide for adjustment of floor variations with screw jack through steel saddles made integral with pilaster. Conceal junction between pliaster and floor with stainless steel shoes.
- .5 Provide templates for locating threaded studs through finished ceilings.
- .6 Equip each door with hinges, latch set, and each stall with coat hook mounted on partition wall. Provide additional coat hook at 1200 a.f.f. for barrier free stall. Adjust and align hardware for proper function. Set door open position at full open. Install door bumper door mounted.
- .7 Equip outswinging doors with door pulls on inside of door in accordance with CSA-B651.
- .8 Install hardware and grab bars as indicated.

3.4 ADJUSTING

.1 Adjust doors and locks for optimum, smooth operating condition.

.2 Lubricate hardware and other moving parts.

3.5 CLEANING

.1 Perform cleaning after installation to remove construction and accumulated environmental dirt.

.2 Clean surfaces after installation using manufacturer's recommended cleaning procedures.

.3 Clean stainless steel with damp rag and approved non-abrasive cleaner.

.4 Clean and polish hardware and stainless components.

.5 Upon completion of installation, remove surplus materials, rubbish, tools and equipment barriers.

END OF SECTION

General

1.1 REFERENCES

.1 ASTM International
- .1 ASTM A 167-[99(2009)], Standard Specification for Stainless and Heat-Resisting Chromium-Nickel Steel Plate, Sheet, and Strip.
- .2 ASTM B 456-[03], Standard Specification for Electrodeposited Coatings of Copper Plus Nickel Plus Chromium and Nickel Plus Chromium.
- .3 ASTM A 653/A 653M-[09], Standard Specification for Steel Sheet, Zinc-Coated (Galvanized) or Zinc-Iron Alloy-Coated (Galvannealed) by the Hot-Dip Process.
- .4 ASTM A 924/A 924M-[09], Standard Specification for General Requirements for Steel Sheet, Metallic-Coated by the Hot-Dip Process.

.2 Canadian General Standards Board (CGSB)
- .1 CAN/CGSB-1.81-[M90], Air Drying and Baking Alkyd Primer for Vehicles and Equipment.
- .2 CAN/CGSB-1.88-[92], Gloss Alkyd Enamel, Air Drying and Baking.
- .3 CGSB 31-GP-107MA-[90], Non-inhibited Phosphoric Acid Base Metal Conditioner and Rust Remover.
- .4 CAN?CGSB-12.5, Mirrors, Silvered.

.3 CSA International
- .1 CAN/CSA-B651-[04], Accessible Design for the Built Environment.
- .2 CAN/CSA-G164-[M92(R2003)], Hot Dip Galvanizing of Irregularly Shaped Articles.

1.2 ACTION AND INFORMATIONAL SUBMITTALS

.1 Submit submittals in accordance with Section 01 33 00 - Submittal Procedures.

.2 Product Data:
- .1 Provide manufacturer's printed product literature and data sheets and include product characteristics, performance criteria, physical size, finish and limitations.

.3 Shop Drawings:
- .1 Indicate size and description of components, base material, surface finish inside and out, hardware and locks, attachment devices, description of rough-in-frame, building-in details of anchors for grab bars.

.4 Closeout Submittals:
- .1 Provide maintenance data for toilet and bath accessories for incorporation into manual specified in Section 01 78 00 - Closeout Submittals.
- .2 Tools:
  - .1 Provide special tools required for assembly, disassembly or removal for toilet and bath accessories in accordance with requirements specified in Section 01 78 00 - Closeout Submittals.
  - .2 Deliver special tools to Owner Representative.

1.3 DELIVERY, STORAGE AND HANDLING

.1 Deliver, store and handle materials in accordance with Section 01 61 00 - Common Product Requirements and in accordance with manufacturer's written instructions.

.2 Delivery and Acceptance Requirements:
- .1 Deliver materials to site in original factory packaging, labelled with manufacturer's name and

address.

.3 Storage and Handling Requirements:
- .1 Store materials indoors in dry location and in accordance with manufacturer's recommendations in clean, dry, well-ventilated area.
- .2 Store and protect toilet and bath accessories from nicks, scratches, and blemishes.
- .3 Replace defective or damaged materials with new.

PART 2 Products

2.1 MATERIALS

.1 Sheet steel: commercial quality to ASTM A653/A653M with ZF001 designation zinc coating.

.2 Stainless steel sheet metal: to ASTM A167, Type 304 with BA finish.

.3 Stainless steel tubing: Type 304, commercial grade, seamless welded, 1.2 mm wall thickness.

.4 Fasteners: concealed screws and bolts hot dip galvanized, exposed fasteners to match face of unit. Expansion shields fibre, lead or rubber as recommended by accessory manufacturer for component and its intended use.

2.2 COMPONENTS

.1 Toilet tissue dispenser (TTD):
- .1 Description: Multi-roll dispenser, Dispense two standard-core toilet tissue rolls up to 13.3cm diameter. Extra roll shall automatically drop in place when bottom roll is depleted. surface mounted, keyed flush tumbler lock.
- .2 Dimensions: 18.5 cm high x 15.5 cm wide x 15 cm deep.
- .3 Standard of acceptance: Bobrick, Model: B-4288.

.2 Paper towel dispenser (PTD):
- .1 Touch-Free pull towel dispenser, stub roll automatic transfer mechanism, constructed of tough resins and stainless steel.
- .2 Capacity: 1 - 20.5 cm diameter roll towel, plus 1- 9 cm diameter stub roll.
- .3 Dimensions: 29.5 cm x 38 cm x 22.5 cm.
- .4 Mounting Height: 1300-1400mm centre above floor.
- .5 Standard of Acceptance: Bobrick, Model: B-2860.

.3 Soap dispenser (SD):
- .1 Description: push cover bulk soap dispenser with removable reservoir.
- .2 Material: Stainless steel with satin finish.
- .3 Capacity: 1200 ml
- .4 Standard of acceptance: Bobrick, Model: B-4112.

.4 Garbage Bin (TC):
- .1 Description: Surface mounted garbage bin with heavy-gauge vinyl removable rigid liner.
- .2 Material: Stainless Steel with satin finish
- .3 Mounting: minimum 915mm above finished floor.
- .4 Standard of Acceptance: Bobrick, Model: B-279.

.5 Feminine napkin disposal bin (SND):
- .1 Description: Surface mounted napkin receptacle with integral finger depression for opening cover.
- .2 Material: Stainless Steel with satin finish
- .3 Mounting: minimum 300mm above finished floor.
- .4 Standard of Acceptance: Bobrick, Model: B-270.

.6 Mirrors (LM):
- .1 Plate glass 4.0 mm to CAN/CGSB-12.5, Stainless steel frame, electrolytically copper plated and guaranteed against silver spoilage for 10 years, concealed fasteners for mounting. Sizes as indicated on drawings.
- .2 Standard of Acceptance:
  - .1 Flat: Bobrick, Model B-165

.7 Grab bars (Straight) (GB-1.3):
- .1 Description: 32 mm dia x 1.2 mm wall tubing of Type 304 stainless steel, 38 mm diameter wall flanges, concealed screw attachment, flanges welded to tubular bar, provided with steel back plates and all accessories. no. 4 satin finish with knurl/peened bar at area of hand grips. Grab bar material and anchorage to withstand downward pull of 2.2 kN.
- .2 Sizes: as indicated on drawings.
- .3 Standard of Acceptance: Bobrick, Model 5806.99.

.8 Grab bars (90 Deg.) (GB-1.L):
- .1 Description: 32 mm dia x 1.2 mm wall tubing of Type 304 stainless steel, 38 mm diameter wall flanges, concealed screw attachment, flanges welded to tubular bar, provided with steel back plates and all accessories. no. 4 satin finish with knurl/peened bar at area of hand grips. Grab bar material and anchorage to withstand downward pull of 2.2 kN.
- .2 Sizes: as indicated on drawings.
- .3 Standard of Acceptance: Bobrick, Model 5898.99.

.9 SS Shelf (SSL):
- .1 Description: Surface mounted. Flanges and support arms shall be 22 gauge and equipped with concealed mounting brackets.
- .2 Material: Stainless Steel
- .3 Sizes: 61 cm x 14.5 cm
- .4 Standard of Acceptance: Bobrick, Model B-683.

.10 Clothes Hook (CHK-1.0):
- .1 Description: Wall mounted all welded construction
- .2 Material: Stainless Steel
- .3 Standard of Acceptance: Bobrick, Model B-233.

.11 Soap Dish (SSD):
- .1 Description: Surface Mounted. Concealed mounting bracket. All-welded construction..
- .2 Material: Stainless Steel
- .3 Standard of Acceptance: Bobrick, Model B-6807.

.12 Shower Curtains (SCR):
- .1 Description:
  - .1 Curtain: Matte white vinyl 0.2mm thick containing antibacterial and flame-retardant agents. Nickel-plated brass grommets every 150mm. Bottom and side hemmed.
  - .2 Rod: 30mm dia, Extra Heavy Duty type 304 Stainless steel tubing.
  - .3 Curtain Hooks: Type 304 Stainless Steel curtain hook.
- .2 Standard of Acceptance:

.1 Curtain: Bobrick, Model B-240-3.
.2 Rod: Bobrick, Model B-6047
.3 Curtain Hooks: Bobrick, Model B-204-1

2.3 FABRICATION

.1 Weld and grind joints of fabricated components flush and smooth. Use mechanical fasteners only where approved.

.2 Wherever possible form exposed surfaces from one sheet of stock, free of joints.

.3 Brake form sheet metal work with 1.5 mm radius bends.

.4 Form surfaces flat without distortion. Maintain flat surfaces without scratches or dents.

.5 Back paint components where contact is made with building finishes to prevent electrolysis.

.6 Hot dip galvanize concealed ferrous metal anchors and fastening devices to CSA G164.

.7 Shop assemble components and package complete with anchors and fittings.

.8 Deliver inserts and rough-in frames to job site at appropriate time for building-in. Provide templates, details and instructions for building in anchors and inserts.

.9 Provide steel anchor plates and components for installation on studding and building framing.

2.4 FINISHES

.1 Chrome and nickel plating: to ASTM B456, satin or polished finish.

.2 Manufacturers brand names on face of units not acceptable.

PART 3 EXECUTION

3.1 EXAMINATION

.1 Verification of Conditions: verify that conditions of substrates and surfaces to receive toilet and bathroom accessories previously installed under other Sections or Contracts are acceptable for product installation in accordance with manufacturer's instructions prior to toilet and bathroom accessories installation.

.2 Inform Consultant of unacceptable conditions immediately upon discovery.

.3 Proceed with installation only after unacceptable conditions have been remedied.

3.2 INSTALLATION

.1 Install and secure accessories rigidly in place as follows:
.1 Stud walls: install steel back-plate to stud prior to plaster or drywall finish. Provide plate with threaded studs or plugs.
.2 Hollow masonry units, existing plaster or drywall: use toggle bolts drilled into cell or wall cavity.
.3 Solid masonry, marble, stone or concrete: use bolt with lead expansion sleeve set into drilled

hole.

.2 Install grab bars on built-in anchors provided by bar manufacturer.

.3 Use tamper proof screws/bolts for fasteners.

.4 Fill units with necessary supplies shortly before final acceptance of building.

.5 Install mirrors in accordance with manufacturer’s recommendations.

3.3 ADJUSTING

.1 Adjust toilet and bathroom accessories components and systems for correct function and operation in accordance with manufacturer's written instructions.

.2 Lubricate moving parts to operate smoothly and fit accurately.

3.4 CLEANING

.1 Progress Cleaning: clean in accordance with Section 01 74 11 - Cleaning.
  .1 Leave Work area clean at end of each day.

.2 Final Cleaning: upon completion remove surplus materials, rubbish, tools and equipment in accordance with Section 01 74 11 - Cleaning.

3.5 PROTECTION

.1 Protect installed products and components from damage during construction.

.2 Repair damage to adjacent materials caused by metal locker installation.

END OF SECTION

GENERAL

1.1 REFERENCES

.1 The Aluminum Association (AA)
  .1 AA DAF-45-R2003, Designation System for Aluminum Finishes - 9th Edition.

.2 ASTM International
  .1 ASTM A 53/A 53M-10, Standard Specification for Pipe, Steel, Black and Hot-Dipped, Zinc-Coated Welded and Seamless.
  .2 ASTM A 123/A 123M-09, Standard Specification for Zinc (Hot-Dip Galvanized) Coatings on Iron and Steel Products.
  .3 ASTM A 480/A 480M-10a, Standard Specification for General Requirements for Flat-Rolled Stainless and Heat-Resisting Steel Plate, Sheet, and Strip.
  .4 ASTM B 241/B 241M-02, Standard Specification for Aluminum and Aluminum-Alloy Seamless Pipe and Seamless Extruded Tube.

.3 Canada Green Building Council (CaGBC)
  .1 LEED Canada-NC Version 1.0-2004, LEED (Leadership in Energy and Environmental Design): Green Building Rating System Reference Package For New Construction and Major Renovations (including Addendum 2007).

.4 Master Painters Institute (MPI)
  .1 Architectural Painting Specification Manual - current edition.

.5 U.S. Environmental Protection Agency (EPA) / Office of Water
  .1 EPA 832/R-92-005, Storm Water Management for Construction Activities: Developing Pollution Prevention Plans and Best Management Practices.

1.2 ACTION AND INFORMATIONAL SUBMITTALS

.1 Submit in accordance with Section 01 33 00 - Submittal Procedures.

.2 Product Data:
  .1 Submit manufacturer's instructions, printed product literature and data sheets for [flag poles] and include product characteristics, performance criteria, physical size, finish and limitations.

.3 Shop Drawings:
  .1 Submit drawings stamped and signed by professional engineer registered or licensed in Province of Ontario, Canada.

.4 Indicate dimensions, finishes, base jointing, anchoring and support systems, cleats, halyard boxes, trucks, finials and base collar for flagpoles.

.5 Submit electronic copies of drawings of flagploes and bases, showing general layout, jointing and complete anchoring and supporting systems.

.6 Samples:
  .1 Submit 1 sample 300mm long of flagpole.

.7 Manufacturer's Instructions: submit manufacturer's installation instructions for each type of flagpole.

1.3 QUALITY ASSURANCE

.1 Provide each flagpole as complete unit produced by single manufacturer, including fittings, accessories, bases and anchorage devices.

1.4 DELIVERY, STORAGE AND HANDLING

.1 Deliver, store and handle materials in accordance with Section 01 61 00 - Common Product Requirements and with manufacturer's written instructions.

.2 Delivery and Acceptance Requirements: deliver materials to site in original factory packaging, labelled with manufacturer's name and address.
- .1 Spiral wrap each flagpole with heavy kraft paper, wood strip and steel band, or polyethylene wrap and pack in tubing for shipment.
- .2 Ship flagpole to installation site in one piece.

1.5 STORAGE AND HANDLING REQUIREMENTS:

.1 Store materials off ground in dry location and in accordance with manufacturer's recommendations in clean, dry, well-ventilated area.

.2 Store and protect flagpoles from nicks, scratches, and blemishes.

.3 Replace defective or damaged materials with new.

.4 Develop Construction Waste Management Plan Waste Reduction Workplan related to Work of this Section.

.5 Packaging Waste Management: remove for reuse and return by manufacturer of pallets, crates, padding and packaging materials as specified in Construction Waste Management Plan, Waste Reduction Workplan in accordance with Section 01 74 19 - Waste Management and Disposal.

PART 2 PRODUCTS

2.1 MATERIALS

.1 Aluminum:
- .1 Aluminum Association alloy AA 6063-T5 seamless extruded aluminum tubing.
- .2 Fabricated from seamless extruded tubing in accordance with ASTM B 241, alloy 6063 T6, having minimum tensile strength not less than 20 MPa and a yield point of 17 MPa. Heat treated and age hardened after fabrication.

.2 Isolation coating: alkali-resistant bituminous paint or epoxy resin solution.

2.2 DESIGN CRITERIA

.1 Flagpole, bases and anchorage devices to resist minimum wind velocity of 145 km/h un-flagged, 100 km/h flagged.

2.3 FABRICATION

.1 Fabricate flagpole as complete unit including base mounting brackets anchorage and fittings.

.2 Cone tapered flagpole:
- .1 Seamless, uniform, straight line tapered section above cylindrical butt section.
- .2 Taper: Per manufacturer’s standard rate of taper.
- .3 Provide internal splicing, self-aligning sleeve of same material as flagpole for snug fitting, watertight field joints.

.3 Weld in accordance to appropriate CSA Standard, by welders certified by Canadian Welding Bureau. Finish exposed welds flush and smooth.

2.4 ACCESSORIES

.1 Finial: Diameter of ball to match pole butt diameter, 1.6 mm minimum thick, aluminum to match flagpole finish.

.2 Internal Revolving Truck Assembly: Cast aluminum two-piece enclosed body, revolving, non-fouling design, single aluminum pulley mounted inside hood, stainless steel roller bearings, brass exit bushing for wire cable, and threaded aluminum spindle for attachment to top of pole. Finish to match flagpole.

.3 Internal Halyard Winch System: Provide one (1) complete internal halyard 1/8” stainless steel wire cable assembly with plastic coated counterweight and beaded sling assembly. A manually operated mechanical winch having automatic brake system and operated with a removable hand crank will be concealed inside the flagpole behind a flush access door having a cylinder lock.

.4 Halyard Swivel snaps: Two (2) stainless steel swivel snap hooks with neoprene covers.

.5 Flash Collar: Provide Spun Aluminum Collar to match flagpole.

2.5 FINISHES

.1 Aluminum:
- .1 Finish exposed surfaces of aluminum components in accordance with AA DAF-45.
  - .1 Clear anodic finish: designation AA M32-C22-A41.
- .2 Appearance and properties of anodized finishes designated by the Aluminum Association as Architectural Class 1, Architectural Class 2, and Protective and Decorative.

2.6 FIELD FABRICATION

.1 Fabricate ground-set foundation assembly for manual tilt installation of flagpole as indicated. Include locking lug on tilt pole.

.2 Fabricate mountings of same metal as flagpoles where exposed.

PART 3 EXECUTION

3.1 EXAMINATION

.1 Verification of Conditions: verify that conditions of substrate previously installed under other Sections or Contracts are acceptable for flagpole installation in accordance with manufacturer's written instructions.

.1 Visually inspect substrate in presence of Consultant.
.2 Inform Consultant of unacceptable conditions immediately upon discovery.
.3 Proceed with installation only after unacceptable conditions have been remedied and after receipt of written approval to proceed from Consultant.

3.2 INSTALLATION

.1 Shop apply isolation coating to metal surfaces of flagpole and base that will be encased in concrete.

.2 Install flagpoles, base assemblies and fittings to shop drawings and manufacturer's instructions.

.3 Provide ground stakes 19mm x 457mm long, for positive lightning ground for each ground set flagpole installation.

.4 Check and adjust installed fittings for smooth operation of halyards.

3.3 CLEANING

.1 Progress Cleaning: clean in accordance with Section 01 74 11 - Cleaning.

.2 Leave Work area clean at end of each day.

.3 Final Cleaning: upon completion remove surplus materials, rubbish, tools and equipment in accordance with Section 01 74 11 - Cleaning.

.4 Waste Management: separate waste materials for reuse and recycling in accordance with Section 01 74 21 - Construction/Demolition Waste Management and Disposal.

.5 Remove recycling containers and bins from site and dispose of materials at appropriate facility.

3.4 PROTECTION

.1 Protect installed products and components from damage during construction.

.2 Repair damage to adjacent materials caused by flagpole installation.

END OF SECTION

PART 1 General

1.1 WORK INCLUDED IN THIS SECTION

.1 The work of this section includes, but not necessarily limited to, the supply and installation of the following:
- .1 Washroom countertops.
- .2 Cut-outs for sinks.
- .3 All miscellaneous items required to complete the work of this section.

.2 Cooperate with the Mechanical trade for installation and connection of services.

1.2 REFERENCE STANDARDS

.1 ASTM International
- .1 ASTM A167-99: Specification for Stainless & Heat Resistant Chromium Nickel Steel
- .2 ASTM E478-[08], Standard Test Methods for Chemical Analysis of Copper Alloys.
- **.3** ASTM A1008/A1008M Specification for Steel, Sheet, Cold Rolled.

1.3 QUALITY ASSURANCE

.1 Manufacturer shall have a minimum of 15 years of continued experience and have successfully completed other laboratory projects of similar size and complexity.

.2 Workmanship shall be of the highest quality in accordance with the drawings, specifications and industry standards.

.3 Deviations from the specifications are subject to written approval. Right is reserved to require all Work to be performed as specified and drawn regardless of the fact that such requirements are at variance with the manufacturer's standard procedures.

1.4 SUBMITTALS

.1 Shop Drawings:
- .1 Submit shop drawings in accordance with Division 1
- .2 Shop drawings shall clearly show each unit in plan and elevation, details of benching, construction and sections.
- .3 "Ditto" or "Mirror Image" elevations are not acceptable. Similar or repetitious elevations shall be repeated and included in the shop drawings.
- .4 Shop drawings shall clearly show location for rough-in of plumbing, including sinks, and faucets.

.2 Submit duplicate samples of:
- **.1** Countertop material, 300 x 300 mm including external corner.

1.5 DELIVERY, STORAGE AND PROTECTION

.1 Product delivery should only take place after painting, utility rough-ins and flooring is complete.

.2 Product will not be delivered or installed until the site conditions as specified in Part 3 Installation Section are met.

.3 The supplier of the countertop is responsible for removing any waste or refuse resulting from the work. Trash containers are to be provided by others.

.4 Protect all work with suitable heavy wrappings. Report to Construction Manager any damage caused by other trades.

1.6 PROJECT SITE CONDITIONS

.1 Building must be enclosed, windows and doors sealed and weather tight.

.2 An operational HVAC system that maintains temperature and humidity at occupancy levels must be in place.

.3 Ceiling, overhead ductwork and lighting must be installed prior to installation of the countertop.

.4 Flooring shall be installed prior to installation of countertop.

.5 Wall Tile shall be installed prior to installation of countertop.

.6 Required backing and reinforcements must be installed ready for installation.

PART 2 Products

2.1 MATERIALS

.1 Stainless Steel: to ASTM A167-99

2.2 COUNTERTOPS

.1 Stainless Steel Countertops (Code **SST**)
- .1 Shall be fabricated from Type 304-16ga stainless steel with a No.4 satin polished finish.
- .2 Countertops shall be a top hat channel construction with sound deadening.
- .3 Splash backs shall be integral with top and have a coved junction. Provided integral return splash backs where tops abuts wall.
- .4 Countertops with sinks shall have a raised marine edge on exposed sides and sinks shall be integrally welded into the countertop.
- .5 Countertops that are too big to access the room in one piece shall have water tight slip joints.
- .6 There shall be no evidence of spot welds and all joints/welds shall be polished to a No.4 stain finish.

PART 3 EXECUTION

3.1 INSTALLERS

.1 Installation shall be performed by a factory authorized representative.

3.2 SITE EXAMINATION

.1 An operational HVAC system that maintains temperature and humidity at occupancy levels must be in place.

.2 Ceiling, overhead ductwork and lighting must be installed prior to installation of the countertop.

.3 Flooring shall be installed prior to installation of countertop.

.4 Wall Tile shall be installed prior to installation of countertop.

.5 Required backing and reinforcements must be installed ready for casework installation.

.6 Countertop delivery and installation shall not start until the above conditions have been met.

3.3 INSTALLATION

.1 Components shall be set plumb, straight and square, securely anchored to building structure.

.2 Accurately scribe and fit components to irregular surfaces.

.3 At the meeting of bench tops and splash-backs to walls seal joints with a continuous bead of caulking.

.4 Countertop joints shall be flush and not exceed 1/8”.

.5 Casework hardware shall be adjusted and aligned after installation.

.6 Clean all surfaces including countertops and touch up as necessary.

.7 Countertops shall be protected by cardboard or plastic covering.

END OF SECTION

PART 1 GENERAL

1.1 REFERENCES

.1 ASTM A240/4 240M: Standard Specification for Chromium and Chromium-Nickel, Stainless Steel Plate, sheet and strip for general applications..

.2 ASTM A 480S 480M: Standard Specification for general requirements for flat-rolled Stainless & Heat Resistant Steel Plate, Sheet & Strip.

1.2 SUBMITTALS

.1 Provide submittals in accordance with Section 01 33 00.

.2 Product Data: Product data for each type of floor grid and frame specified, including manufacturer's specifications and installation instructions:

.3 Shop drawings in sufficient detail showing layout of grid and frame specified including details indicating construction relative to materials, direction of traffic, spline locations, profiles, anchors and accessories.

.4 Samples for verification purposes: Submit an assembled section of floor grid and frame members with selected tread insert showing each type of color for exposed floor grid, frame and accessories required.

.5 Maintenance data in the form of manufacturer's printed instructions for cleaning and maintaining floor grids.

.6 Slip resistance in accordance with ASTM D-2047-96, Coefficient of Friction, minimum 0.60 for accessible routes.

.7 Standard rolling load performance is 500 lb./wheel (load applied to a solid 5” x 2” wide polyurethane wheel, 1000 passes without damage).

.8 Single source responsibility: Obtain floor grids and frames from one source of a single manufacturer.

.9 Utilize structural stainless steel Type 304 components.

1.3 DELIVERY, STORAGE AND HANDLING

.1 Deliver materials to the project site ready for use and fabricated in as large sections and assemblies as practical, in unopened original factory packaging clearly labeled to identify manufacturer.

1.4 PROJECT CONDITIONS

.1 Field measurements: Check actual openings for grids by accurate field measurements before fabrication. Record actual measurements on final shop drawings. Coordinate fabrication schedule with construction progress to avoid delay of work. As stainless steel grids re not field adjustable, order with factory template service to ensure stainless steel grids are manufactured to the right dimension in the factory.

.2 Coordinate frame installation with concrete construction to ensure recess and frame anchorage are accurate and that the base is level and flat. Defer frame installation until building enclosure is complete and related interior finish work is in progress.

PART 2 PRODUCTS

2.1 ACCEPTABLE MANUFACTURER

.1 Specification is based on model Pedigrid manufactured by Construction Specialties. unless otherwise indicated.

2.2 MATERIALS

.1 Aluminum:
- .1 Floor Grid: Aluminum Association alloy AA 6061-T6.
- .2 Floor Frame: Aluminum Association alloy AA 6063-T5.

2.3 FLOOR GRIDS

.1 Manufactured from 6061-T6 Aluminum tread bars in 38.10mm, depth, joined together with 3/8” (9.525 mm) diameter threaded steel rods, with nylon spacers at centers as required. Extra slip-resistant aluminum oxide grit is imbedded in a factory-applied epoxy filler. Unit must withstand 500 lb./ wheel loads (load applied to a solid 5" x 2" wide polyurethane wheel, 1000 passes without damage. Clear anodized mill finish
- .1 Basis-of-Design:
  - .1 Model: G1
  - .2 Frame Type: Level Base w/ Drain Pan (No Drain)
  - .3 Pan Type: 16ga. Aluminum
  - .4 Rail: Serrated Aluminum

2.4 GRID FRAMES

.1 Extruded aluminum frame shall be 6063-T5 alloy, corners to be neatly mitred and held together with corner brackets. Clear anodized mill finish

2.5 LOCK DOWN MECHANISM

.1 Hidden Lock Down 47.62mm x 25.4mm x 3.175mm type304 stainless steel hold down plate to secure Gridline to concrete surface.

PART 3 EXECUTION

3.1 EXAMINATION

.1 Verification of conditions: Examine areas and conditions under which work is to be performed and identify conditions detrimental to proper or timely completion.

.2 Do not proceed until unsatisfactory conditions have been corrected.

3.2 PREPARATION

.1 Manufacturer shall offer assistance and guidance to provide a template of grid assemblies to ensure a proper installation.

3.3 INSTALLATION

.1 Install the work of this section in strict accordance with the manufacturer's recommendations.

.2 Set grid type at height recommended by manufacturer for most effective cleaning action.

.3 Coordinate top of grid surfaces with bottom of doors that swing across to provide ample clearance between door and grid.

3.4 CLEANING

.1 Clean the tread surface and recessed well in accordance with Section 01 74 11.

3.5 PROTECTION

.1 After completing required frame installation and concrete work, provide temporary filler of plywood or fiberboard in recesses, and cover frames with plywood protective flooring. Maintain protection until construction traffic has ended and project is near time of Substantial Performance.

.2 Defer installation of floor grids until time of substantial completion of project.

END OF SECTION

SPECIFICATIONS

Project Name

Volunteer Fire Station

Municipality of Casselman
745 Brébeuf
Casselman, ON

Volume 2 – Specifications
Division 21-33

Mechanical, Electrical, Exterior

Issued for Tender

Project Number	Date
19628	**March 10, 2020**

Sault Ste. Marie
705.949.5291
421 Bay St. Suite 507
Sault Ste. Marie, ON, P6A 1X3

IDEA
INTEGRATED DESIGN
ENGINEERING + ARCHITECTURE

Ottawa
613.728.0008
595 Byron Avenue
Ottawa, ON K1A 4C4

PART 1 GENERAL

1.1 SUMMARY

.1 This section cover the general requirements for the Mechanical systems. Read all divisions of the building specifications.

.2 The mechanical work shall consist of the supply and installation of complete and operable systems and shall include all necessary labour, plant, materials and incidentals for the work involved.

.3 The mechanical work shall include all of Division, 21, 22 and 23 as noted on the drawings and specifications.

.4 Refer to the electrical and controls drawings and specification and note exact scope of work required by mechanical trades.

1.2 RELATED SECTIONS

.1 Section 01 33 00 - Submittal Procedures.

.2 Section 01 61 00 - Common Product Requirements

.3 Section 01 78 00 - Closeout Submittals

.4 Section 01 45 00 - Quality Control

.5 Section 08 31 00 – Access Doors – Mechanical & Electrical

.6 Section 09 91 23 - Interior Painting

.7 Section 23 05 93 - Testing, Adjusting and Balancing for HVAC

1.3 REFERENCES

.1 General:
- .1 All references, codes, regulation, by-laws, etc. as noted in the Specification for Divisions 21, 22 and 23 shall be the latest edition / revision, except where specific editions are specified.

1.4 SUBMITTALS

.1 Submittals: in accordance with Section 01 33 00 - Submittal Procedures.

.2 Shop drawings; submit drawings to the engineer for all equipment as outlined in the specifications and on the Mechanical drawings.

.3 Shop drawings to show (as a minimum) (refer to equipment specification sections for details):
- .1 Make & Model Number.
- .2 Capacity.
- .3 Dimensions.
- .4 Installation arrangement.
- .5 Plan View and sections.
- .6 Weights.

.7 Operating characteristics.
.8 Operating Performance.
.9 Performance curves showing the operating point of the equipment.
.10 Piping hook-ups.
.11 Construction details.
.12 Energy Efficiency Ratings.
.13 Sound Data.
.14 Mounting arrangements.
.15 Operating and maintenance clearances.
.16 Installation instructions.
.17 Electrical data and characteristics.
.18 Motor duty.
.19 Motor brand and model no.
.20 l miscellaneous equipment and accessories to complete the system.
.21 Schematic Flow Diagrams.
.22 Approvals.

.4 Shop drawings and product data accompanied by:
.1 Detailed drawings of bases, supports, and anchor bolts.
.2 Acoustical sound power data, where applicable.
.3 Points of operation on performance curves.
.4 Manufacturer to certify current model production.
.5 Certification of compliance to applicable codes.

.5 In addition to transmittal letter referred to in Section 01 33 00 - Submittal Procedures use "Shop Drawing Submittal Stamping Sheet". Identify section and paragraph number.

.6 The mechanical contractor shall ensure that equipment has been checked for conformance with all the requirements of the drawings and specifications and that the equipment has been coordinated with other equipment to which it is attached or connected, and that all dimensions have been verified to ensure the proper installation of equipment within the available space without interference with the work of other trades. All information on the shop drawings such as wiring diagrams, accessories and details must be specifically prepared for this project. Shop drawing containing information irrelevant to this project will be rejected for resubmission. Make sure that electrical, controls and structural co-ordination is complete before submitting drawings for approval

.7 Closeout Submittals:
.1 Provide operation and maintenance data for incorporation into manual specified in Section 01 78 00 - Closeout Submittals.
.2 Operation and maintenance manual approved by, and final copies deposited with, Consultant before final inspection.
.3 Operation data to include:
.1 Control schematics for systems including environmental controls.
.2 Description of systems and their controls.
.3 Operation instruction for systems and component.
.4 Description of actions to be taken in event of equipment failure.
.5 Valves schedule and flow diagram.
.6 Colour coding chart.
.4 Maintenance data to include:
.1 Servicing, maintenance, operation and trouble-shooting instructions for each item of equipment.
.2 Data to include schedules of tasks, frequency, tools required and task time.
.5 Performance data to include:

.1 Equipment manufacturer's performance datasheets with point of operation as left after commissioning is complete.
.2 Equipment performance verification test results.
.3 Special performance data as specified.
.4 Testing, adjusting and balancing reports as specified in Section 23 05 93 - Testing, Adjusting and Balancing for HVAC.

.6 Approvals:
.1 Submit 2 copies of draft Operation and Maintenance Manual to Consultant for approval. Submission of individual data will not be accepted unless directed by Consultant.
.2 Make changes as required and re-submit as directed by Consultant.

.7 Additional data:
.1 Prepare and insert into operation and maintenance manual additional data when need for it becomes apparent during specified demonstrations and instructions.

.8 Site records:
.1 Engineer will provide 1 set of reproducible mechanical drawings. Mark changes as work progresses and as changes occur.
.2 Transfer information weekly to reproducibles, revising reproducibles to show work as actually installed.
.3 Use different colour waterproof ink for each service.
.4 Make available for reference purposes and inspection.

.9 As-built drawings:
.1 Prior to start of Testing, Adjusting and Balancing for HVAC, finalize production of as-built drawings.
.2 Identify each drawing in lower right hand corner in letters at least 12 mm high as follows: - "AS BUILT DRAWINGS: THIS DRAWING HAS BEEN REVISED TO SHOW MECHANICAL SYSTEMS AS INSTALLED" (Signature of Contractor) (Date).
.3 Submit to Engineer for approval and make corrections as directed.
.4 Perform testing, adjusting and balancing for HVAC using as-built drawings.
.5 Submit completed reproducible as-built drawings with Operating and Maintenance Manuals.

.10 Submit copies of as-built drawings for inclusion in final TAB report.

1.5 QUALITY ASSURANCE

.1 Quality Assurance: in accordance with Section 01 45 00 - Quality Control.

1.6 MAINTENANCE

.1 Furnish spare parts in accordance with Section 01 78 00 - Closeout Submittals as follows:
.1 One filter cartridge or set of filter media for each filter or filter bank in addition to final operating set.

1.7 DELIVERY, STORAGE, AND HANDLING

.1 Material Delivery Schedule: coordinate delivery of material to suit proposed construction schedule.

.2 Construction/Demolition Waste Management and Disposal: separate waste materials in accordance with Section 01 74 19 - Waste Management and Disposal.

.3 Building Loads
.1 Before loading any part of the structure, make sure that the construction is sufficiently

complete and that concrete has attained sufficient strength to support such loads.

1.8 SYSTEM STARTUP

.1 Instruct Consultant and operating personnel in operation, care and maintenance of systems, system equipment and components.

.2 Arrange and pay for services of manufacturer's factory service technician to supervise start-up of installation, check, adjust, balance and calibrate components and instruct operating personnel.

.3 Provide these services for such period, and for as many visits as necessary to put equipment in operation, and ensure that operating personnel are conversant will aspects of its care and operation.

1.9 OPERATING INSTRUCTIONS AND MAINTENANCE DATA

.1 Provide for each system and principal item of equipment as specified in technical sections for use by operation and maintenance personnel.

.2 Operating instructions to include the following:

- .1 Wiring diagrams, control diagrams, and control sequence for each principal system and item of equipment.
- .2 Start up, proper adjustment, operating, lubrication, and shutdown procedures.
- .3 Safety precautions.
- .4 Procedures to be followed in event of equipment failure.
- .5 Other items of instruction as recommended by manufacturer of each system or item of equipment.

.3 Names and addresses of nearest suppliers for all items included in maintenance manuals.

.4 Print operating instructions and frame under glass or in approved laminated plastic.

.5 Post instructions where directed.

.6 For operating instructions exposed to weather, provide weather-resistant materials or weatherproof enclosures.

.7 Ensure operating instructions will not fade when exposed to sunlight and are secured to prevent easy removal or peeling.

PART 2 PRODUCTS

2.1 MATERIALS

.1 Provide material and equipment in accordance with Section 01 61 00 - Common Product Requirements

.2 This section covers the materials and methods of workmanship of items that are common to more than one section of division 21, 22, and 23.

.3 Verify installation and co-ordination responsibilities related to equipment and controls, as indicated.

.4 Access doors in ducts: Refer to 08 31 00

.1 Manufactured from 2mm core thickness galvanized steel, c/w galvanized concealed hinges, positive locking screwdriver or cam lock, include neoprene sponge air seal all around.
.2 Standard of acceptance: Acudor, Miami Carey, Air-O-Metal, Krugar, Maxam, Nailor.

.5 Other access doors: Refer to 08 31 00
.1 Flush mounted 610mmx610mm for body entry and 305mmx305mm or hand entry unless otherwise noted. Doors shall open 180°, have rounded safety corners, concealed hinges, screwdriver latches and anchor straps. Steel shall be prime coated. Doors in fire rated assemblies shall be fire rated.
.2 Standard of acceptance: Le Hage, Zurn, Acudor, Maxam.

PART 3 – EXECUTION

3.1 EQUIPMENT REQUIREMENTS AND INSTALLATION

.1 Comply with division 1 for coordination of the work with other trades.

.2 Carry out complete installation in such a manner that will permit equipment maintenance and disassembly by use of unions or flanges, will minimize disturbance to connecting piping and duct systems and will be free of interference with building structure or other equipment.

.3 Extend inaccessible lubricating connections and sight glasses to accessible locations outside of housings or other restricted access spaces.

.4 Install base mounted equipment on concrete housekeeping pads with chamfered edges. Make pads a minimum of 100mm high and 50mm larger than the equipment base dimensions all around.

.5 Provide drain lines from equipment into local floor drains.

.6 Line-up equipment, floor plates and ceiling plates with building walls wherever possible.

.7 Assist the Electrical Trade to ensure proper connection, correct thermal overload selection, correct stop-start controls and interlocking.

.8 Rigidly comply with manufacturer's instructions and recommendations for the installation of equipment. Where required, arrange and pay for the manufacturers' field engineer to supervise the installation of the equipment.

3.2 HANGERS & SUPPORTS

.1 .1 Fabricate hangers, supports and sway braces in accordance with ANSI B31.1 and requirements of ULC C203.

.2 Set inserts in position in advance of concrete work.

.3 Support all equipment and piping from structural members. Where structural supports do not exist or inserts are not in suitable locations, suspend hangers from steel channels or angles. Provide supplementary structural members. Obtain approval before using expansion shields. Use minimum two shields for each hanger. **Do not suspend from metal deck.** Anchoring of piping and equipment shall be to manufacturers recommendations. Provide special supports for equipment where required, fabricated from welded steel structural members. Provide shop drawings and obtain their approval when requested.

.4 Provide split adjustable steel ring hangers on piping NPS 50mm dia. and under and clevis type for NPS greater than 50mm dia. Use roller type hangers as required.

.5 Provide rigid hangers, swing hangers or pipe rollers complete with bracing for steam, hot & chilled water supply and return, domestic hot & cold water and hot water recirculation pipes in accordance with the following:

.6 Hanger Type Rigid Swing Pipe Roller

.7 Pipe expansion to <1/24 1/24-1/6 >1/6

.8 hanger rod length

.9 Minimum rod length 305mm 305mm 305mm

.10 Provide pipe roller stand on supplementary structural members where hangers cannot be used.

.11 Provide spring hangers where required to offset expansion on horizontal runs which follow long vertical risers.

.12 Use the smallest pipe size to determine spacing between pipe rack supports.

.13 Use rod diameters and support spacing as shown in the following table except where specified otherwise:

.14 Rod Diameter and Support Spacing Table

1.1 Maximum Support Spacing

Pipe Size (Nominal)	Rod Diameter	Steel Pipe	Copper Pipe
15mm	8mm	-	1525mm
20mm – 25mm	9.5mm	1830mm	1830mm
32mm	9.5mm	1830mm	1830mm
40mm	9.5mm	2750mm	2440mm
50mm	9.5mm	3050mm	2750mm
65mm – 80mm	9.5mm	3660mm	3050mm

.15 Support plumbing piping in accordance with the more stringent requirements of authorities having jurisdiction, plumbing code, or as specified above.

.16 Place support within 300mm of each horizontal elbow and within 600mm of each side of valve or tee.

.17 Mild steel wall hooks may be used to support non-expanding piping. Allow 25mm minimum clearance for insulated pipe.

.18 Provide riser clamps for all risers unless detailed otherwise.

.19 Uninsulated copper piping, use copper hangers or 6mm lead crimped to hanger between copper and ferrous hanger.

.20 Provide insulation saddles for insulated pipe and prefabricated insulation shields with high density insulation. Grinnel Fig. Nos. 160 to 167.

.21 Offset hanger pipe and structural attachments in such a manner that rod is vertical when piping is hot and equalize loads on all hangers where possible.

3.3 SLEEVES

.1 Provide pipe sleeves at all points where pipes pass through masonry or concrete. Sleeves shall be at least 20 gauge core thickness galvanized sheet steel with lock seam joints.

.2 Provide cast iron pipe sleeve with integral annular fin or steel pipe sleeves with annular fin continuously welded at midpoint where the sleeve passes through foundation walls or extends above finished floor.

.3 Size sleeves to provide 6mm clearance all around, between sleeve and pipes or between sleeve and insulation. As a minimum where piping passes below footings, provide a clearance of at least 50mm between sleeve and pipe. Backfill around pipe sleeve up to underside of footing with concrete of the same strength as the footing. Do not embed pipe in concrete.

.4 Terminate sleeves flush with vertical surface of concrete and masonry or 100mm above floors.

.5 For pipes passing through roofs, provide cast iron sleeves with caulking recess and flashing clamp device. Anchor sleeves in roof construction; caulk between sleeve recess and pipe; fasten roof flashing to clamp device; make water-tight durable joint.

.6 Fill voids around pipes as follows:
- .1 Caulk between sleeve and pipe in foundation walls and below grade floors.
- .2 Where sleeves pass through walls or floors, caulk space between insulation and sleeve or between pipe and sleeve with waterproof fire retardant non-hardening mastic.

.7 Ensure no contact between copper tube or pipe and ferrous sleeve.

.8 On any exterior wall penetrations, provide special modular mechanical closures, "Link-Seal" as manufactured by Thunderline Corporation, to provide a watertight seal between pipe and wall sleeve.

.9 Fill future-use sleeves with easily removable filler.

.10 Coat exposed exterior surfaces of ferrous sleeves with heavy application of zinc rich paint.

.11 Temporarily plug all pipe openings during construction.

3.4 FIRESTOPPING

.1 All firestopping and smoke sealing (except for fire dampers) required for mechanical service penetrations of rated walls, floors and partitions shall be the responsibility of Division 7.

.2 Fire Compartments are indicated on Architectural Drawings

3.5 ESCUTCHEONS AND PLATES

.1 Provide escutcheons on exposed pipes passing through finished walls, partitions, floors and ceilings and secure to pipe or finished surface but do not secure to insulation. Inside diameter shall fit around the finished pipe or insulation. Outside diameter shall cover the opening or sleeve.

3.6 ACCESS DOORS

.1 Supply access doors for furred ceilings or spaces for servicing equipment and accessories or for inspection of safety, operating, or fire devices for installation by the appropriate trade.

3.7 DIELECTRIC COUPLINGS

.1 Provide wherever pipes of dissimilar metals are joined.

.2 Provide insulating unions for pipe sizes 50mm and under; flanges for pipe sizes over 50mm.

.3 Provide felt or rubber gaskets to prevent contact of dissimilar metals.

3.8 PAINTING REPAIRS AND RESTORATION

.1 Painting of equipment and material installed under Division 21, 22 and 23 is not part of the mechanical work except as noted.

.2 Do painting in accordance with Section 09 91 23 - Interior Painting.

.3 Prime and touch up marred finished paintwork to match original.

.4 Restore to new condition, finishes which have been damaged.

.5 Clean all uncoated metal surfaces such as piping, fittings, valves, and equipment and leave ready for painting.

.6 Prime uncoated metal surfaces in areas exposed to view that will be inaccessible to painter after installation.

.7 Assist painter to determine proper colour coding.

3.9 ANCHORAGE OF EQUIPMENT

.1 Anchor all machinery and equipment. Install lift rings for all major items of equipment, if required.

.2 Construct equipment supports of structural steel or steel pipe, securely braced. Use only welded construction. Bolt mounting plates to structure.

.3 Anchoring by explosive charge inserts is not acceptable unless approved by the Consultant

3.10 CANNING OR SLEEVING OF OPENINGS & HANGER INSERTS

.1 Provide all cans or forms required for openings in poured-in-place concrete to suit pipes or ducts etc. Locate each in place, well in advance of concrete pouring.

.2 Where cutting of the building framing or envelope is required to suit the work of this division, mark out the exact dimensions and position of such work and obtain the approval of the Consultant before carrying out cutting.

.3 Supply all sleeves and hanger inserts required for the work of this division.

3.11 PIPING EXPANSION LOOPS

.1 Provide expansion loops or joints where required.

.2 Securely anchor pipes to the building structure where necessary to provide proper expansion. Install pipe guides on each side of each expansion loop or joint.

3.12 SETTING AND ALIGNMENT

.1 Employ a journeyman millwright to align all V belt drives and shaft coupling drives prior to start up.

.2 Submit a certificate from the millwright certifying that the above work has been carried out.

3.13 EQUIPMENT LUBRICATION

.1 Lubricate all equipment which has provision for lubrication, with the exception of factory sealed bearings which shall be checked for alignment and smooth operation.

.2 Use the lubricant recommended by the manufacturer for the service for which the equipment is specified.

.3 Maintain and adequately lubricate equipment furnished and operated before completion of the Contract until the completed work is handed over to, and accepted by, the Owner. Provide a cardboard tag, wired in place on the equipment showing the date of motor start-up, the last date of lubrication, and the lubricant used.

3.14 CLEANING

.1 Clean interior and exterior of all systems including strainers. Vacuum interior of ductwork and air handling units.

3.15 FIELD QUALITY CONTROL

.1 Testing Piping Systems:
- .1 Conduct tests in accordance with Section 01 45 00 - Quality Control and submit report as described in PART 1 - SUBMITTALS.
- .2 Conduct tests and pay for all associated work including making good and re-testing when required.
- .3 Notify Consultant 48 hours in advance of date when tests will be conducted.
- .4 Make sure all work has been tested and approved prior to insulating or concealing.
- .5 Carry out tests in the presence of the Consultant and the Authority having jurisdiction.
- .6 Forward written test results to the Consultant.

.7
.8 Schedule of Tests:
.9

Service	Test Pressure	Testing Fluid	Duration
Water Systems	200 psi	Water	2 hours
Natural Gas	75 psi	Air	24 hours
Drainage Systems	5 psi	Water	6 hours

.10 Carry out tests on the natural gas system in accordance with applicable codes and regulations.
.11 Carry out tests on the water supply and drainage systems in accordance with governing bodies.
.12 Leave all work uncovered until completion of testing. However, should the construction schedule require that work be covered, carry out tests on portions of system prior to system covering. Give a minimum of 48 hours notice to Consultant prior to testing.

.2 Testing HVAC Systems:
.1 Refer to Section 23 05 93 Testing, Adjusting and Balancing for HVAC Systems.

.3 Manufacturer's Field Services:
.1 Obtain written report from manufacturer verifying compliance of Work, in handling, installing, applying, protecting and cleaning of product and submit Manufacturer's Field Reports as described in PART 1 - SUBMITTALS.
.2 Provide manufacturer's field services consisting of product use recommendations and periodic site visits for inspection of product installation in accordance with manufacturer's instructions.
.3 Schedule site visits, to review Work, as directed in PART 1 - QUALITY ASSURANCE.

.4 Field Testing:
.1 If the field tests indicate that equipment supplied to the project does not meet specifications, laboratory certification of the potentially deficient equipment may be requested by the Owner. In the event that equipment does not meet specifications, the Contractor shall be responsible for the costs of the above laboratory tests, and all subsequent testing and correction required.

3.16 DEMONSTRATION

.1 Consultant will use equipment and systems for test purposes prior to acceptance. Supply labour, material, and instruments required for testing.

.2 Supply tools, equipment and personnel to demonstrate and instruct operating and maintenance personnel in operating, controlling, adjusting, trouble-shooting and servicing of all systems and equipment during regular work hours, prior to acceptance.

.3 Use operation and maintenance manual, as-built drawings, and audio visual aids as part of instruction materials.

.4 Instruction duration time requirements as specified in appropriate sections.

3.17 PROTECTION

.1 Protect equipment and material during construction from the weather, moisture, dust, painting, plastering and physical damage. Cover all equipment with polyethylene plastic sheets during plaster or concrete work and clean and return to "as new" condition prior to Substantial Performance of the Work. Provide for repainting of marked or damaged surfaces as required.

.2 Mask or grease and cover machined surfaces. Securely cover equipment openings and open ends of piping, conduit, and ductwork as work progresses.

.3 Any equipment that has operating parts, bearings, or machined surfaces that show signs of rusting, pitting, or physical damage will be rejected.

3.18 CLEAN-UP

.1 At all times keep the premises free from accumulations of waste material caused by employees or work, and at the completion of the work, remove surplus materials and leave area "broom clean" or equivalent, unless otherwise specified.

.2

END OF SECTION

PART 1 GENERAL

1.1 SUMMARY

.1 Co-operate and co-ordinate with the requirements of other units of work specified in other sections.

.2 This section covers the insulation of the following:
- .1 Domestic hot, cold, and hot water recirculation piping
- .2 Glycol Heating System
- .3 Chilled Glycol System
- .4 Refrigerant Piping
- .5 Steam Piping
- .6 Storm drainage lines inside building (All Storm Drainage Lines shall be insulated as specified in this section for all piping Cast Iron, Copper and Plastic PVC Drainage piping. The insulation of PVC Piping shall be for sound attenuation.)
- .7 Horizontal and concealed vertical rainwater leaders inside the building (All Storm Drainage Lines shall be insulated as specified in this section for all piping Cast Iron, Copper and Plastic PVC Drainage piping. The insulation of PVC Piping shall be for sound attenuation.)

1.2 REFERENCES

.1 American Society of Heating, Refrigeration and Air Conditioning Engineers (ASHRAE)
- .1 ASHRAE Standard 90.1-2010, Energy Standard for Buildings Except Low-Rise Residential Buildings (IESNA co-sponsored; ANSI approved; Continuous Maintenance Standard).

.2 American Society for Testing and Materials International (ASTM)
- .1 ASTM B 209M, Standard Specification for Aluminum and Aluminum Alloy Sheet and Plate [Metric].
- .2 ASTM C 335, Standard Test Method for Steady State Heat Transfer Properties of Horizontal Pipe Insulation.
- .3 ASTM C 411, Standard Test Method for Hot-Surface Performance of High-Temperature Thermal Insulation.
- .4 ASTM C 449/C 449M, Standard Specification for Mineral Fiber-Hydraulic-Setting Thermal Insulating and Finishing Cement.
- .5 ASTM C 533, Calcium Silicate Block and Pipe Thermal Insulation.
- .6 ASTM C 547, Mineral Fiber Pipe Insulation.
- .7 ASTM C 795, Standard Specification for Thermal Insulation for Use in Contact with Austenitic Stainless Steel.
- .8 ASTM C 921, Standard Practice for Determining the Properties of Jacketing Materials for Thermal Insulation.

.3 Canadian General Standards Board (CGSB)
- .1 CGSB 51-GP-52Ma, Vapour Barrier, Jacket and Facing Material for Pipe, Duct and Equipment Thermal Insulation.
- .2 CAN/CGSB-51.53, Poly (Vinyl Chloride) Jacketting Sheet, for Insulated Pipes, Vessels and Round Ducts

.4 Department of Justice Canada (Jus)
- .1 Canadian Environmental Assessment Act (CEAA), 1995, c. 37.
- .2 Canadian Environmental Protection Act (CEPA), 1999, c. 33.
- .3 Transportation of Dangerous Goods Act (TDGA), 1992, c. 34.

.5 Health Canada/Workplace Hazardous Materials Information System (WHMIS)
- .1 Material Safety Data Sheets (MSDS).

.6 Manufacturer's Trade Associations
- .1 Thermal Insulation Association of Canada (TIAC): National Insulation Standards (Revised 2004).

.7 Underwriters' Laboratories of Canada (ULC)
- .1 CAN/ULC-S102, Surface Burning Characteristics of Building Materials and Assemblies.
- .2 CAN/ULC-S701, Thermal Insulation, Polystyrene, Boards and Pipe Covering.
- .3 CAN/ULC-S702, Thermal Insulation, Mineral Fibre, for Buildings
- .4 CAN/ULC-S702.2, Thermal Insulation, Mineral Fibre, for Buildings, Part 2: Application Guidelines.

1.3 DEFINITIONS

.1 For purposes of this section:
- .1 "CONCEALED" - insulated mechanical services in suspended ceilings and non-accessible chases and furred-in spaces.
- .2 "EXPOSED" - will mean "not concealed" as specified.

.2 TIAC ss:
- .1 CRF: Code Rectangular Finish.
- .2 CPF: Code Piping Finish.

1.4 SUBMITTALS

.1 Submittals: in accordance with Section 01 33 00 - Submittal Procedures.

.2 Product Data:
- .1 Submit manufacturer's printed product literature, specifications and datasheet in accordance with Section 01 33 00 - Submittal Procedures. Include product characteristics, performance criteria, and limitations.

.3 Shop Drawings:
- .1 Submit shop drawings in accordance with Section 01 33 00 - Submittal Procedures.
- .2 Submit product data for the following:
  - .1 Aluminum/Canvas Coverings
  - .2 Piping Insulation Types, noting application for each product
  - .3 Finishing cement
  - .4 Lagging adhesive
  - .5 Lavatory Drain Insulation
  - .6 Pipe Coverings
  - .7 Piping Insulation Inserts
  - .8 PVC/ABS Jackets

.4 Samples:
- .1 Submit samples in accordance with Section 01 33 00 - Submittal Procedures.
- .2 Submit for approval: complete assembly of each type of insulation system, insulation, coating, and adhesive proposed. Mount sample on 12 mm plywood board. Affix label beneath sample indicating service.

.5 Quality assurance submittals: submit following in accordance with Section 01 33 00 - Submittal Procedures.

.1 Certificates: submit certificates signed by manufacturer certifying that materials comply with specified performance characteristics and physical properties.
.2 Instructions: submit manufacturer's installation instructions.

1.5 QUALITY ASSURANCE

.1 Qualifications:

.2 Installer: specialist in performing work of this Section, and have at least 3 years successful experience in this size and type of project.

1.6 DELIVERY, STORAGE AND HANDLING

.1 Packing, shipping, handling and unloading:
.1 Deliver, store and handle in accordance with manufacturer's written instructions and Section 01 61 00 - Common Product Requirements.
.2 Deliver, store and handle materials in accordance with manufacturer's written instructions.
.3 Deliver materials to site in original factory packaging, labelled with manufacturer's name, address.

.2 Storage and Protection:
.1 Protect from weather, construction traffic.
.2 Protect against damage.
.3 Store at temperatures and conditions required by manufacturer.

PART 2 PRODUCTS

2.1 FIRE AND SMOKE RATING

.1 In accordance with CAN/ULC-S102.
.1 Maximum flame spread rating: 25.
.2 Maximum smoke developed rating: 50.

2.2 INSULATION

.1 Mineral fibre specified includes glass fibre, rock wool, slag wool.

.2 Thermal conductivity ("k" factor) not to exceed specified values at 24 degrees C mean temperature when tested in accordance with ASTM C 335.

.3 TIAC Code A-1: rigid moulded mineral fibre without factory applied vapour retarder jacket.
.1 Mineral fibre: to CAN/ULC-S702.
.2 Maximum "k" factor: to CAN/ULC-S702.

.4 TIAC Code A-3: rigid moulded mineral fibre with factory applied vapour retarder jacket.
.1 Mineral fibre: to CAN/ULC-S702.
.2 Jacket: to CGSB 51-GP-52Ma.
.3 Maximum "k" factor: to CAN/ULC-S702.

.5 TIAC Code C-2: mineral fibre blanket faced with factory applied vapour retarder jacket (as scheduled in PART 3 of this section).
.1 Mineral fibre: to CAN/ULC-S702.
.2 Jacket: to CGSB 51-GP-52Ma.
.3 Maximum "k" factor: to CAN/ULC-S702.

.6 TIAC Code A-6: flexible unicellular tubular elastomer.
- .1 Insulation: with vapour retarder jacket.
- .2 Jacket: to CGSB 51-GP-52Ma.
- .3 Maximum "k" factor: to CAN/ULC-S702.
- .4 Certified by manufacturer: free of potential stress corrosion cracking corrodants.

.7 TIAC Code A-2: rigid moulded calcium silicate in sections and blocks, and with special shapes to suit project requirements.
- .1 Insulation: to ASTM C 533.
- .2 Maximum "k" factor: to CAN/ULC-S702.
- .3 Design to permit periodic removal and re-installation.

2.3 INSULATION SECUREMENT

.1 Tape: self-adhesive, aluminum, reinforced, 50 mm wide minimum.

.2 Contact adhesive: quick setting.

.3 Canvas adhesive: washable.

.4 Bands: stainless steel, 19 mm wide, 0.5 mm thick.

2.4 CEMENT

.1 Thermal insulating and finishing cement:
- .1 Hydraulic setting or Air drying on mineral wool, to ASTM C 449/C 449M.

2.5 VAPOUR RETARDER LAP ADHESIVE

.1 Water based, fire retardant type, compatible with insulation.

2.6 INDOOR VAPOUR RETARDER FINISH

.1 Vinyl emulsion type acrylic, compatible with insulation.

2.7 OUTDOOR VAPOUR RETARDER FINISH

.1 Vinyl emulsion type acrylic, compatible with insulation.

.2 Reinforcing fabric: fibrous glass, untreated 305 g/m².

2.8 JACKETS

.1 Polyvinyl Chloride (PVC):
- .1 Use PVC jackets only where surface temperature is between -20 degrees C and 65 degrees C only.
- .2 One-piece moulded type to CAN/CGSB-51.53 with pre-formed shapes as required.
- .3 Colours: White
- .4 Minimum service temperatures: -20 degrees C.
- .5 Maximum service temperature: 65 degrees C.
- .6 Moisture vapour transmission: 0.02 perm.
- .7 Fastenings:
  - .1 Use solvent weld adhesive compatible with insulation to seal laps and joints.
  - .2 Tacks.
  - .3 Pressure sensitive vinyl tape of matching colour.

.8 Special requirements:
.1 Outdoor: UV rated material at least 0.5mm thick.

2.9 WEATHERPROOF CAULKING FOR JACKETS INSTALLED OUTDOORS

.1 Caulking to: Section 07 92 00 - Joint Sealing.

2.10 LAVATORY DRAIN INSULATION

.1 Uce McGuire ProWrap seamless lavatory insulation kits, manufactured of anti-microbial closed cell moulded vinyl material.

.2 Insulate all lavatory drains shown on Drawings.

.3 Standard of Acceptance: Truebro

PART 3 EXECUTION

3.1 MANUFACTURER'S INSTRUCTIONS

.1 Compliance: comply with manufacturer's written recommendations or specifications, including product technical bulletins, handling, storage and installation instructions, and datasheet.

3.2 PRE-INSTALLATION REQUIREMENT

.1 Pressure testing of piping systems and adjacent equipment to be complete, witnessed and certified.

.2 Surfaces clean, dry, free from foreign material.

3.3 INSTALLATION

.1 Install in accordance with TIAC National Standards.

.2 Apply materials in accordance with manufacturers instructions and this specification.

.3 Use two layers with staggered joints when required nominal wall thickness exceeds 75 mm.

.4 Maintain uninterrupted continuity and integrity of vapour retarder jacket and finishes.
.1 Install hangers, supports outside vapour retarder jacket.

.5 Supports, Hangers:
.1 Apply high compressive strength insulation, suitable for service, at oversized saddles and shoes where insulation saddles have not been provided.

.6 Fittings
.1 Insulate fittings with sections of the pipe covering mitred to fit tightly, or strips of flexible insulation, then apply reinforcing membrane embedded in barrier coating. Alternatively insulate fittings with tightly placed flexible insulation and apply PVC fitting covers.

.7 Valves
.1 Insulate valve bodies, bonnets and strainers with insulating cement; or with fitted pipe coverings; or with mitred blocks all to thickness of adjacent pipe covering, then apply reinforcing membrane embedded in barrier coating. Alternatively, insulate with tightly placed flexible insulation covered with reinforcing membrane, stapled in place and covered

with a barrier coating. Leave drains, blow-off plugs and caps uncovered.

.8 Flanges
.1 Insulate cold flanges with oversized pipe covering or mitred blocks to the thickness of the adjacent pipe covering, then apply reinforcing membrane embedded in barrier coating.

.9 Insulation Termination Points
.1 Terminate insulation 3” from fittings to provide working clearance and bevel insulation at 45° angle.

3.4 REMOVABLE, PRE-FABRICATED, INSULATION AND ENCLOSURES

.1 Application: at expansion joints, valves, primary flow measuring elements and flanges and unions at equipment.

.2 Design: to permit movement of expansion joint and to permit periodic removal and replacement without damage to adjacent insulation.

.3 Insulation:
.1 Insulation, fastenings and finishes: same as system.
.2 Jacket: aluminum, PVC or high temperature fabric.

3.5 INSTALLATION OF ELASTOMERIC INSULATION

.1 Insulation to remain dry. Overlaps to manufacturers instructions. Ensure tight joints.

.2 Provide vapour retarder as recommended by manufacturer.

3.6 PIPING INSULATION SCHEDULES

.1 Includes valves, valve bonnets, strainers, flanges and fittings unless otherwise specified.

.2 In piping 1 in. or less, insulation is not required for strainers, control valves and balancing valves.

.3 TIAC Code: A-1.
.1 Securements: bands, Tape at 300 mm on centre.
.2 Seals: lap seal adhesive, lagging adhesive.
.3 Installation: TIAC Code 1501-H.

.4 TIAC Code: A-3.
.1 Securements: bands, Tape at 300 mm on centre.
.2 Seals: VR lap seal adhesive, VR lagging adhesive.
.3 Installation: TIAC Code: 1501-C.

.5 TIAC Code: A-6.
.1 Insulation securements: Tape.
.2 Seals: lap seal adhesive, lagging adhesive.

.6 TIAC Code: C-2 with vapour retarder jacket.
.1 Securements: bands, Tape at 300 mm on centre.
.2 Seals: lap seal adhesive, lagging adhesive.
.3 Installation: TIAC Code: 1501-C.

.7 Thickness of insulation as listed in following table.
.1 Thicknesses listed below are based upon adherence to ASHRAE 90.1.

.2 Run-outs to individual units and equipment not exceeding 4000 mm long.
.3 Do not insulate exposed runouts to plumbing fixtures, chrome plated piping, valves, fittings.

Service	Operating Temperature (°F)	TIAC Code	Pipe Diameter	Insulation Thickness
Domestic Cold Water, and Above Ground Storm Water & Vertical Rainwater leaders (Anti-Sweat)		A-3 or C-2	1 1/4” and under	13 mm (½”)
			1 ½” and over	25 mm (1”)
Domestic Hot Water and Hot Water Recirculation	<140 °F	A-3	1 1/4” and under	25 mm (1”)
			1 ½” and over	38 mm (1 ½”)
Refrigeration Lines	<40 °F to 60 °F	A-6	<1”	13 mm (½”)
			1” and over	25 mm (1”)
Glycol Hot Water Heating (Supply & Return)	150°F to 170 °F	A-3	1 1/4” and under	38 mm (1 ½”)
			1 ½” and over	50 mm (2”)
Glycol Chilled Water Piping (Supply & Return)	45 °F to 60 °F	A-3	1 1/4” and under	13 mm (½”)
			1 ½” and over	25 mm (1”)
Steam Piping	251 °F to 300 °F	A-3	<1”	75 mm (3”)
			1” to < 1-1/2”	100 mm (4”)
			1-1/2” to < 4”	112 mm (4-1/2”)
			4” to < 8”	125 mm (5”)

Finishes:
Exposed indoors: PVC jacket.
Exposed in mechanical rooms: PVC jacket.
Concealed, indoors: insulation on concealed piping will be left as factory finished with no further finish required.
Outdoors: water-proof aluminum or ABS jacket.
Finish attachments: Seals: closed.
Installation: to appropriate TIAC code CRF/1 through CPF/5.

3.7 FIELD QUALITY CONTROL

.1 Use only licensed journeymen for the work.

.2 Apply insulation materials, accessories and finishes in accordance with manufacturer's recommendations.

.3 Carry out insulation work only after the following conditions have been met:
.1 Required tests have been completed;
.2 Surfaces to be covered are clean and dry;
.3 Ferrous surfaces have been painted.

.4 Use only clean and dry insulation for the work.

.5 Install insulation with smooth and even surfaces, with round shapes laid to true circular and concentric shape, shape to blend with fitting insulation and adjacent covering; with full length section and tight to insulated object.

.6 Supports:
- .1 Do not penetrate vapour seals with pipe hangers and supports.
- .2 Vertical pipe over 80mm: use insulation supports welded or bolted to pipe directly above lowest pipe fitting, thereafter locate on 4600mm centres and at each valve or pair of line flanges.
- .3 Space insulation and support for movement of piping as required.

.7 Penetrations:
- .1 For covered or uncovered pipes, pack mineral fibre insulation solidly around pipes where they pass through sleeves, for depth of penetration. Those with vapour barrier jacket shall have continuous covering. Make sure that pipe sleeves accommodate full thickness of insulation and allow pipe expansion. Provide mastic topping to seal annular space.

.8 Butt Joints:
- .1 Adhere and seal laps of vapour barrier cover or use 100 mm wide vapour barrier strip using vapour seal adhesive.
- .2 Stagger both longitudinal and horizontal joints on duct insulation in multi-layered construction.
- .3 At each end of unions and flanges on low pressure systems, at pipe hangers, and at other points where required, terminate insulation with insulation cement trowelled on bevel.

.9 Allow for radial expansion of pipe and permit pipe to move longitudinally inside insulation and to expand and contract without opening up joints between sections.

.10 Gouge out insulation for proper fit where there is interference between weld bead and insulation. Bevel insulation away from studs and nuts to permit their removal without damage to insulation. Closely and neatly trim insulation around extending parts of pipe saddles, supports, hangers, and clamp guides and seal with insulating cement.

.11 For all locations where pipe hangers are on the outside of the insulation, provide insulation saddles or blocks of high density insulation to prevent crushing or compression of insulation due to weight of pipe.

3.8 CLEANING

.1 Proceed in accordance with Section 01 74 11 - Cleaning.

.2 Upon completion and verification of performance of installation, remove surplus materials, excess materials, garbage, tools and equipment.

END OF SECTION

PART 1 GENERAL

1.1 SECTION INCLUDES

.1 Materials and installation for domestic water service used in the following:
- .1 Hard drawn copper domestic hot and cold water services inside building.
- .2 Soft copper tubing inside building.

1.2 RELATED SECTIONS

.1 Section 01 33 00 - Submittal Procedures.

.2 Section 01 78 00 - Closeout Submittals.

.3 Section 21 05 01 - Common Work Results for Mechanical.

.4 Section 23 05 01 - Installation of Pipework.

.5 Section 23 05 23 - Valves.

.6 Section 23 05 93 - Testing, Adjusting and Balancing for HVAC.

1.3 REFERENCES

.1 American National Standards Institute (ANSI)/American Society of Mechanical Engineers International (ASME).
- .1 ANSI/ASME B16.15, Cast Bronze Threaded Fittings, Classes 125 and 250.
- .2 ANSI/ASME B16.18, Cast Copper Alloy Solder Joint Pressure Fittings.
- .3 ANSI/ASME B16.22, Wrought Copper and Copper Alloy Solder Joint Pressure Fittings.
- .4 ANSI/ASME B16.24, Cast Copper Alloy Pipe Flanges and Flanged Fittings, Class 150, 300, 400, 600, 900, 1500 and 2500.

.2 American Society for Testing and Materials International, (ASTM).
- .1 ASTM A 307, Standard Specification for Carbon Steel Bolts and Studs, 60,000 PSI Tensile Strength.
- .2 ASTM B 88M, Standard Specification for Seamless Copper Water Tube (Metric).
- .3 ASTM F 492, Standard Specification for Propylene and Polypropylene (PP) Plastic-Lined Ferrous Metal Pipe and Fittings.

.3 American Water Works Association (AWWA).
- .1 AWWA C111, Rubber-Gasket Joints for Ductile-Iron Pressure Pipe and Fittings.

.4 Canadian Standards Association (CSA International).
- .1 CSA B242, Groove and Shoulder Type Mechanical Pipe Couplings.

.5 Ontario Building Code 2012

1.4 SUBMITTALS

.1 Submittals in accordance with Section 01 33 00 - Submittal Procedures.

.2 Submit product data for following:
- .1 Valves.

.2 Gauges.
.3 Plumbing Fixtures.

.3 Provide maintenance data for incorporation into manual specified in Section 01 78 00 - Closeout Submittals.

1.5 STORAGE AND HANDLING

.1 Comply with Section 01 61 00, Product Requirements.

.2 Copper tubing shall be shipped to the job site on truck or in such a manner to protect the tubing. The tubing and fittings shall not be roughly handled during shipment. Tubing and fittings shall be unloaded with reasonable care.

.3 Protect the stored product from moisture and dirt. Elevate above grade.

.4 When stored inside, do not exceed the structural capacity of the floor.

.5 Protect fittings and piping specialties from moisture and dirt.

PART 2 PRODUCTS

2.1 PIPING

.1 Domestic hot, cold and recirculation systems, within building.
.1 Above ground: copper tube, hard drawn, type L: to ASTM B 88M.
.2 Buried or embedded: copper tube, soft annealed, type K: to ASTM B 88M, in long lengths and with no buried joints.

2.2 FITTINGS

.1 Bronze pipe flanges and flanged fittings, Class 150: to ANSI/ASME B16.24.

.2 Cast bronze threaded fittings, Class 125 and 250: to ANSI/ASME B16.15.

.3 Cast copper, solder type: to ANSI/ASME B16.18.

.4 Wrought copper and copper alloy, solder type: to ANSI/ASME B16.22.

.5 NPS 2 and larger: roll grooved to CSA B242.

.6 Press Fitting: Copper and copper alloy press fittings shall conform to material requirements of ASME B16.18 or ASME B16.22 and performance criteria of IAPMO PS 117. Sealing elements for press fittings shall be EPDM. Sealing elements shall be factory installed or an alternative supplied by fitting manufacturer. Press ends shall have SC (Smart Connect®) feature (or equal) design (leakage path). In ProPress ½” to 4” dimensions the Smart Connect Feature (or equal) assures leakage of liquids and/or gases from inside the system past the sealing element of an unpressed connection. The function of this feature is to provide the installer quick and easy identification of connections which have not been pressed prior to putting the system into operation.

2.3 JOINTS

.1 Rubber gaskets, latex-free 1.6 mm thick: to AWWA C111.

.2 Bolts, nuts, hex head and washers: to ASTM A 307, heavy series.

.3 Solder: 95/5 tin copper alloy.

.4 Teflon tape: for threaded joints.

.5 Grooved couplings: designed with angle bolt pads to provide rigid joint, complete with EPDM flush seal gasket.

.6 Dielectric connections between dissimilar metals: dielectric fitting to ASTM F 492, complete with thermoplastic liner.

.7 Press Fitting: Copper and copper alloy press fittings shall conform to material requirements of ASME B16.18 or ASME B16.22 and performance criteria of IAPMO PS 117.

2.4 GATE VALVES

.1 50mm and under, soldered:
- .1 Rising stem: to MSS-SP-80, Class 125, 860 kPa, bronze body, screw-in bonnet, solid wedge disc as specified Section 23 05 23 - Valves.

.2 50mm and under, screwed:
- .1 Rising stem: to MSS-SP-80, Class 125, 860 kPa, bronze body, screw-in bonnet, solid wedge disc as specified Section 23 05 23 - Valves.

2.5 GLOBE VALVES

.1 50mm and under, soldered:
- .1 To MSS-SP-80, Class 125, 860 kPa, bronze body, renewable composition disc, screwed over bonnet as specified Section 23 05 23 - Valves.
- .2 Lockshield handles: as required.

.2 50mm and under, screwed:
- .1 To MSS-SP-80, Class 150, 1 MPa, bronze body, screwed over bonnet, renewable composition disc as specified Section 23 05 23 - Valves.
- .2 Lockshield handles: as required.

2.6 BALL VALVES

.1 50mm and under, screwed:
- .1 Class 150.
- .2 Bronze body, chrome plated brass or stainless steel ball, PTFE adjustable packing, brass gland and PTFE seat, steel lever handle as specified Section 23 05 23 - Valves.
- .3 Solid bronze Ball, NO hollow ball acceptable

.2 50mm and under, soldered:
- .1 To ANSI/ASME B16.18, Class 150.
- .2 Bronze body, chrome plated brass or stainless steel ball, PTFE adjustable packing, brass gland and PTFE seat, steel lever handle, with NPT to copper adaptors as specified Section 23 05 23 - Valves.
- .3 Solid bronze Ball, NO hollow ball acceptable

PART 3 EXECUTION

3.1 INSTALLATION

.1 Install in accordance with Ontario Building Code and local authority having jurisdiction.

.2 Install pipe work in accordance with Section 23 05 01 - Installation of Pipework, supplemented as specified herein.

.3 Assemble piping using fittings manufactured to ANSI standards.

.4 Connect to fixtures and equipment in accordance with manufacturer's written instructions unless otherwise indicated.

.5 Buried tubing:
- .1 Lay in well compacted washed sand in accordance with AWWA Class B bedding.
- .2 Bend tubing without crimping or constriction. Minimize use of fittings.

3.2 VALVES

.1 Isolate equipment, fixtures and branches with gate or ball valves.

.2 Balance recirculation system using lockshield globe valves. Mark settings and record on as-built drawings on completion.

3.3 PRESSURE TESTS

.1 Conform to requirements of Section 21 05 01 - Common Work Results for Mechanical.

.2 Test pressure: greater of 1.5 times maximum system operating pressure or 860 kPa.

3.4 FLUSHING AND CLEANING

.1 During construction, plug or cap all piping to prevent entrance of foreign material.

.2 Flush water piping systems until the issuing water is free of sediment.

.3 Clean and reinstall all strainer baskets.

.4 On completion of installation and testing of the potable water systems pre-flush, chlorinate, and thoroughly flush again in accordance with American Water Works Association (A.W.W.A.) C601 and C651.

.5 Retain an independent inspection firm to supervise and inspect the chlorination and flushing procedures and perform chemical and biological tests as required.

.6 Submit to the Consultant a certificate from the testing firm stating that the chlorination and flushing has been successfully carried out.

.7 Acceptable Firms: Pace Chemicals, Dearborn Chemical, IPAC Chemicals.

.8 Flushing without chlorination is acceptable for process water systems.

3.5 PRE-START-UP INSPECTIONS

.1 Systems to be complete, prior to flushing, testing and start-up.

.2 Verify that system can be completely drained.

.3 Ensure that air chambers, expansion compensators are installed properly.

3.6 DISINFECTION

.1 Flush out, disinfect and rinse system to requirements of authority having jurisdiction.

.2 Upon completion, provide laboratory test reports on water quality for Consultant approval.

3.7 START-UP

.1 Timing: Start up after:
- .1 Pressure tests have been completed.
- .2 Disinfection procedures have been completed.
- .3 Certificate of static completion has been issued.
- .4 Water treatment systems operational.

.2 Provide continuous supervision during start-up.

3.8 PERFORMANCE VERIFICATION

.1 Timing:
- .1 After pressure and leakage tests and disinfection completed, and certificate of completion has been issued by authority having jurisdiction.

.2 Procedures:
- .1 Verify that flow rate and pressure meet Design Criteria.
- .2 Test. Adjust and balance domestic hot and cold water systems in accordance with Section 23 05 93 - Testing, Adjusting and Balancing for HVAC.
- .3 Adjust pressure regulating valves while withdrawal is maximum and inlet pressure is minimum.
- .4 Sterilize domestic hot and cold water systems for Legionella control.
- .5 Verify performance of temperature controls.
- .6 Confirm water quality consistent with supply standards, verifying that no residuals remain as a result of flushing and/or cleaning.

3.9 OPERATION REQUIREMENTS

.1 Co-ordinate operation and maintenance requirements including, cleaning and maintenance of specified materials and products with Section 23 05 05 - Installation of Pipework.

END OF SECTION

PART 1 GENERAL

1.1 SUMMARY

.1 All pipe and fittings provided by this Section shall be approved by all Authorities and meet all regulations. The products shall bear all necessary labels and markings including the CSA logo for CSA certifications and a ULC label to confirm Flame Spread Rating and or Smoke Developed Classification values. Do not install pipe or fittings that fail to meet the Plumbing and Building Code requirements. Secure these approvals prior to installation

.2 Drainage Piping suitable materials for service:

SERVICE	MATERIAL			Specification Section
	TYPE OF PIPE AND FITTING	ABOVE GRADE	BELOW GRADE	
Sanitary Drains and Vents	ABS	X	O	22 13 18
	PVC	O	O	22 13 18
Storm Drain	PVC	O	O	22 13 18
	ABS	X	O	22 13 18

1.2 RELATED REQUIREMENTS

.1 Section 01 33 00 – Submittal Procedures.

.2 Section 01 45 00 – Quality Control

.3 Section 01 74 19 –Waste Management and Disposal

.4 Section 01 78 00 – Closeout Submittals.

.5 Section 21 05 01 – Common Work Results for Mechanical

1.3 REFERENCES

.1 ASTM International Inc.
- .1 ASTM D 2235, Standard Specification for Solvent Cement for Acrylonitrile-Butadiene-Styrene (ABS) Plastic Pipe and Fittings.
- .2 ASTM D 2564, Standard Specification for Solvent Cements for Poly(Vinyl-Chloride) (PVC) Plastic Piping Systems.

.2 Canadian Standards Association (CSA International)
- .1 CAN/CSA-Series B1800, Thermoplastic Nonpressure Pipe Compendium - B1800 Series.

1.4 ACTION AND INFORMATIONAL SUBMITTALS

.1 Provide submittals in accordance with Section 01 33 00 - Submittal Procedures.

.2 Product Data:

.1 Provide manufacturer's printed product literature and datasheets for adhesives, and include product characteristics, performance criteria, physical size, finish and limitations.

1.5 DELIVERY, STORAGE AND HANDLING

.1 Deliver, store and handle in accordance with Section 01 61 00 - Common Product Requirements.

.2 Deliver materials to site in original factory packaging, labelled with manufacturer's name, address.

PART 2 PRODUCTS

2.1 Material/Component Standards

.1 ABS Pipe and Fittings: to CAN/CSA-B18.1.1-M.

.2 PVC Pipe and Fittings: to CAN/CSA-B181.2-M.

.3 Polyethylene Pipe and Fittings: to CAN/CSA-B137.1-M

.4 Plastic Underground Drainage Pipe and Fittings: to CAN/CSA-B182.1.

2.2 SANITARY, STORM AND VENT PIPE AND FITTINGS (UNDERGROUND ONLY)

.1 For sizes 40mm and larger, IPEX ‘System 15’ (or approved equal) PVC DWV Pipe and Fittings certified to CSA B181.2 shall be installed. The joining method for ‘System 15’ (or approved equal) pipe and fittings shall include the use of either (a) Purple primer for PVC (Xirtec 7) and CSA certified PVC solvent cement (IPEX 'System 15' Two-Step), or (b) for sizes no greater than 6 inches, IPEX ‘System 15’ One-Step PVC Cement, both as supplied by IPEX Inc. (Contact IPEX Inc. prior to installation for proper cementing procedures). Pipe and fittings shall have a third-party listing from ULC or ITS to exhibit a Flame Spread Rating of not greater than 25 when tested according to ULC S102.2.

.2 ABS to CSA B181.1

2.3 SANITARY, STORM AND VENT PIPE AND FITTINGS (ABOVE GROUND (PLENUM RATED))

.1 For sizes 40mm and larger, IPEX ‘System XFR’ (or approved equal) PVC DWV Pipe and Fittings certified to CSA B181.2 shall be installed. The joining method for ‘System XFR’ shall be as indicated above. Pipe and fittings shall have a third-party listing from ULC or ITS to exhibit a Flame Spread Rating of not greater than 25 and a Smoke Developed Classification of not greater than 50 when tested according to ULC S102.2.

2.4 JOINTS

.1 Solvent weld for PVC: to ASTM D 2564.

.2 Solvent weld for ABS: to ASTM D 2235.

.3 For sizes 40mm and larger, IPEX ‘System XFR’ PVC DWV Pipe and Fittings certified to CSA B181.2 shall be installed. The joining method for ‘System XFR’ shall be as indicated above. Pipe and fittings shall have a third-party listing from ULC or ITS to exhibit a Flame Spread Rating of not greater than 25 and a Smoke Developed Classification of not greater than 50 when tested according to ULC S102.2.

PART 3 EXECUTION

3.1 APPLICATION

.1 Comply with manufacturer's written recommendations, including product technical bulletins, handling, storage and installation instructions, and datasheets.

3.2 INSTALLATION

.1 In accordance with Section 23 05 05 - Installation of Pipework.

.2 Install in accordance with Ontario Building Code, Ontario Provincial Plumbing Code and local authority having jurisdiction.

3.3 TESTING

.1 Pressure test buried systems before backfilling.

.2 Hydraulically test to verify grades and freedom from obstructions.

3.4 PERFORMANCE VERIFICATION

.1 Cleanouts:
- .1 Ensure accessible and that access doors are correctly located.
- .2 Open, cover with linseed oil and re-seal.
- .3 Verify cleanout rods can probe as far as the next cleanout, at least.

.2 Test to ensure traps are fully and permanently primed.

.3 Storm water drainage:
- .1 Verify domes are secure.
- .2 Ensure weirs are correctly sized and installed correctly.
- .3 Verify provisions for movement of roof system.

.4 Ensure fixtures are properly anchored, connected to system and effectively vented.

.5 Affix applicable label (storm, sanitary, vent, pump discharge) complete with directional arrows every floor or 4.5 m (whichever is less).

3.5 CLEANING

.1 Clean in accordance with Section 01 74 11 - Cleaning.

END OF SECTION

PART 1 GENERAL

1.1 SUMMARY

.1 Section Includes:
- .1 The supply and installation of Plumbing Fixtures and Trim.
- .2 Refer to Plumbing Fixture Schedule on drawing m0.0.

1.2 RELATED SECTIONS

.1 Section 01 33 00 - Submittal Procedures

.2 Section 01 74 19 - Waste Management And Disposal.

.3 Section 01 78 00 - Closeout Submittals.

.4 Section 22 11 18 – Domestic Water Piping Copper

.5 Section 22 13 17 – Drainage Waste and Vent Piping – Cast Iron and Copper

.6 Section 22 13 17 – Drainage Waste and Vent Piping Plastic

1.3 REFERENCES

.1 Canadian Standards Association (CSA International).
- .1 CAN/CSA-B45 Series, Plumbing Fixtures.
- .2 CAN/CSA-B125, Plumbing Fittings.
- .3 CAN/CSA-B651, Barrier-Free Design.

1.4 SUBMITTALS

.1 Submittals in accordance with Section 01 33 00 - Submittal Procedures.

.2 Closeout Submittals:
- .1 Submit maintenance data in accordance with Section 01 78 00 - Closeout Submittals.
- .2 Include:
  - .1 Description of fixtures and trim, giving manufacturer's name, type, model, year, capacity.
  - .2 Details of operation, servicing, maintenance.
  - .3 List of recommended spare parts.

1.5 DELIVERY STORAGE AND DISPOSAL

.1 Packing, shipping, handling and unloading:
- .1 Deliver, store and handle in accordance with manufacturer's written instructions and Section 01 61 00 - Common Product Requirements.

PART 2 PRODUCTS

2.1 MATERIAL

.1 Provision of plumbing and drainage systems, providing new waste, drainage, vent, hot and cold water piping systems complete with new fixtures and equipment as indicated on the plumbing drawings and as per the plumbing fixture schedule.

.2 In case of discrepancy between architectural and mechanical drawings as to number and location of fixtures, the architectural drawings shall govern.

.3 Plumbing fixtures and fittings shall be product of one manufacturer and of same colour in any one washroom or location and to be as per drawing fixture schedule.

.4 Materials: Vitreous china to CSA B45.1. Plumbing fittings to CSA B125. Exposed plumbing brass and metal work shall be heavy triple chromium plated.

2.2 MANUFACTURED UNITS

.1 Fixtures: manufacture in accordance with CAN/CSA-B45 series.

.2 Trim, fittings: manufacture in accordance with CAN/CSA-B125.

.3 Exposed plumbing brass to be heavy triple chromium plated.

.4 Number, locations: architectural drawings to govern.

.5 Fixtures in any one location to be product of one manufacturer and of same type.

.6 Trim in any one location to be product of one manufacturer and of same type.

.7 Fixture piping:
- .1 Hot and cold water supplies to each fixture:
  - .1 Chrome plated rigid supply pipes each with handwheel stop, reducers, escutcheon.
- .2 Waste:
  - .1 Brass P trap with clean out on each fixture not having integral trap.
  - .2 Chrome plated in all exposed places.

.8 Chair carriers:
- .1 Factory manufactured floor-mounted carrier systems for all wall-mounted fixtures.

PART 3 EXECUTION

3.1 INSTALLATION

.1 Mounting heights:
- .1 Standard: as per architectural drawings and elevations and the Ontario Building Code and the local requirements of all the authorities having jurisdiction.
- .2 Wall-hung fixtures: as indicated on the architectural drawings and elevations and the Ontario Building Code, and the local requirements of all the authorities having jurisdiction, measured from finished floor.
- .3 Physically handicapped: to comply with most stringent of the Architectural Drawings and Elevations, Ontario Building Code, and the local requirements of all the authorities having jurisdiction or CAN/CSA B651.

.4 Contractor to provide a mock-up of fixtures as required by the consultant to ensure that there are no interferences with fixtures, sensor operated flush valves, grab bars and bathroom accessories. Contractor to provide at a minimum the fixtures, grab bars, sensors and bathroom accessories for a typical Barrier Free Water closet. Other mock-ups maybe required at the consultants request.

3.2 ADJUSTING

.1 Conform to water conservation requirements specified this section.

.2 Adjustments:
- .1 Adjust water flow rate to design flow rates.
- .2 Adjust pressure to fixtures to ensure no splashing at maximum pressures.

.3 Checks:
- .1 Aerators: operation, cleanliness.
- .2 Vacuum breakers, backflow preventers: operation under all conditions.
- .3 Wash fountains: operation of flow-actuating devices.

.4 Thermostatic controls:
- .1 Verify temperature settings, operation of control, limit and safety controls.

END OF SECTION

PART 1 GENERAL

.1 SUMMARY

.2 Section Includes:
- .1 Materials and installation for plumbing specialties and accessories.

1.2 RELATED SECTIONS

.1 Section 01 33 00 - Submittal Procedures.

.2 Section 01 74 19 - Waste Management and Disposal.

.3 Section 01 78 00 - Closeout Submittals.

.4 Section 22 11 16 – Domestic Water Piping - Copper

.5 Section 22 13 18 – Drainage Waste and Vent Piping Plastic

1.3 REFERENCES

.1 American Society for Testing and Materials International (ASTM).
- .1 ASTM A 126, Specification for Gray Iron Castings for Valves, Flanges and Pipe Fittings.
- .2 ASTM B 62, Specification for Composition Bronze or Ounce Metal Castings.

.2 American Water Works Association (AWWA).
- .1 AWWA C700, Cold Water Meters-Displacement Type, Bronze Main Case.
- .2 AWWA C701, Cold Water Meters-Turbine Type for Customer Service.
- .3 AWWA C702-1, Cold Water Meters-Compound Type.

.3 Canadian Standards Association (CSA International).
- .1 CSA-B64 Series, Backflow Preventers and Vacuum Breakers.
- .2 CSA-B79, Floor, Area and Shower Drains, and Cleanouts for Residential Construction.
- .3 CSA-B356, Water Pressure Reducing Valves for Domestic Water Supply Systems.

1.4 SUBMITTALS

.1 Submittals in accordance with Section 01 33 00 - Submittal Procedures.

.2 Product Data:
- .1 Submit manufacturer's printed product literature, specifications and datasheet for fixtures and equipment.
- .2 Indicate dimensions, construction details and materials for specified items.

.3 Shop Drawings:
- .1 Submit shop drawings to indicate materials, finishes, method of anchorage, number of anchors, dimensions, construction and assembly details and accessories for all fixture as required for system installation and indicated in the plumbing fixture schedule

.4 Certificates: submit certificates signed by manufacturer certifying that materials comply with specified performance characteristics and physical properties.

.5 Instructions: submit manufacturer's installation instructions.

.6 Manufacturers' Field Reports: manufacturers' field reports specified.

.7 Closeout submittals: submit maintenance and engineering data for incorporation into manual specified in Section 01 78 00 - Closeout Submittals, include:
- .1 Description of plumbing specialties and accessories, giving manufacturers name, type, model, year and capacity.
- .2 Details of operation, servicing and maintenance.
- .3 Recommended spare parts list.

1.5 DELIVERY, STORAGE AND HANDLING

.1 Packing, shipping, handling and unloading:
- .1 Deliver, store and handle in accordance with manufacturer's written instructions and Section 01 61 00 - Common Product Requirements.

PART 2 PRODUCTS

2.1 MATERIALS

.1 Installation shall be in strict accordance with the current editions of the Ontario Plumbing Code, Ontario Building Code, and local requirements of all authorities having jurisdiction.

.2 All material to be CSA approved for intended application.

2.2 FLOOR DRAINS

.1 Refer to the plumbing fixture schedule.

.2 All floor drains to correspond to the flooring type. Refer to architectural drawings for details. In case of discrepancy between architectural and mechanical drawings as to the flooring type and associated drain type, the architectural drawings shall govern.

.3 In case of discrepancy between architectural and mechanical drawings as to number and location of Floor Drains, the Mechanical drawings shall govern.

2.3 ROOF DRAINS

.1 Refer to the plumbing fixture schedule. Roof drains are provided by the roofing trade and connected by this trade.

2.4 CLEANOUTS

.1 Refer to the plumbing fixture schedule.

.2 Quantities shown on drawings are for coordination of specific cleanouts. Provide all clean outs, additional to those shown on plans as required to conform to OBC.

2.5 NON-FREEZE WALL HYDRANTS

.1 Refer to the plumbing fixture schedule.

2.6 VACUUM BREAKERS

.1 Breakers: to CSA-B64 Series, vacuum breaker atmospheric.

2.7 TRAP SEAL PRIMERS

.1 Trap Seal Primers: Traps in floor drains require priming according to plumbing code. Provide priming device piped to nearest lavatory, urinal or water closet so that device will introduce regulated amount of water into trap whenever fixture is used. All floor drains require a TSP device.

.2 Refer to plumbing Fixture Schedule.

PART 3 EXECUTION

3.1 MANUFACTURER'S INSTRUCTIONS

.1 Compliance: comply with manufacturer's written recommendations or specifications, including product technical bulletins, handling, storage and installation instructions, and data sheet.

3.2 INSTALLATION

.1 Installation shall be in strict accordance with the current editions of the Ontario Plumbing Code, Ontario Building Code, and local requirements of all authorities having jurisdiction.

.2 Install in accordance with manufacturer's instructions and as specified.

3.3 CLEANOUTS

.1 Install cleanouts at base of soil and waste stacks, and rainwater leaders, at locations required code, and as indicated.

.2 Bring cleanouts to wall or finished floor unless serviceable from below floor.

.3 Building drain cleanout and stack base cleanouts: line size to maximum NPS4.

3.4 NON-FREEZE WALL HYDRANTS

.1 Install 600 mm above finished grade unless otherwise indicated.

3.5 TRAP SEAL PRIMERS

.1 Install for <u>all new floor drains</u> and elsewhere, as indicated.

.2 Install on cold water supply to nearest frequently used plumbing fixture, in concealed space.

.3 Install soft copper tubing to floor drain.

3.6 START-UP

.1 General:
- .1 In accordance with Section 01 91 13 - General Commissioning (Cx) Requirements: General Requirements, supplemented as specified herein.

.2 Timing: start-up only after:
- .1 Pressure tests have been completed.
- .2 Disinfection procedures have been completed.
- .3 Certificate of static completion has been issued.
- .4 Water treatment systems operational.

.3 Provide continuous supervision during start-up.

3.7 TESTING AND ADJUSTING

.1 Timing:
- .1 After start-up deficiencies rectified.
- .2 After certificate of completion has been issued by authority having jurisdiction.

.2 Application tolerances:
- .1 Pressure at fixtures: +/- 70kPa.
- .2 Flow rate at fixtures: +/- 20%.

.3 Adjustments:
- .1 Verify that flow rate and pressure meet design criteria.
- .2 Make adjustments while flow rate or withdrawal is (1) maximum and (2) 25% of maximum and while pressure is (1) maximum and (2) minimum.

.4 Floor drains:
- .1 Verify operation of trap seal primer.
- .2 Prime, using trap primer. Adjust flow rate to suit site conditions.
- .3 Check operations of flushing features.
- .4 Check security, accessibility, removeability of strainer.
- .5 Clean out baskets.

.5 Roof drains:
- .1 Check location at low points in roof.
- .2 Check security, remove ability of dome.
- .3 Adjust weirs to suit actual roof slopes, meet requirements of design.
- .4 Clean out sumps.
- .5 Verify provisions for movement of roof systems.

.6 Access doors:
- .1 Verify size and location relative to items to be accessed.

.7 Cleanouts:
- .1 Verify covers are gas-tight, secure, yet readily removable.

.8 Wall hydrants:
- .1 Verify complete drainage, freeze protection.
- .2 Verify operation of vacuum breakers.

.9 Training:
- .1 Demonstrate full compliance with Design Criteria.

END OF SECTION

PART 1 GENERAL

1.1 SUMMARY

.1 The intent is for all ductwork and HVAC related equipment to remain clean during construction. The contractor shall provide the following activities specified during all construction activities.

.2 HVAC Protection:

.3 Seal off all supply, return and exhaust air system openings to prevent the accumulation of dust and debris in the systems at all times unless work is being completed on the immediate area of the system using plastic seals to the approval of the Consultant. This is to include overnight and longer work stoppages. All diffusers, grilles, registers, laminar flow diffusers etc. are also to be sealed in plastic.

.4 Keep all construction areas clean and neat as specified elsewhere in this specification.

.5 Where ductwork and equipment become contaminated due to inadequate protection these ducts will be cleaned as specified in Section 23 01 31 – Air Duct Cleaning Systems.

.6 Providing the consultant is satisfied that the activities as specified above have been performed through construction, the Section 23 01 31 – Air Duct Cleaning Systems shall be waived. The consultant reserves the right to enforce the Section 23 01 31 – Air Duct Cleaning Systems at their discretion.

.7 Refer to Section 23 05 01 – Use of HVAC Systems During Construction.

1.2 RELATED REQUIREMENTS

.1 Section 01 33 00 - Submittal Procedures.

.2 Section 01 78 00 - Closeout Submittals.

.3 Section 01 74 11 - Cleaning.

.4 Section 23 05 01 – Use of HVAC Systems During Construction.

.5 Section 23 31 13.01 – Metal Ducts – Low Pressure to 500 Pa

1.3 REFERENCES

.1 Definitions:
- .1 HVAC System: complete air duct system from outside air intake louvers to furthest air supply terminal unit and including:
  - .1 Rigid supply and return ductwork;
  - .2 Flexible ductwork;
  - .3 Mixing plenum boxes;
  - .4 Return air plenums including ceiling plenums;
  - .5 Cooling and heating coils and compartments;
  - .6 Condensate drain pans, eliminator blades and humidifiers;
  - .7 Fans, fan blades and fan housing;
  - .8 Filter housing and frames;
  - .9 Acoustically insulated duct linings;

.10 Diffusers, registers and terminal units;
.11 Dampers and controls;

.2 Reference Standards:
.1 National Air Duct Cleaners Association (NADCA)
.2 ACR Standard: Assessment, Cleaning and Restoration of HVAC Systems.
.3 North American Insulation Manufacturers Association (NAIMA)
.1 NAIMA, Cleaning Fibrous Glass Insulated Duct Systems - Recommended Practices.
.4 United States Environmental Protection Agency (US EPA)
.1 US EPA, 40 CFR Parts 152 and 156.

1.4 ACTION AND INFORMATIONAL SUBMITTALS

.1 Provide submittals in accordance with Section 01 33 00 - Submittal Procedures.

.2 Submit cleaning plan developed during site evaluation.
.1 Ensure plan includes sequence of operation, identification of camera and cleaning apparatus insertion points and schedule for work.

.3 Product Data:
.1 Submit manufacturer's printed product literature and data sheets for antimicrobial agents and include product characteristics, performance criteria and limitations.

1.5 CLOSEOUT SUBMITTALS

.1 Provide submittals in accordance with Section 01 78 00 - Closeout Submittals.

.2 Post Cleaning Inspection Report: submit 2 copies of Final Inspection Report, including data collected, observations and recommendations as well as following information:
.1 Name and address of facility;
.2 Name and address of HVAC cleaning contractor;
.3 Description of HVAC systems with drawings identifying systems cleaned;
.4 Identification scheme for location points in systems that were inspected with accompanying notes describing methods of inspection or tests used;
.5 Comments complete with photographs of each sampling location and other observed system features;
.6 Identify systems tested, observations, actions taken and recommendations for future maintenance.

PART 2 PRODUCTS

2.1 ACCESS DOORS AND PANELS

.1 Equipment Access Doors and Panels: construct from same materials as equipment paneling complete with sealing gasket and positive locking device.
.1 Size access doors and panels in equipment to allow for inspection and cleaning.

.2 Ductwork Access Doors: construct access doors from 1.27 minimum galvanized sheet steel with gasketed seal.
.1 Ensure access door is 25mm greater in every dimension than access opening.
.2 Access door size 200 mm x 200 mm minimum.
.3 Secure access doors with sheet metal screws on 75 mm centres minimum. Ensure 3

screws per side minimum.

.3 Access Doors and Panels Acoustic Lining:
- .1 Install acoustic lining to match existing.
- .2 Self-adhesive glass fiber tape capable of adhering to both acoustic lining and metal access door or panel materials.
- .3 Water-based duct sealer for repairing cut acoustic lining.

2.2 ANTIMICROBIAL AGENT

.1 Use antimicrobial agents registered with US EPA-40 CFR.

2.3 SYSTEM FILTERS

.1 Supply and install new filters for each HVAC System cleaned.

2.4 AIR DUCT CLEANING EQUIPMENT

.1 Manually propelled full contact brushes:
- .1 Ensure brushes are specifically manufactured and shaped to fit individual ducts, equipment and components of HVAC system.
  - .1 Ensure brushes are sized to fit various duct sizes in HVAC system.
- .2 Ensure brushes make scrubbing motion and full contact with HVAC system interior surfaces to be cleaned.

.2 Brushes: manually propelled with integrally-mounted motor and nylon or polypropylene or other non-metallic material bristles.
- .1 Ensure motor has capacity to continue to push brush after bristles are distorted.
- .2 Replace worn and ineffective brushes when required.

2.5 HEPA FILTER EVACUATION FAN

.1 Evacuation Fan: includes fan, HEPA filter, flexible hose and motor capable of maintaining debris and particulates airborne in airstream until they reach evacuation fan and maintaining system under negative pressure.
- .1 Ensure HEPA filters are clean and maintain evacuation fan and HEPA filter to run efficiently.

2.6 HEPA VACUUM UNIT

.1 Vacuum Unit: includes vacuum fan, integral HEPA filter, suction hose and vacuum head, capable of maintaining HVAC System debris and particulates airborne in air stream until they reach vacuum unit and maintaining system under negative pressure.
- .1 Ensure HEPA filters are clean and maintain vacuum unit and HEPA filter to run efficiently.

PART 3 EXECUTION

3.1 PREPARATION

.1 Close down HVAC system.

.2 Locate and identify externally visible HVAC system features which may affect cleaning process including:
- .1 Control devices;

.2 Fire and smoke control dampers;
.3 Balancing dampers: indicate and record positions for resetting;
.4 Air volume control boxes: indicate and record positions for resetting;
.5 Fire alarm devices;
.6 Monitoring devices and controls;

.3 Cut openings in equipment panels and ductwork for access to system interior.
.1 Square or rectangular opening sizes: 200 mm minimum each side.
.2 Circular opening sizes: 200mm minimum diameter.

.4 Installation of Access Doors and Panels: install access doors and panels for equipment where required to facilitate system inspection and cleaning.
.1 Install access doors and panels for inspection and cleaning of equipment as follows:
.1 Filters;
.2 Dampers;
.3 Sensors;

.5 Installation of Access Doors in Ductwork: install access doors in ductwork where required to facilitate system inspection and cleaning.
.1 Access door installation is not permitted in flexible ductwork.
.1 Inspect flexible ductwork only by disconnecting from main duct and inspecting from open end.

.6 When acoustically lined duct is cut for access, repair cut edges of acoustic lining using self-adhesive fibre glass tape and water based duct sealer.
.1 Adhere new acoustic lining to match existing to inside of access panel or door to ensure continuity of acoustic properties of system.

.7 Remove and reinstall ceiling tiles to gain access to HVAC system as required.
.1 Replace ceiling tiles damaged or soiled by air duct cleaning procedures.

3.2 EXAMINATION / PRE-CLEANING INSPECTION

.1 Verification of Conditions:
.1 Make visual inspection of interior of HVAC system using remote controlled robotic camera.
.2 Insert camera at pre-established strategic locations to evaluate condition and cleanliness of HVAC systems and components.

.2 Evaluation and Assessment:
.1 Identify location and type of internal components.
.2 Identify extent of potential problems.

3.3 DUCT CLEANING

.1 Do duct cleaning in accordance with NADCA ACR Standard.

.2 Isolate and clean sections in zones to ensure that dirt deposits and debris from zone being cleaned does not pass through another zones which has already been cleaned.
.1 Isolate zone of duct using closed-cell polyurethane foam or air inflated zone bag before cleaning.

.3 Ensure vacuum units and evacuation fans are securely in place before starting cleaning operation of isolated section of HVAC air duct system.

.4 Install HEPA filter evacuation fan at one end of zone section and insert full contact brushes at other end.

.5 Clean HVAC supply air duct system and components where particulate sample collected from surfaces is greater than 75 mg of particulate per 0.01 square metres.

.6 Clean exhaust, return, transfer ductwork and plenums, equipment and components where particulate sample collected from surfaces is greater than 75mg of particulate per 0.01 square metres.

.7 Energize brushes to travel from insertion point to HEPA filter evacuation fan.
- .1 Pass brushes through sections as often as necessary to achieve required cleanliness.
- .2 Change brush sizes as required to ensure positive contact with duct and component interiors.
- .3 Clean corners and pockets where dirt and debris can accumulate.

.8 Clean equipment, components and other features in isolated zone before moving to next zone of HVAC air duct system.

.9 Clean diffusers, registers, louvers, fan coils and cassette and other terminal units.

3.4 ACOUSTICALLY LINED DUCTWORK CLEANING

.1 Clean glass fibre acoustically insulated ducts to NAIMA recommended practices.
- .1 Use specifically designed robotic apparatus that has been demonstrated not to damage acoustic glass fibre lining.
- .2 Monitor cleaning process progress by onboard camera.

3.5 COMPONENTS AND EQUIPMENT CLEANING

.1 Brush and vacuum rooftop unit surfaces to achieve required cleanliness.

.2 When cleaning equipment and components by brushing and vacuuming is inappropriate or insufficient, dismantle and remove equipment or component and move to area designated by Consultant for cleaning.
- .1 Pressure wash with water and cleaning solution until required cleanliness is achieved.
- .2 Clean equipment and components in place only if there is no hazard to adjacent materials.

.3 Compressed air and manual cleaning is acceptable only for cleaning individual components and small areas as follows:
- .1 Fan blades;
- .2 Dampers;
- .3 Turning vanes;
- .4 Controls;
- .5 Sensor bulbs;
- .6 Fire alarms;
- .7 Smoke detectors;

3.6 FIELD QUALITY CONTROL/FINAL INSPECTIONS

.1 Post Cleaning Inspection: Carry out a visual final inspection and provide photo documentation after final cleaning has been completed.
- .1 Identify on HVAC system record drawings access points used for inspection and cleaning.
- .2 Reset components including dampers and sensors, which have been disturbed during cleaning operations.

3.7 SYSTEM STARTUP

.1 Install new system filters after cleaning operations are completed.

.2 Cover each inspection opening with access door or panel and secure in place after inspection and cleaning are completed.

.3 Restart each HVAC system.

3.8 CLEANING

.1 Clean in accordance with Section 01 74 11 - Cleaning.

END OF SECTION

PART 1 GENERAL

1.1 SUMMARY

.1 Section Includes:
- .1 Use of mechanical systems during construction.

.2 Related Sections:
- .1 Section 21 05 01 Common Work Results Mechanical
- .2 Section 23 01 31 Air Duct Cleaning for HVAC Systems
- .3 Section 23 05 93 HVAC Testing, Adjusting and Balancing

1.2 USE OF SYSTEMS

.1 Use of new and existing HVAC systems for supplying temporary heat or ventilation is not permitted except where specifically noted on drawings by Consultant.

.2 Provide Air Duct Cleaning per specification section 23 01 31. This is applicable for all existing ductwork being re-used as part of this project, all systems utilized for temporary means during construction and at the discretion of the Consultant for new duct systems at the discretion of the consultant that are impacted by constructions activities.

PART 2 PRODUCTS

2.1 NOT USED

.1 Not Used.

PART 3 EXECUTION

3.1 NOT USED

.1 Not Used.

END OF SECTION

PART 1 GENERAL

1.1 SUMMARY

.1 Co-operate and co-ordinate with the requirements of other units of work specified in other sections.

.2 Provide complete piping system including:
- .1 Glycol heating system
- .2 Refrigerant piping
- .3 Plumbing systems (domestic, sanitary, storm and acid resistant piping)
- .4 Natural gas piping system

1.2 RELATED REQUIREMENTS

.1 Section 22 11 16 – Domestic Waster Piping Copper

.2 Section 22 13 18 – Drainage Waster and Vent Piping – Plastic

.3 Section 23 11 23 – Facility Natural Gas Piping

.4 Section 23 21 13.01 – Hydronic Systems Copper

1.3 REFERENCES

.1 Canadian General Standards Board (CGSB)
- .1 CAN/CGSB-1.181, Ready-Mixed Organic Zinc-Rich Coating.

.2 National Fire Code of Canada (NFCC 2005)

.3 Ontario Building Code

.4 CSA B149.1 – Natural Gas Code

1.4 ACTION AND INFORMATIONAL SUBMITTALS

.1 Provide submittals in accordance with Section 01 33 00 - Submittal Procedures.

.2 Product Data:
- .1 Provide manufacturer's printed product literature, specifications and datasheets for piping and equipment and include product characteristics, performance criteria, physical size, finish and limitations.

1.5 DELIVERY, STORAGE AND HANDLING

.1 Deliver, store and handle materials in accordance with Section 01 61 00 - Common Product Requirements and with manufacturer's written instructions.

.2 Delivery and Acceptance Requirements:
- .1 Deliver materials to site in original factory packaging, labelled with manufacturer's name, address.

PART 2 PRODUCTS

2.1 MATERIAL

.1 Refer to appropriate specifications section for the service.

.2 Paint: zinc-rich to CAN/CGSB-1.181.
  .1 Primers, Paints: in accordance with manufacturer's recommendations for surface conditions.

.3 Sealants: in accordance with Section 07 92 00 - Joint Sealants.

.4 Fire Stopping: in accordance with Section 07 84 00 - Fire Stopping. (All firestopping and smoke sealing required for mechanical service penetrations of rated walls, floors and partitions shall be the responsibility of Division 7).

PART 3 EXECUTION

3.1 APPLICATION

.1 Manufacturer's Instructions: comply with manufacturer's written recommendations, including product technical bulletins, handling, storage and installation instructions, and datasheets.

3.2 PIPING PREPARATION

.1 Cut all piping square. Remove all burrs and slivers by filing.

.2 Thoroughly clean copper pipe and fittings over entire contact surface before applying flux. Use non-corrosive flux only.

.3 Threads in pipe and fittings shall be standard taper pipe thread. Make joints full length, full depth, clean cut, smooth, strong and free of imperfect threads.

.4 Ream and countersink all threaded pipe ends to remove burrs. Wipe finished joints clean.

.5 Clean all rust scale, paint, oil, or foreign matter from pipe surfaces prior to welding.

3.3 PIPING CONNECTIONS

.1 Provide threaded joints for steel pipe 2” and smaller and welded joints for pipe 2 ½” and larger.

.2 Use main sized saddle type weldolet branch connections. In steel pipe, branch lines may be directly connected to the main if the main is at least two times the branch size, for up to 6” mains, or if the main is at least 3 times the branch size for 8” and larger mains. Do not project branch lines inside main.

.3 Cut openings in mains for Weldolets neatly and sized to suit fitting. Clean slag from inside of opening.

.4 Assemble steel to cast iron flanged joints using flat faced steel flanges and full faced gaskets only.

.5 Fit all flanged joints uniformly on contact faces of gaskets. Extend all bolts completely through their nuts. Use a mixture of graphite and oil or an anti-seize compound on all bolts.

.6 Fit threaded joints using good quality pipe joint cement or teflon tape on male threads only. All joint compounds to be compatible with type of service pipe will carry.

.7 Provide non-conducting type connections wherever jointing dissimilar metals. Brass adaptors and valves are acceptable.

.8 Provide MJ couplings consisting of neoprene sleeve and stainless steel shield and clamps, for plain end cast iron pipe.

.9 Use fittings with joints suitable for the type of pipe employed. Provide fittings of equal quality and thickness as the pipe to which they are attached.

3.4 CONNECTIONS TO EQUIPMENT

.1 In accordance with manufacturer's instructions unless otherwise indicated.

.2 Use valves and either unions or flanges for isolation and ease of maintenance and assembly.

.3 Use double swing joints when equipment mounted on vibration isolation and when piping subject to movement.

3.5 CLEARANCES

.1 Provide clearance around systems, equipment and components for observation of operation, inspection, servicing, maintenance and as recommended by manufacturer.

.2 Provide space for disassembly, removal of equipment and components as recommended by manufacturer AND as indicated without interrupting operation of other system, equipment, components.

3.6 DRAINS

.1 Install piping with grade in direction of flow except as indicated.

.2 Install drain valve at low points in piping systems, at equipment and at section isolating valves.

.3 Pipe each drain valve discharge separately to above floor drain.
.1 Discharge to be visible.

.4 Drain valves: NPS 3/4 gate or globe valves unless indicated otherwise, with hose end male thread, cap and chain.

3.7 AIR VENTS

.1 Install air vents where indicated on Drawings and on all high points of closed water systems. Fit with manual isolation cocks.

.2 Provide safe drain fittings and copper drain tubing to nearest drain point, for air vents installed in areas where leakage could cause damage.

.3 Install drain piping to approved location and terminate where discharge is visible.

3.8 DIELECTRIC COUPLINGS

.1 General: compatible with system, to suit pressure rating of system.

.2 Locations: where dissimilar metals are joined.

.3 NPS 2 and under: isolating unions or bronze valves.

.4 Over NPS 2: isolating flanges.

3.9 PIPEWORK INSTALLATION

.1 Screwed fittings jointed with Teflon tape.

.2 Protect openings against entry of foreign material.

.3 Install to isolate equipment and allow removal without interrupting operation of other equipment or systems.

.4 Assemble piping using fittings manufactured to ANSI standards.

.5 Saddle type branch fittings may be used on mains if branch line is no larger than half size of main.
.1 Hole saw (or drill) and ream main to maintain full inside diameter of branch line prior to welding saddle.

.6 Install exposed piping, equipment, rectangular cleanouts and similar items parallel or perpendicular to building lines.

.7 Install concealed pipework to minimize furring space, maximize headroom, conserve space.

.8 Slope piping, except where indicated, in direction of flow for positive drainage and venting.

.9 Install, except where indicated, to permit separate thermal insulation of each pipe.

.10 Group piping wherever possible and as indicated.

.11 Ream pipes, remove scale and other foreign material before assembly.

.12 Use eccentric reducers at pipe size changes to ensure positive drainage and venting.

.13 Install pipe straight, true and parallel, clean and free of rust and scale. Cap exposed ends during construction to prevent entrance of foreign material.

.14 Provide clearance for proper installation of insulation and for access to valves, air vents, drains, unions, etc.

.15 Provide approved plugs or caps on all lines left for future connection.

.16 Run branch lines to fixtures, tanks, pumps, and other items of mechanical equipment to sizes shown on the drawings, regardless of whether tappings smaller than pipe size shown are provided.

.17 Cut piping to measurements taken at the site and work into place without spring.

.18 Make all connections to equipment and branch mains with unions or flanges. Provide flexible connections, vibration and expansion connectors at equipment as indicated.

.19 Do not use bushings. Make reductions in water pipe sizes with eccentric reducing fittings installed so that top of mains form a straight line, free from air pockets.

.20 Install piping to allow expansion and contraction without unduly stressing pipe or connected equipment. Provide for expansion compensation where pipe runs past building expansion joints. Locate and size expansion joints or loops to permit an expansion 50 percent greater than that required. Provide expansion loops where possible but where impracticable owing to space considerations provide an approved type of proprietary expansion compensator complete with pipe anchors and guides.

.21 Repair all pipe coatings and linings after welding to the original condition Valves:
- .1 Install in accessible locations.
- .2 Remove interior parts before soldering.
- .3 Install with stems above horizontal position unless indicated.
- .4 Valves accessible for maintenance without removing adjacent piping.
- .5 Install globe valves in bypass around control valves.
- .6 Use gate, ball or butterfly valves at branch take-offs for isolating purposes except where specified.
- .7 Install butterfly valves between weld neck flanges to ensure full compression of liner.
- .8 Use chain operators on valves NPS 2 1/2 and larger where installed more than 2400 mm above floor in Mechanical Rooms.

.22 Check Valves:
- .1 Install silent check valves on discharge of pumps and in vertical pipes with downward flow and as indicated.
- .2 Install swing check valves in horizontal lines on discharge of pumps and as indicated.

3.10 UNIONS, COUPLINGS, STRAINERS, ARRESTORS

.1 Install unions and couplings where indicated on Drawings and at all equipment, to allow disassembly.

.2 Install strainers on supply lines upstream of all automatic control devices, pressure regulating valves, circulator pumps.

.3 Install water hammer arresters on hot and cold supply lines at quick closing valves and each fixture or group of fixtures to prevent water hammer. Install between fixtures being served and supply main. Install additional units on risers. Size arresters in accordance with manufacturer's standards and Plumbing and Drainage Institute WH201.

.4 Air chambers may be installed in lieu of water hammer arresters provided no more than 3 fixtures are serviced by each air chamber.

.5 Protect entire water distribution system against contamination due to backflow from non-potable sources. Refer to AWWA manual for cross connection control. Provide an approved backflow preventer for each connection to fixture or equipment for which approved air gap or vacuum breaker is not shown or specified elsewhere (e.g. in connection with fixture or equipment itself). Provide isolating valves and valved bypass, for each backflow preventer.

.6 Install flexible connectors immediately adjacent to equipment subject to vibration and where indicated on the Drawings. Secure other end to prevent shaking or excessive movement.

3.11 VALVES

.1 Install all valves indicated on Drawings or necessary for proper control and isolation of piping and equipment. All valves are to suit the particular service required.

.2 All valves of similar type to be of one manufacturer.

.3 Check all valves for specified criteria and proper operation before installation.

.4 Orientate handwheels or operators as indicated on Drawings. When not indicated, orientate to most convenient location for operation.

.5 Provide access to concealed valves.

.6 Provide valves and piping that are compatible to avoid galvanic corrosion.

.7 Use gate valves for shut-off valves unless indicated otherwise.

.8 Lead Free Ball valves shall be used for shut-off valves on potable water systems.

.9 Use globe valves for throttling service or where specifically indicated for shut-off service. Use globe valves for meter by-pass.

.10 Use gate and globe valves with rising stems except where lack of space exists because of obstructions, in which case use non-rising stems.

.11 Provide drain valves at main shut-off valves, and at low points of piping and equipment.

.12 Provide isolating valves for each piece of equipment, including heating elements.

3.12 WATER TREATMENT

.1 Provide chemical treatment equipment for each of the following systems:
.1 Glycol heating

.2 Provide for the all systems, a pot feeder and micron filter c/w isolating valves, removable cap, as shown on the equipment schedules and the schematic, plus a 12 month supply of chemicals and a test kit.

.3 Standard of Acceptance: Neptune, Dearborn, Bird Archer, Pace, IPAC Chemicals.

.4 Provide independent third party water testing of all systems by local water testing agency.

.5 Provide a 50% solution of propylene glycol in the glycol heating system after system has been chemically cleaned. Standard of acceptance: Dowtherm

3.13 PIPE ROUTING AND GRADES

.1 Route piping in an orderly manner, maintaining proper grades. Install to conserve headroom and interfere as little as possible with use of the space. Run exposed pipe parallel to walls. Group pipes wherever practical. Install concealed piping close to building structure to keep furring to a minimum.

.2 Conceal piping in ceiling spaces and partitions where possible, except in mechanical room. Where pipes cannot be concealed, obtain details of pipe run from the Consultant.

.3 Slope water piping 0.25% and arrange for drainage at low points; provide proper air relief.

.4 Equip low points of all closed systems with ¾” drain valves and hose nipples. Provide high capacity float operated automatic air vents at all high points.

.5 Install storm and sanitary drains to invert elevations and slopes indicated on the drawings. Where invert elevations and slopes are not shown install piping to the minimum requirements of the Plumbing Code, generally 2% minimum slope for sizes 3” and smaller, and for all branch lines, and 1% minimum slope for building drains 4” and larger.

.6 Install drain lines from drain points in concealed locations or inaccessible areas to nearest floor drain.

3.14 SLEEVES

.1 General: install where pipes pass through masonry, concrete structures, fire rated assemblies, and as indicated.

.2 Material: schedule 40 black steel pipe.

.3 Construction: use annular fins continuously welded at mid-point at foundation walls and where sleeves extend above finished floors.

.4 Sizes: 6 mm minimum clearance between sleeve and uninsulated pipe or between sleeve and insulation.

.5 Installation:
- .1 Concrete, masonry walls, concrete floors on grade: terminate flush with finished surface.
- .2 Other floors: terminate 25 mm above finished floor.
- .3 Before installation, paint exposed exterior surfaces with heavy application of zinc-rich paint to CAN/CGSB-1.181.

.6 Sealing:
- .1 Foundation walls and below grade floors: fire retardant, waterproof non-hardening mastic.
- .2 Elsewhere:
  - .1 Provide space for firestopping.
  - .2 Maintain fire rating integrity.
- .3 Sleeves installed for future use: fill with lime plaster or other easily removable filler.
- .4 Ensure no contact between copper pipe or tube and sleeve.

3.15 ESCUTCHEONS

.1 Install on pipes passing through walls, partitions, floors, and ceilings in finished areas.

.2 Construction: one piece type with set screws.
- .1 Chrome or nickel plated brass or type 302 stainless steel..

.3 Sizes: outside diameter to cover opening or sleeve.
- .1 Inside diameter to fit around pipe or outside of insulation if so provided.

3.16 PREPARATION FOR FIRE STOPPING

.1 All firestopping and smoke sealing required for mechanical service penetrations of rated walls, floors and partitions shall be the responsibility of Division 7. Firestopping within annular space between pipes, ducts, insulation and adjacent fire separation in accordance with Section 07 84 00 - Fire Stopping.

.2 Uninsulated unheated pipes not subject to movement: no special preparation.

.3 Uninsulated heated pipes subject to movement: wrap with non-combustible smooth material to permit pipe movement without damaging fires topping material or installation.

.4 Insulated pipes and ducts: ensure integrity of insulation and vapour barriers.

3.17 FLUSHING OUT OF PIPING SYSTEMS

.1 Flush system in accordance with Section 23 08 02 - Cleaning and Start-up of Mechanical Piping Systems.

3.18 PRESSURE TESTING OF EQUIPMENT AND PIPEWORK

.1 Conduct tests and pay for all associated work including making good and re-testing when required.

.2 Notify Consultant 48 hours in advance of date when tests will be conducted.

.3 Make sure all work has been tested and approved prior to insulating or concealing.

.4 Carry out tests in the presence of the Consultant and the Authority having jurisdiction.

.5 Forward written test results to the Consultant.

.6 Schedule of Tests:

Service Test	Testing Pressure	Fluid	Duration
Water Systems	200 psi	Water	2 hours
Natural Gas	75 psi	Air	24 hours
Drainage Systems	5 psi	Water	6 hours

.1 Carry out tests on the natural gas system in accordance with applicable codes and regulations.
.2 Carry out tests on the water supply and drainage systems in accordance governing bodies.
.3 Leave all work uncovered until completion of testing. However, should the construction schedule require that work be covered, carry out tests on portions of system prior to system completion. Give a minimum of 48 hours notice to Consultant of such prior testing.

.7 Pipework: test as specified in relevant sections of heating, ventilating and air conditioning work.

.8 Prior to tests, isolate equipment and other parts which are not designed to withstand test pressure or media.

.9 Pay costs for repairs or replacement, retesting, and making good.

.10 Insulate or conceal work only after approval and certification of tests.

3.19 CLEANING

.1 Clean in accordance with Section 01 74 11 - Cleaning.
.1 Remove surplus materials, excess materials, rubbish, tools and equipment.

.2 At all times keep the premises free from accumulations of waste material or rubbish caused by employees or work, and at the completion of the work, remove all rubbish and all tools, equipment and surplus materials from and about the work and leave the work "broom clean" or its equivalent, unless more exactly specified.

END OF SECTION

PART 1 - GENERAL

1.1 SUMMARY

.1 Section Includes:
- .1 Electrical motors, drives and guards for mechanical equipment and systems.
- .2 Refer to the Powered Equipment Schedule in Division 26 for the division of responsibility related

1.2 RELATED SECTIONS

.1 Section 01 33 00 - Submittal Procedures

.2 Section 01 78 00 - Closeout Submittals

.3 Section 21 05 01 – Common Work Results for Mechanical.

.4 Section 23 23 00 – Pumps

.5 Section 23 34 00 – HVAC Fans

.6 Section 26 60 00 – Powered Equipment Schedule

1.3 REFERENCES

.1 American Society of Heating, Refrigeration and Air-Conditioning Engineers (ASHRAE)
- .1 ASHRAE 90.1, Energy Standard for Buildings Except Low-Rise Residential Buildings

.2 Electrical Equipment Manufacturers' Association Council (EEMAC)

.3 NEMA MG1-1993, Revision1, Part 31, Section IV

1.4 SUBMITTALS

.1 Shop Drawings:
- .1 Submit shop drawings in accordance with Section 01 33 00 - Submittal Procedures.
- .2 Indicate the following:
  - .1 Product description, model number, dimensions, unit weights, electrical information and motor efficiency

1.5 QUALITY ASSURANCE

.1 Manufacturer’s Certification: The motor manufacturer shall certify the following:
- .1 The products and systems furnished are in strict compliance with the specifications.
- .2 Comply with the energy requirements of the latest edition of ASHREA 90.1.
- .3 The specified factory tests have been performed.
- .4 The equipment furnished contains inter-changeable parts with specified equipment so that all major equipment parts can be obtained from the specified manufacturer.

.2 Contractor Certification: The Contractor shall certify the following:
- .1 The products and systems installed are in strict compliance with the specifications and all applicable local or state codes.

.2 The specified field tests have been satisfactorily performed.
.3 The equipment furnished contains inter-changeable parts with specified equipment so that all major equipment parts can be obtained from the specified manufacturer.

1.6 DELIVERY, STORAGE, AND HANDLING

.1 Packing, shipping, handling and unloading:
.1 Deliver, store and handle in accordance with manufacturer's written instructions and Section 01 61 00 - Common Product Requirements.

PART 2 PRODUCTS

2.1 GENERAL

.1 Provide all motors for equipment specified unless noted otherwise

.2 All motors of 1HP or larger shall be premium efficiency

.3 In general, provide motors with open drip proof (ODP) enclosures except provide totally enclosed fan cooled (TEFC) enclosures for motors located in plenums, in dusty environments or where exposed to outdoor temperatures.

.4 Provide explosion proof motors as required by code.

2.2 MOTORS

.1 Motors under 1/2 HP: speed as indicated, continuous duty, built-in overload protection, resilient mount, single phase, 120 V, unless otherwise specified or indicated.

.2 Motors over 1/2 HP: speed as indicated, continuous duty, built-in overload protection, resilient mount, three phase, 208/600 V, unless otherwise specified or indicated.

.3 All motors shall be minimum EEMAC Design B, squirrel cage induction, speed as indicated, drip proof, ball bearing continuously rated with Class ‘B’ temperature rise in ambient temperature not exceeding 100F, Class F insulation, service factor 1.15, unless noted otherwise or conflicting with electrical area classification.
.1 Where motors are fed from Variable Frequency Drives (VFD), they are to comply with NEMA MG-1-1993, Revision1, Part 31, Section IV “Performance Standards Applying to All Machines”, Part 31 – “Definite Purpose Inverter-Fed Motors”.

.4 For motors exposed to outdoor temperatures, lubricate with lubricants suitable for operation at the specified minimum outdoor temperature.

2.3 BELT DRIVES

.1 Fit reinforced belts in sheave matched to drive. Multiple belts to be matched sets.

.2 Use cast iron or steel sheaves secured to shafts with removable keys unless otherwise indicated.

.3 For motors under 10 HP: standard adjustable pitch drive sheaves, having plus or minus 10% range. Use mid-position of range for specified r/min.

.4 For motors 10 HP and over: sheave with split tapered bushing and keyway having fixed pitch unless specifically required for item concerned. Provide sheave of correct size to suit balancing.

.5 Correct size of sheave determined during commissioning.

.6 Minimum drive rating: 1.5 times nameplate rating on motor. Keep overhung loads within manufacturer's design requirements on prime mover shafts.

.7 Motor slide rail adjustment plates to allow for centre line adjustment.

.8 Supply one set of spare belts for each set installed in accordance with Section 01 78 00 - Closeout Submittals

2.4 DRIVE GUARDS

.1 Provide guards for unprotected drives.

.2 Guards for belt drives;
- .1 Expanded metal screen welded to steel frame.
- .2 Minimum 1.2 mm thick sheet metal tops and bottoms.
- .3 38 mm dia holes on both shaft centres for insertion of tachometer.
- .4 Removable for servicing.

.3 Provide means to permit lubrication and use of test instruments with guards in place.

.4 Install belt guards to allow movement of motors for adjusting belt tension. -

.5 Guard for flexible coupling:
- .1 "U" shaped, minimum 1.6 mm thick galvanized mild steel.
- .2 Securely fasten in place.
- .3 Removable for servicing.

.6 Unprotected fan inlets or outlets:
- .1 Wire or expanded metal screen, galvanized, 19 mm mesh.
- .2 Net free area of guard: not less than 80% of fan openings.
- .3 Securely fasten in place.
- .4 Removable for servicing.

2.5 SHAFT COUPLINGS

.1 Provide shaft couplings of the pin or jaw neoprene insert type, gear type or flexing steel insert type.

.2 Make sure that the coupling can be easily removed without disassembly of the equipment.

.3 Die-cast couplings are not acceptable.

PART 3 EXECUTION

3.1 MANUFACTURER'S INSTRUCTIONS

.1 Compliance: comply with manufacturer's written recommendations or specifications, including product technical bulletins, handling, storage and installation instructions, and datasheet.

3.2 INSTALLATION

.1 Fasten securely in place.

.2 Make removable for servicing, easily returned into, and positively in position.

3.3 CLEANING

.1 Proceed in accordance with Section 01 74 11 - Cleaning

.2 Upon completion and verification of performance of installation, remove surplus materials, excess materials, rubbish, tools and equipment.

END OF SECTION

PART 1 GENERAL

1.1 SECTION INCLUDES

.1 Materials and installation for thermometers and pressure gauges in piping systems.

1.2 RELATED SECTIONS

.1 Section 01 33 00 - Submittal Procedures.

.2 Section 01 74 19 - Waste Management and Disposal.

.3 Section 21 05 01 - Common Work Results for Mechanical

.4 Section 23 05 05 - Installation of Pipework

.5 Section 23 05 53.01 - Mechanical Identification.

1.3 REFERENCES

.1 American Society of Mechanical Engineers (ASME).
- .1 ASME B40.100, Pressure Gauges and Gauge Attachments.
- .2 ASME B40.200, Thermometers, Direct Reading and Remote Reading.

.2 Canadian General Standards Board (CGSB).
- .1 CAN/CGSB-14.4, Thermometers, Liquid-in-Glass, Self Indicating, Commercial/Industrial Type.
- .2 CAN/CGSB-14.5, Thermometers, Bimetallic, Self-Indicating, Commercial/Industrial Type.

1.4 SUBMITTALS

.1 Submittals in accordance with Section 01 33 00 - Submittal Procedures.

.2 Submit shop drawings and product data.

.3 Submit manufacturer's product data for following items:
- .1 Thermometers.
- .2 Pressure gauges.

PART 2 PRODUCTS

2.1 GENERAL

.1 Design point to be at mid point of scale or range.

2.2 DIRECT READING THERMOMETERS

.1 Industrial style, mercury in glass, red reading, black numerals, aluminum case, glass window, adjustable angle, 9” long, variable angle type with separable well.

.2 Fahrenheit scale, selected so normal operating point is approximately mid scale; 1% accuracy.

.3 Standard of Acceptance: Weksler AA5, Trerice, Weis.

2.3 REMOTE READING THERMOMETERS

.1 100 mm diameter liquid filled activated dial type: to CAN/CGSB-14.5 ASME B40.200, accuracy within one scale division, brass movement, stainless steel capillary, stainless steel spiral armour, stainless steel bulb and polished brass case for wall mounting.

2.4 THERMOMETER WELLS

.1 Copper pipe: copper or bronze.

.2 Steel pipe: brass or stainless steel.

.3 Separable socket suitable for stem type thermometer with gasket and cap.

2.5 PRESSURE GAUGES

.1 Dial size 4 ½”, aluminium case, chrome ring, bronze movement, phosphor bronze bourdon tube.

.2 Imperial scale (psi) selected so that normal operating point is approximately mid scale; 1% accuracy

.3 Accessories - lever handle cock

.4 Standard of Acceptance: Weksler BA1, Trerice, Weis

.5 Provide:
- .1 Snubber for pulsating operation.
- .2 Diaphragm assembly for corrosive service.
- .3 Gasketted pressure relief back with solid front.
- .4 Bronze stop cock.

PART 3 EXECUTION

3.1 GENERAL

.1 Install so they can be easily read from floor or platform. If this cannot be accomplished, install remote reading units.

.2 Install between equipment and first fitting or valve.

3.2 THERMOMETERS

.1 Install in wells on piping. Provide heat conductive material inside well.

.2 Install in locations as in indicated and on inlet and outlet of:
- .1 Heating and cooling coils.
- .2 Boilers.
- .3 Low loss header
- .4 DHW Heaters.

.3 Install wells for balancing purposes.

.4 Use extensions where thermometers are installed through insulation.

3.3 PRESSURE GAUGES

.1 Install in following locations:
- .1 Suction and discharge of pumps.
- .2 Upstream and downstream of PRV's.
- .3 Upstream and downstream of control valves.
- .4 Inlet and outlet of coils.
- .5 Outlet of boilers.
- .6 In other locations as indicated.

.2 Install gauge cocks for balancing purposes, elsewhere.

.3 Use extensions where pressure gauges are installed through insulation.

3.4 NAMEPLATES

.1 Install engraved lamicoid nameplates as specified in Section 23 05 53.01 - Mechanical Identification, identifying medium.

END OF SECTION

PART 1 GENERAL

1.1 SUMMARY

.1 Section Includes:
- .1 Domestic Water Systems (Hot and Cold) (Lead Free) up to 200psig.
- .2 Specialties

.2 Use the following valves for all piping systems provided by this Section, unless specified otherwise. Use rising stem where space permits. Use flanged, screwed or solder ends to suit pipe lines, and non-heating malleable iron handles.

.3 Use only industrial class valves meeting ANSI, ASTM, ASME and applicable MSS standards. Specification MSS-SP-80, MSS-SP-110, MSS-SP-70, 85, 71, MSS-SP-72, MSS-SP-67.

1.2 RELATED SECTIONS

.1 Section 01 33 00 - Submittal Procedures

.2 Section 01 74 19 - Waste Management and Disposal.

.3 Section 01 78 00 - Closeout Submittals.

.4 Section 21 05 01 - Common Work Results for Mechanical

.5 Section 23 05 05 - Installation of Pipework.

.6 Section 22 11 16 - Domestic Water Piping – Copper

1.3 REFERENCES

.1 Conform to requirements of ANSI, ASTM, ASME, and applicable MSS standards.

1.4 SUBMITTALS

.1 Submittals in accordance with Section 01 33 00 - Submittal Procedures.

.2 Product Data:
- .1 Submit shop drawings and product data in accordance with Section 01 33 00 - Submittal Procedures.
- .2 Submit data for valves specified in this section.

.3 Closeout Submittals:
- .1 Submit maintenance data for incorporation into manual specified in Section 01 78 00 - Closeout Submittals.

1.5 QUALITY ASSURANCE

.1 Provide valves of same manufacturer throughout, where possible.

.2 Provide valves with manufacturer’s name and pressure rating clearly marked on body (per MSS-SP-25).

.3 Product shall carry CRN (Canadian Registration Number) valid in the Province of Ontario

1.6 DELIVERY STORAGE AND DISPOSAL

.1 Packing, shipping, handling and unloading:
- .1 Deliver, store and handle in accordance with manufacturer's written instructions and Section 01 61 00 - Common Product Requirements.

PART 2 PRODUCTS

2.1 GENERAL DESIGN SPECIFICATIONS

.1 Valves:
- .1 Except for specialty valves, to be single manufacturer.
- .2 All products to have CRN registration numbers.

.2 Valve Materials
- .1 Bronze: to ASTM B62 (406F / 208C) or B61 (550F / 288C) as applicable.
- .2 Brass: to ASTM B283 C3770.

.3 Valve Markings
- .1 All pressure ratings, manufacturer’s trademark and size to conform as per MSS-SP-25.

.4 End Connections:
- .1 Threaded ends to: ASME B1.20.1
- .2 Solder ends to: ASME B16.18
- .3 Flanged ends to: ASME B16.1 (Class 125)
- .4 Face To Face dimensions to: ASME B16.10
- .5 Fanged ends to: ASME B16.5
- .6 Butt Weld Ends to: ASME 16.25
- .7 Socket Weld Ends to: ASME B.16.11
- .8 EZ Press – STANDARD

.5 Testing & Design:
- .1 MSS-SP-80 - Bronze, Gate & Check Valves.
- .2 MSS-SP-110 - Ball Valves.
- .3 MSS-SP-72 - American Valve

2.2 DOMESTIC WATER SYSTEMS (HOT AND COLD) (LEAD FREE) UP TO 200PSIG.

.1 Ball Valves - For Isolation and Balancing Service Potable Water Service.
- .1 For sizes 50 mm and under, use 1034 kPa (150 psig) / 600 W.O.G., Brass Body to ASTM C49300 (Lead Free Brass), Full Port, PTFE Seats, Double “O” Ring or Teflon packing, TEA Plated Forged Brass C49300 Vented Solid Ball, Blowout Proof Stem, NSF 61, Lever Handle.
  - .1 Screwed Ends
  - .2 Kitz 858
  - .3 Toyo 5044A LF
  - .4 MAS B3 LF
  - .5 Solder Ends
  - .6 Kitz 859
  - .7 Toyo 5049A LF
  - .8 MAS B4LF
- .2 For sizes 65 mm and over, Use Class 150 Stainless Steel A351 CF8M Body, SS Ball & Stem, PTFE packing, Hypatite or PTFE seats, locking lever operated (Use gear operated for 8” & 10”)

.1 Kitz 150UTBZM (Full Port)
.2 Kitz 150UTAM (Reduced Port)
.3 MAS F-150-SS-F-N (Full Port)
.4 MAS F-150-SS-R-N (Reduced Port)

.3 Option: Sizes 50mm and higher: Epoxy Coated Cast Iron Body Flanged, Teflon Fused solid Ball, Full Port Rated 200W @ 200F Class VI positive shutoff, 100% Lead Free Ansi NSF 61-8.

.4 American Ball valve Model #3700

PART 3 EXECUTION

3.1 INSTALLATION

.1 Install rising stem valves in upright position with stem above horizontal.

.2 Remove internal parts before soldering.

.3 Install valves with unions at each piece of equipment arranged to allow servicing, maintenance, and equipment removal.

END OF SECTION

PART 1 GENERAL

1.1 SUMMARY

.1 Section Includes:
- .1 Concrete housekeeping pads, hangers and supports for mechanical piping, ducting and equipment.

1.2 RELATED SECTIONS

.1 Section 21 05 01 - Common Work Results for Mechanical

.2 Section 23 05 05 - Installation of Pipework.

1.3 REFERENCES

.1 Conform to relevant ANSI, ASME, ASTM, Factory Mutual (FM), and ULC requirements.

1.4 SYSTEM DESCRIPTION

.1 Design Requirements:
- .1 Construct pipe hanger and support to manufacturer's recommendations utilizing manufacturer's regular production components, parts and assemblies.
- .2 Base maximum load ratings on allowable stresses prescribed by MSS SP 58. ASME B31.1.
- .3 Ensure that supports, guides, anchors do not transmit excessive quantities of heat to building structure.
- .4 Design hangers and supports to support systems under conditions of operation, allow free expansion and contraction, prevent excessive stresses from being introduced into pipework or connected equipment.
- .5 Provide for vertical adjustments after erection and during commissioning. Amount of adjustment in accordance with MSS SP 58.

1.5 SUBMITTALS

.1 Submittals: in accordance with Section 01 33 00 - Submittal Procedures.

.2 Submit shop drawings and product data for following items:
- .1 Bases, hangers and supports.
- .2 Connections to equipment and structure.

1.6 DELIVERY, STORAGE, AND HANDLING

- .1 Packing, shipping, handling and unloading:
- .2 Deliver, store and handle in accordance with Section 01 61 00 - Common Product Requirements.
- .3 Deliver, store and handle materials in accordance with manufacturer's written instructions.

PART 2 PRODUCTS

2.1 GENERAL

.1 Fabricate hangers, supports and sway braces in accordance with ANSI B31.1, ULC C203 and MSS SP 58.

.2 Use components for intended design purpose only. Do not use for rigging or erection purposes.

.3 Set inserts in position in advance of concrete work.

.4 Support all equipment and piping from structural members. Where structural supports do not exist or inserts are not in suitable locations, suspend hangers from steel channels or angles. Provide supplementary structural members. Obtain approval before using expansion shields. Use minimum two shields for each hanger. **Do not suspend from metal deck.** Anchoring of piping and equipment shall be to manufacturers recommendations. Provide special supports for equipment where required, fabricated from welded steel structural members. Provide shop drawings and obtain their approval when requested.

.5 Use the smallest pipe size to determine spacing between pipe rack supports.

.6 Support plumbing piping in accordance with the more stringent requirements of authorities having jurisdiction, plumbing code, or as specified above.

.7 Place support within 300mm of each horizontal elbow and within 600mm of each side of valve or tee.

.8 On uninsulated copper piping, use copper hangers or 6mm lead crimped to hanger between copper and ferrous hanger.

.9 Provide insulation saddles for insulated pipe and prefabricated insulation shields with high density insulation.

.10 Offset hanger pipe and structural attachments in such a manner that rod is vertical when piping is hot and equalize loads on all hangers where possible.

2.2 PIPE HANGERS

.1 Finishes:
- .1 Ensure steel hangers in contact with copper piping are copper plated or epoxy coated.

.2 Upper attachment structural: suspension from lower flange of I-Beam:
- .1 Cold piping 50mm maximum: malleable iron C-clamp with hardened steel cup point setscrew, locknut.
- .2 Cold piping 65mm or greater, hot piping: malleable iron beam clamp, eye rod, jaws and extension with carbon steel retaining clip, tie rod, nuts and washer.

.3 Upper attachment structural: suspension from upper flange of I-Beam:
- .1 Cold piping 50mm maximum: ductile iron top-of-beam C-clamp with hardened steel cup point setscrew, locknut and carbon steel retaining clip.
- .2 Cold piping 65mm or greater, hot piping: malleable iron top-of-beam jaw-clamp with hooked rod, spring washer, plain washer and nut.

.4 Upper attachment to concrete:
- .1 Ceiling: carbon steel welded eye rod, clevis plate, clevis pin and cotters with weldless forged steel eye nut. Ensure eye 6 mm minimum greater than rod diameter.
- .2 Concrete inserts: wedge shaped body with knockout protector plate UL listed to MSS SP 69.

.5 Hanger rods: threaded rod material to MSS SP 58:
- .1 Ensure that hanger rods are subject to tensile loading only.
- .2 Provide linkages where lateral or axial movement of pipework is anticipated.

.6 Adjustable clevis: material to MSS SP 69 UL listed, clevis bolt with nipple spacer and vertical adjustment nuts above and below clevis.

.7 Yoke style pipe roll: carbon steel yoke, rod and nuts with cast iron roll, to MSS SP 69.

.8 U-bolts: carbon steel to MSS SP 69 with 2 nuts at each end to ASTM A 563.
- .1 Finishes for steel pipework: black or galvanized.
- .2 Finishes for copper, glass, brass or aluminum pipework: epoxy coated.

.9 Pipe rollers: cast iron roll and roll stand with carbon steel rod to MSS SP 69.

2.3 RISER CLAMPS

.1 Steel or cast iron pipe: galvanized or black carbon steel to MSS SP 58, type 42, UL listed.

.2 Copper pipe: carbon steel copper plated to MSS SP 58, type 42.

.3 Bolts: to ASTM A 307.

.4 Nuts: to ASTM A 563.

2.4 INSULATION PROTECTION SHIELDS

.1 Insulated domestic cold water piping:
- .1 64 kg/m³ density insulation plus insulation protection shield to: MSS SP 69, galvanized sheet carbon steel. Length designed for maximum 3 m span.

.2 Insulated domestic hot water piping:
- .1 Curved plate 300 mm long, with edges turned up, welded-in centre plate for pipe sizes NPS 12 and over, carbon steel to comply with MSS SP 69.

2.5 CONSTANT SUPPORT SPRING HANGERS

.1 Springs: alloy steel to ASTM A 125, shot peened, magnetic particle inspected, with +/-5% spring rate tolerance, tested for free height, spring rate, loaded height and provided with Certified Mill Test Report (CMTR).

.2 Load adjustability: 10 % minimum adjustability each side of calibrated load. Adjustment without special tools. Adjustments not to affect travel capabilities.

.3 Provide upper and lower factory set travel stops.

.4 Provide load adjustment scale for field adjustments.

.5 Total travel to be actual travel + 20%. Difference between total travel and actual travel 25 mm minimum.

.6 Individually calibrated scales on each side of support calibrated prior to shipment, complete with calibration record.

2.6 VARIABLE SUPPORT SPRING HANGERS

.1 Vertical movement: 13 mm minimum, 50 mm maximum, use single spring pre-compressed variable spring hangers.

.2 Vertical movement greater than 50 mm: use double spring pre-compressed variable spring hanger with 2 springs in series in single casing.

.3 Variable spring hanger complete with factory calibrated travel stops.

.4 Steel alloy springs: to ASTM A 125, shot peened, magnetic particle inspected, with +/-5 % spring rate tolerance, tested for free height, spring rate, loaded height and provided with CMTR.

2.7 EQUIPMENT SUPPORTS

.1 Fabricate equipment supports not provided by equipment manufacturer from structural grade steel meeting requirements of Section 05 12 00 - Structural Steel.

2.8 EQUIPMENT ANCHOR BOLTS AND TEMPLATES

.1 Provide templates to ensure accurate location of anchor bolts.

PART 3 EXECUTION

3.1 MANUFACTURER'S INSTRUCTIONS

.1 Compliance: comply with manufacturer's written recommendations or specifications, including product technical bulletins, handling, storage and installation instructions, and datasheet.

3.2 INSTALLATION

.1 Install in accordance with manufacturer’s recommendations.

.2 Clamps on riser piping:
- .1 Support independent of connected horizontal pipework using riser clamps and riser clamp lugs welded to riser.
- .2 Bolt-tightening torques to industry standards.
- .3 Steel pipes: install below coupling or shear lugs welded to pipe.
- .4 Cast iron pipes: install below joint.

.3 Clevis plates:
- .1 Attach to concrete with 4 minimum concrete inserts, one at each corner.

.4 Provide supplementary structural steelwork where structural bearings do not exist or where concrete inserts are not in correct locations.

.5 Use approved constant support type hangers where:
- .1 vertical movement of pipework is 13 mm or more,
- .2 transfer of load to adjacent hangers or connected equipment is not permitted.

.6 Use variable support spring hangers where:
- .1 transfer of load to adjacent piping or to connected equipment is not critical.
- .2 variation in supporting effect does not exceed 25 % of total load.

3.3 HANGER SPACING

.1 Support plumbing piping in accordance with the more stringent requirements of authorities having jurisdiction, plumbing code, or as specified above.

.2 Copper piping: up to 15mm: every 1.5 m.

.3 Flexible joint roll groove pipe: in accordance with table below, but not less than one hanger at joints.

.4 Within 300 mm of each elbow.

Maximum Pipe Size :	Maximum Spacing Steel	Maximum Spacing Copper
up to 32mm	2.1 m	1.8 m
40mm	2.7 m	2.4 m
50mm	3.0 m	2.7 m
65mm	3.6 m	3.0 m
80mm	3.6 m	3.0 m
95mm	3.9 m	3.3 m
100mm	4.2 m	3.6 m
150mm	5.1 m	
200mm	5.7 m	

3.4 HANGER INSTALLATION

.1 Install hanger so that rod is vertical under operating conditions.

.2 Adjust hangers to equalize load.

.3 Support from structural members. Where structural bearing does not exist or inserts are not in suitable locations, provide supplementary structural steel members.

3.5 HORIZONTAL MOVEMENT

.1 Angularity of rod hanger resulting from horizontal movement of pipework from cold to hot position not to exceed 4 degrees from vertical.

.2 Where horizontal pipe movement is less than 13 mm, offset pipe hanger and support so that rod hanger is vertical in the hot position.

3.6 FINAL ADJUSTMENT

.1 Adjust hangers and supports:
- .1 Ensure that rod is vertical under operating conditions.
- .2 Equalize loads.

.2 Adjustable clevis:
- .1 Tighten hanger load nut securely to ensure proper hanger performance.
- .2 Tighten upper nut after adjustment.

.3 C-clamps:
- .1 Follow manufacturer's recommended written instructions and torque values when tightening C-clamps to bottom flange of beam.

.4 Beam clamps:
- .1 Hammer jaw firmly against underside of beam.

END OF SECTION

PART 1 GENERAL

1.1 SUMMARY

.1 Section Includes:
- .1 Vibration isolation materials and components, seismic control measures and their installation.

1.2 REFERENCES

.1 National Fire Protection Association (NFPA)
- .1 NFPA 13, Standard for the Installation of Sprinkler Systems.

.2 National Building Code of Canada (NBC) - 2015

1.3 SUBMITTALS

.1 Submittals: in accordance with Section 01 33 00 - Submittal Procedures.
- .1 Submit manufacturer's printed product literature, specifications and datasheets. Include product characteristics, performance criteria, and limitations.

.2 Submit shop drawings in accordance with Section 01 33 00 - Submittal Procedures
- .1 Shop drawings: submit drawings stamped and signed by professional engineer licensed in the Province of Ontario.
- .2 Provide shop drawings for each system complete with performance and product data.
- .3 Provide detailed drawings of seismic control measures for equipment and piping.

.3 Quality assurance submittals: Submit certificates signed by manufacturer certifying that materials comply with specified performance characteristics and physical properties.

1.4 DELIVERY, STORAGE, AND HANDLING

- .1 Packing, shipping, handling and unloading:
- .2 Deliver, store and handle in accordance with Section 01 61 00 - Common Product Requirements.
- .3 Deliver, store and handle materials in accordance with manufacturer's written instructions.

PART 2 PRODUCTS

2.1 GENERAL

.1 Size and shape of bases type and performance of vibration isolation as indicated.

2.2 ELASTOMERIC PADS

.1 Type EP1 - neoprene waffle or ribbed; 9mm minimum thick; 50 durometer; maximum loading 350 kPa.

.2 Type EP2 - rubber waffle or ribbed; 9mm minimum thick; 30 durometer natural rubber; maximum loading 415 kPa.

.3 Type EP3 - neoprene-steel-neoprene; 9mm minimum thick neoprene bonded to 1.71mm steel plate; 50 durometer neoprene, waffle or ribbed; holes sleeved with isolation washers; maximum loading 350 kPa.

.4 Type EP4 - rubber-steel-rubber; 9mm minimum thick rubber bonded to 1.71mm steel plate; 30 durometer natural rubber, waffle or ribbed; holes sleeved with isolation washers; maximum loading 415 kPa.

2.3 ELASTOMERIC MOUNTS

.1 Type M1 - colour coded; neoprene in shear; maximum durometer of 60; threaded insert and two bolt-down holes; ribbed top and bottom surfaces.

2.4 SPRINGS

.1 Design stable springs: ratio of lateral to axial stiffness is equal to or greater than 1.2 times ratio of static deflection to working height. Select for 50% travel beyond rated load. Units complete with levelling devices.

.2 Ratio of height when loaded to diameter of spring between 0.8 to 1.0.

.3 Colour code springs.

2.5 SPRING MOUNT

.1 Zinc or cadmium plated hardware; housings coated with rust resistant paint.

.2 Type M2 - stable open spring: support on bonded 6mm minimum thick ribbed neoprene or rubber friction and acoustic pad.

.3 Type M3 - stable open spring: 6mm minimum thick ribbed neoprene or rubber friction and acoustic pad, bonded under isolator and on isolator top plate; levelling bolt for rigidly mounting to equipment.

.4 Type M4 - restrained stable open spring: supported on bonded 6mm minimum thick ribbed neoprene or rubber friction and acoustic pad; built-in resilient limit stops, removable spacer plates.

.5 Type M5 - enclosed spring mounts with snubbers for isolation up to 950 kg maximum.

2.6 HANGERS

.1 Colour coded springs, rust resistant, painted box type hangers. Arrange to permit hanger box or rod to move through a 30 degrees arc without metal to metal contact.

.2 Type H1 - neoprene - in-shear, moulded with rod isolation bushing which passes through hanger box.

.3 Type H2 - stable spring, elastomeric washer, cup with moulded isolation bushing which passes through hanger box.

.4 Type H3 - stable spring, elastomeric element, cup with moulded isolation bushing which passes through hanger box.

2.7 ACOUSTIC BARRIERS FOR ANCHORS AND GUIDES

.1 Acoustic barriers: between pipe and support, consisting of 25 mm minimum thick heavy duty duck and neoprene isolation material.

2.8 HORIZONTAL THRUST RESTRAINT

.1 Spring and elastomeric element housed in box frame; assembly complete with rods and angle brackets for equipment and ductwork attachment; provision for adjustment to limit maximum start and stop movement to 9 mm.

.2 Arrange restraints symmetrically on either side of unit and attach at centerline of thrust.

2.9 STRUCTURAL BASES

.1 Type B1 - Prefabricated steel base: integrally welded on sizes up to 2400 mm on smallest dimension, split for field welding on sizes over 2400 mm on smallest dimension and reinforced for alignment of drive and driven equipment; without supplementary hold down devices; complete with isolation element attached to base brackets arranged to minimize height; pre-drilled holes to receive equipment anchor bolts; and complete with adjustable built-in motor slide rail where indicated.

.2 Type B2 - Steel rail base: structural steel, positioned for alignment of drive and driven equipment; without supplementary hold down devices; complete with isolation element attached to base brackets arranged to minimize height; and pre-drilled holes to receive equipment anchor bolts.

.3 Bases to clear housekeeping pads by 50 mm minimum.

PART 3 EXECUTION

3.1 MANUFACTURER'S INSTRUCTIONS

.1 Compliance: comply with manufacturer's written recommendations or specifications, including product technical bulletins, handling, storage and installation instructions, and datasheet.

3.2 INSTALLATION

.1 Install vibration isolation equipment in accordance with manufacturer’s instructions and adjust mountings to level equipment.

.2 Ensure piping, ducting and electrical connections to isolated equipment do not reduce system flexibility and that piping, conduit and ducting passage through walls and floors do not transmit vibrations.

.3 Unless indicated otherwise, support piping connected to isolated equipment with spring mounts or spring hangers with 25 mm minimum static deflection as follows:
- .1 Up to NPS4: first 3 points of support. NPS5 to NPS8: first 4 points of support. NPS10 and Over: first 6 points of support.
- .2 First point of support: static deflection of twice deflection of isolated equipment, but not more than 50 mm.

.4 Where isolation is bolted to floor use vibration isolation rubber washers.

.5 Block and shim level bases so that ductwork and piping connections can be made to rigid system at operating level, before isolator adjustment is made. Ensure that there is no physical contact between isolated equipment and building structure.

3.3 FIELD QUALITY CONTROL

.1 Manufacturer's Field Services:

.1 Arrange with manufacturer's representative to review work of this Section and submit written reports to verify compliance with Contract Documents.

.2 Manufacturer's Field Services: consisting of product use recommendations and periodic site visits to review installation, scheduled as follows:

.1 After delivery and storage of Products.

.2 After preparatory work is complete but before installation commences.

.3 Upon completion of installation.

.3 Submit manufacturer's reports to Consultant within 7 days of manufacturer representative's review.

.4 Make adjustments and corrections in accordance with written report.

.2 Inspection and Certification:

.1 Experienced and competent sound and vibration testing professional engineer to take vibration measurement for HVAC systems after start up and TAB of systems to Section 23 05 93 - Testing, Adjusting and Balancing for HVAC.

3.4 CLEANING

.1 Proceed in accordance with Section 01 74 11 - Cleaning.

.2 Upon completion and verification of performance of installation, remove surplus materials, excess materials, rubbish, tools and equipment.

END OF SECTION

PART 1 GENERAL

1.1 SUMMARY

.1 Section Includes:
- .1 Materials and requirements for the identification of piping systems, duct work, valves and controllers, including the installation and location of identification systems.

1.2 REFERENCES

.1 Conform to relevant CAN/CGSB requirements.

1.3 SUBMITTALS

.1 Product Data:

.2 Submittals: in accordance with Section 01 33 00 - Submittal Procedures.

.3 Product data to include paint colour chips, other products specified in this section.

.4 Samples:
- .1 Submit samples in accordance with Section 01 33 00 - Submittal Procedures.
- .2 Samples to include nameplates, labels, tags, lists of proposed legends.

1.4 DELIVERY, STORAGE, AND HANDLING

.1 Packing, shipping, handling and unloading:
- .1 Deliver, store and handle in accordance with Section 01 61 00 - Common Product Requirements.
- .2 Deliver, store and handle materials in accordance with manufacturer's written instructions.

PART 2 PRODUCTS

2.1 MANUFACTURER'S EQUIPMENT NAMEPLATES

.1 Equipment Identification
- .1 Manufacturer's Nameplates:
  - .1 Provide on each piece of equipment a metal nameplate, mechanically fastened with raised or recessed letters.
  - .2 Include registration plates (e.g. pressure vessel, UL and ASME approval), as required by respective agency and as specified. Indicate size, equipment model, manufacturer's name, serial number, voltage, cycle, phase, and power of motors, all factory supplied.
  - .3 Locate nameplates so that they are easily read. Do not insulate or paint over plates.

2.2 SYSTEM NAMEPLATES

.1 System Nameplates:
  - .1 Provide laminated plastic plates with black face and white centre of minimum size 80mm x 40mm x 1.6mm nominal thickness, engraved with 6mm high lettering. Use 25mm high lettering for major equipment.

.2 Fasten nameplates securely in conspicuous place. Where nameplates must be mounted on a hot surface, provide standoffs.
.3 Identify equipment type and number (e.g. Volume Box VB-3) and service or areas or zone of building served (e.g. Room L147).
.4 Submit list of system nameplates to Consultant for review prior to engraving.
.5 Colours:
.1 Hazardous: red letters, white background.
.2 Elsewhere: black letters, white background (except where required otherwise by applicable codes).
.6 Sizes: Conform to following table:

Size # mm	Sizes (mm)	No. of Lines	Height of Letters (mm)
1	10 x 50	1	3
2	13 x 75	1	5
3	13 x 75	2	3
4	20 x 100	1	8
5	20 x 100	2	5
6	20 x 200	1	8
7	25 x 125	1	12
8	25 x 125	2	8
9	35 x 200	1	20

.2 Use maximum of 25 letters/numbers per line.

.2 Locations:
.1 Terminal cabinets, control panels: use size # 5.
.2 Equipment in Mechanical Rooms: use size # 9.

2.3 IDENTIFICATION OF PIPING SYSTEMS

.1 Identify contents by background colour marking, pictogram (as necessary), legend; direction of flow by arrows. To CAN/CGSB 24.3 except where specified otherwise.

.2 Do colour coding for piping identification to ANSI Standard A13.1, and local standards.

.3 Identify piping with colour coded bands only, unless painting of piping with primary colour is noted below.

.4 Identify medium in piping with markers showing name and service including temperature and pressure and directional flow arrows where relevant.

.5 Apply primary colour bands in exposed areas only, on finished piping surfaces, including secondary colour bands to indicated type and degree of hazard.

.6 Manufactured Pipe Markers and Colour Bands:
.1 Provide plastic coated cloth material with protective overcoating and waterproof contact adhesive undercoating, suitable for continuous operating temperature of 150°C and intermittent temperature of 205°C. Apply to prepared surfaces.
.2 Apply 50mm wide tape single wrap around pipe or pipe covering with ends overlapping one pipe diameter but not less than 1” for colour bands.
.3 Use block capital letters 50mm high for pipes of 80mm nominal and larger O.D. (including insulation) and not less than 20mm high for smaller diameters. Use black lettering on yellow and orange primary colour background and white lettering for all other background colours.
.4 Use direction arrows 150mm long by 50mm wide for piping of 80mm nominal or larger O.D.

including insulation and 100mm long by 20mm wide for smaller diameters. Use double headed arrows where direction of flow is reversible.

.5 Use waterproof and heat resistant plastic marker tags for pipes and heat resistant plastic marker tags for pipes and tubing of 20mm nominal and smaller O.D.

.6 In general, use black pipe marker direction arrows. Use white on red background for fire protection pipe markers.

.7 Standard of Acceptance:

.1 W.H. Brady identification tapes, bands, markers; Seton Name Plate Corporation, Setmark pipe markers.

.7 Location of identification:

.1 Locate markers and classifying colour bands on piping systems so they can be seen from floor or platform.

.2 Identify piping runs at least once in each room.

.3 Do not exceed 9m between identifications in open areas

.4 Identify both sides where piping passes through walls, partitions and floors.

.5 Where piping is concealed in a pipe chase or other confined space, identify at point of entry and leaving, and at each access opening.

.6 Identify piping at major manual and automatic valves immediately upstream of valves. Where this is not possible, place identification as close to the valve as possible.

.7 Identify branch, equipment or building served after such valve.

.8 Legend:

.1 Block capitals to sizes and colours listed in CAN/CGSB 24.3.

.9 Arrows showing direction of flow:

.1 Outside diameter of pipe or insulation less than 75 mm: 100 mm long x 50 mm high.

.2 Outside diameter of pipe or insulation 75 mm and greater: 150 mm long x 50 mm high.

.3 Use double-headed arrows where flow is reversible.

.10 Extent of background colour marking:

.1 To full circumference of pipe or insulation.

.2 Length to accommodate pictogram, full length of legend and arrows.

.11 Submit legends with colour classifications to Consultant for review before ordering material where colours differ from following table:

.1 Pipe and Valve Identification

Background colour:	Legend, arrows:
Yellow	BLACK
Green	WHITE
Red	WHITE

.2 Background colour marking and legends for piping systems:

Pipe Marker Legend	Valve Tag Legend	Primary Colour	Secondary Colour
Dom. Cold Water	Dom. Cold Water	Green	None
Dom. Hot Water Supply	Dom. Hot Water Supply	Green	None
Dom. Hot Water Recirc.	Dom. Hot Water Recirc.	Green	None
San. Sewer	San. Sewer	Green	None
Vent	Vent	Yellow	Black
Storm Sewer	St. Sewer	Green	None

2.4 IDENTIFICATION DUCTWORK SYSTEMS

.1 Ductwork Identification
- .1 Use 50mm high black stenciled letters with directional flow arrow
- .2 Identification to be as per the HVAC drawings as follows:
  - .1 Fresh Air
  - .2 Exhaust Air
  - .3 Supply Air
  - .4 Return Air
- .3 Do not exceed 9m maximum distance between markings.
- .4 Identify ducts each side of dividing walls or partitions and beside each access door.
- .5 Stencil over final finish only.

2.5 VALVES, CONTROLLERS

.1 Valves and Controllers Identification
- .1 Provide brass tags with 15mm stamped code lettering and numbers filled with black paint. Secure with non-ferrous chains or "S" hooks. Use for all valves and operating controllers.
- .2 Provide Consultant with six identification flow diagrams of approved size for each system. Include tag schedule, designating number, service, function, and location of each tagged item, and normal operating position of valves.
- .3 Mount, where directed, one copy of flow diagram and schedule mounted in glazed frame. Provide one copy in each maintenance instruction manual.
- .4 Consecutively number valves in systems.
- .5 Coordinate between the various mechanical sections to prevent overlapping of numbering systems.

2.6 CONTROLS COMPONENTS IDENTIFICATION

.1 Identify all systems, equipment, components, controls, sensors with system nameplates specified in this section.

.2 Inscriptions to include function and (where appropriate) fail-safe position.

2.7 LANGUAGE

.1 Identification in English.

PART 3 EXECUTION

3.1 MANUFACTURER'S INSTRUCTIONS

.1 Compliance: comply with manufacturer's written recommendations or specifications, including product technical bulletins, handling, storage and installation instructions, and datasheet.

3.2 TIMING

.1 Provide identification only after painting specified Section 09 91 23 - Painting has been completed.

3.3 INSTALLATION

.1 Perform work in accordance with CAN/CGSB-24.3 except as specified otherwise.

.2 Provide ULC and or CSA registration plates as required by respective agency.

3.4 NAMEPLATES

.1 Locations:
  .1 In conspicuous location to facilitate easy reading and identification from operating floor.

.2 Standoffs:
  .1 Provide for nameplates on hot and/or insulated surfaces.

.3 Protection:
  .1 Do not paint, insulate or cover.

3.5 LOCATION OF IDENTIFICATION ON PIPING AND DUCTWORK SYSTEMS

.1 On long straight runs in open areas in boiler rooms, equipment rooms, galleries, tunnels: at not more than 30 ft intervals and more frequently if required to ensure that at least one is visible from any one viewpoint in operating areas and walking aisles.

.2 Adjacent to each change in direction.

.3 At least once in each small room through which piping or ductwork passes.

.4 On both sides of visual obstruction or where run is difficult to follow.

.5 On both sides of separations such as walls, floors, partitions.

.6 Where system is installed in pipe chases, ceiling spaces, galleries, confined spaces, at entry and exit points, and at access openings.

.7 At beginning and end points of each run and at each piece of equipment in run.

.8 At point immediately upstream of major manually operated or automatically controlled valves, and dampers. Where this is not possible, place identification as close as possible, preferably on upstream side.

.9 Identification easily and accurately readable from usual operating areas and from access points.
  .1 Position of identification approximately at right angles to most convenient line of sight, considering operating positions, lighting conditions, risk of physical damage or injury and reduced visibility over time due to dust and dirt.

3.6 CLEANING

.1 Proceed in accordance with Section 01 74 11 - Cleaning.

.2 Upon completion and verification of performance of installation, remove surplus materials, excess materials, garbage, tools and equipment.

END OF SECTION

PART 1 GENERAL

1.1 SUMMARY

.1 TAB is used throughout this Section to describe the process, methods and requirements of testing, adjusting and balancing for HVAC.

.2 TAB means to test, adjust and balance to perform in accordance with requirements of Contract Documents and to do other work as specified in this section.

.3 TAB shall be completed for the following systems:
- .1 Packaged Rooftop Units and associated volume boxes, diffusers, grilles etc.
- .2 Air Handling Units
- .3 Makeup Air Units
- .4 Glycol Heating System, including boilers, air-handling unit coils, circuit balancing valves, control valves, pumps, accessories etc.
- .5 Laboratory Airflow Controls, including venturi valves, pressure controllers, fume hood controls and extraction arm systems
- .6 Laboratory Exhaust Systems
- .7 General Exhaust Systems

.4 Test, adjust and balance all equipment for a complete and operational system.

1.2 QUALIFICATIONS OF TAB PERSONNEL

.1 Testing and balancing personnel shall be experienced in balancing of mechanical systems in accordance with AABC procedures.

.2 Provide documentation confirming qualifications, successful experience.

.3 TAB: performed in accordance with the requirements of standard under which TAB Firm's qualifications are approved:
- .1 Associated Air Balance Council, AABC National Standards for Total System Balance, MN-1.
- .2 Sheet Metal and Air Conditioning Contractors' National Association (SMACNA), HVAC TAB HVAC Systems - Testing, Adjusting and Balancing.

.4 Recommendations and suggested practices contained in the TAB Standard: mandatory.

.5 Use TAB Standard provisions, including checklists, and report forms to satisfy Contract requirements.

.6 Use TAB Standard for TAB, including qualifications for TAB Firm and Specialist and calibration of TAB instruments.

.7 Where instrument manufacturer calibration recommendations are more stringent than those listed in TAB Standard, use manufacturer's recommendations.

.8 TAB Standard quality assurance provisions such as performance guarantees form part of this contract.
- .1 For systems or system components not covered in TAB Standard, use TAB procedures developed by TAB Specialist.
- .2 Where new procedures, and requirements, are applicable to Contract requirements have been published or adopted by body responsible for TAB Standard used (AABC, NEBB, or

TABB), requirements and recommendations contained in these procedures and requirements are mandatory.

1.3 PURPOSE OF TAB

.1 Test to verify proper and safe operation, determine actual point of performance, evaluate qualitative and quantitative performance of equipment, systems and controls at design, average and low loads using actual or simulated loads

.2 Adjust and regulate equipment and systems to meet specified performance requirements and to achieve specified interaction with other related systems under normal and emergency loads and operating conditions.

.3 Balance systems and equipment to regulate flow rates to match load requirements over full operating ranges.

1.4 EXCEPTIONS

.1 TAB of systems and equipment regulated by codes, standards to satisfaction of authority having jurisdiction.

1.5 CO-ORDINATION

.1 Schedule time required for TAB (including repairs, re-testing) into project construction and completion schedule to ensure completion before acceptance of project.

.2 Do TAB of each system independently and subsequently, where interlocked with other systems, in unison with those systems.

1.6 PRE-TAB REVIEW

.1 Review contract documents before project construction is started and adequacy of provisions for TAB and other aspects of design and installation pertinent to success of TAB.

.2 During construction, co-ordinate location and installation of TAB devices, equipment, accessories, measurement ports and fittings.

1.7 START-UP

.1 Follow start-up procedures as recommended by equipment manufacturer unless specified otherwise.

.2 Follow special start-up procedures specified elsewhere in Division 23.

1.8 OPERATION OF SYSTEMS DURING TAB

.1 Operate systems for length of time required for TAB and as required by Engineer for verification of TAB reports.

1.9 START OF TAB

.1 Notify Engineer 7 days prior to start of TAB.

.2 Start TAB when building is essentially completed, including:

.3 Installation of ceilings, doors, windows, other construction affecting TAB.

.4 Application of weatherstripping, sealing, and caulking.

.5 Pressure, leakage, other tests specified elsewhere Division 23.

.6 Provisions for TAB installed and operational.

.7 Start-up, verification for proper, normal and safe operation of mechanical and associated electrical and control systems affecting TAB including but not limited to:
- .1 Proper thermal overload protection in place for electrical equipment.
- .2 Air systems:
  - .1 Filters in place, clean.
  - .2 Duct systems clean.
  - .3 Ducts, air shafts, ceiling plenums are airtight to within specified tolerances.
  - .4 Correct fan rotation.
  - .5 Fire, smoke, volume control dampers installed and open.
  - .6 Coil fins combed, clean.
  - .7 Access doors, installed, closed.
  - .8 Outlets installed, volume control dampers open.
- .3 Hydronic Systems (Water and Glycol):
  - .1 Flushed, filled, vented.
  - .2 Correct pump rotation.
  - .3 Strainers in place, baskets clean.
  - .4 Isolating and balancing valves installed, open.
  - .5 Calibrated balancing valves installed, at factory settings.
  - .6 Chemical treatment systems complete, operational.

1.10 APPLICATION TOLERANCES

.1 Measure and adjust all HVAC (Outside Air, Exhaust air, Supply air, Return Air, Kitchen Exhaust, Laboratory Exhaust, etc.) systems to conform within 5% of specified requirements and arrange and pay for all changes to drive sheaves and belts to meet these requirements. Adjust individual outlets for desired air pattern. Carry out tests under maximum conditions, where practicable.

.2 Carry out complete adjustment of water flow rates associated with each part of the HVAC systems. This includes such systems as glycol hot water and domestic water recirculation. Record final flow rates in each case plus operating pressures and temperatures at full load conditions.

1.11 ACCURACY TOLERANCES

.1 Measured values accurate to within plus or minus 2 % of actual values.

1.12 INSTRUMENTS

.1 Calibrate in accordance with requirements of most stringent of referenced standard for either applicable system or HVAC system.

.2 Calibrate within 3 months of TAB.

1.13 SUBMITTALS

.1 Submit, prior to commencement of TAB:

.2 Proposed methodology and procedures for performing TAB if different from referenced standard.

1.14 PRELIMINARY TAB REPORT

.1 Submit for checking and approval of Engineer, prior to submission of formal TAB report, sample of rough TAB sheets. Include:
- .1 Details of instruments used.
- .2 Details of TAB procedures employed.
- .3 Calculations procedures.
- .4 Summaries.

1.15 TAB REPORT

.1 Properly record all final results, together with all pertinent data, such as temperatures, pressures, motor loads, alignment, belt condition, etc., for each piece of equipment. Deliver 4 copies to the Consultant. On approval, 2 copies will be returned for inclusion in the Maintenance Manuals.

.2 Follow SMACNA or AABC Standards.

.3 Include the following for all systems:
- .1 Installation data:
  - .1 Manufacturer and model size, discharge arrangement and class, motor type, HP, voltage, phase, cycles, full load amps, location, and local identification data.
  - .2 Data provided MUST be for the actual installed equipment. Manufacturer data for equipment specified as basis of design will be rejected, unless specified equipment is installed on site.
- .2 Design data:
  - .1 Total cfm, static pressure, motor HP, rpm, amps, outside air cfm, fan rpm, and fan bhp.
- .3 Fan data:
  - .1 cfm, static pressure, fan rpm, motor operating amps, motor bhp.
- .4 Complete air system schematic with design and actual cfm at each outlet or inlet. Show room numbers and floors.
- .5 Following acceptance of the report, permanently mark settings of all splitters, dampers and other adjustment devices so that adjustment can be restored if disturbed at any time.
- .6 Pump data:
  - .1 Pump manufacturer's data, motor kw, rated speed and head characteristics, actual performance characteristics including motor amperage and hydraulic head. Include observations with respect to any control difficulties and specific operating characteristics if different from those specified.
- .7 Balancing Data (Water Systems)
  - .1 Provide flow rate measurements for ALL circuit balancing valves, control valves, pressure bypass valves, pressure sensor settings and flow rates for each piece of mechanical equipment. TAB report MUST provide design flow rates for each fixture and also provide actual balancing valve setting and corresponding flow rates for every fixture. Data must be compiled in a table for easy comparison of design and actual results.
- .8 Any areas deemed unacceptable and/or do not meet design flow rates shall be adjusted by TAB contractor at no additional cost. Schedule walkthrough with Consultant once balancing is completed. Any additional deficiencies or discrepancies found during walkthrough must

be corrected by TAB contractor at no additional cost.

1.16 VERIFICATION

.1 Reported results subject to verification by Engineer.

.2 Provide personnel and instrumentation to verify up to 30% of reported results.

.3 Pay costs to repeat TAB as required to satisfaction Engineer.

1.17 SETTINGS

.1 After TAB is completed to satisfaction of Engineer, replace drive guards, close access doors, lock devices in set positions, ensure sensors are at required settings.

.2 Permanently mark settings to allow restoration at any time during life of facility. Do not eradicate or cover markings.

1.18 AIR SYSTEMS

.1 Do TAB of systems, equipment, components, controls specified Division 23.

.2 Measurements: to include as appropriate for systems, equipment, components, controls: air velocity, static pressure, flow rate, pressure drop (or loss), temperatures (dry bulb, wet bulb, dewpoint), duct cross-sectional area, RPM, electrical power, voltage, noise, vibration.

.3 Locations of equipment measurements: to include as appropriate:
- .1 Inlet and outlet of dampers, filter, coil, humidifier, fan, other equipment causing changes in conditions.
- .2 At controllers, controlled device.

.4 Locations of systems measurements to include as appropriate: main ducts, main branch, sub-branch, run-out (or grille, register or diffuser).

.5 Volume Boxes (minimum flow and maximum flow)

.6 Grille, register or diffuser reference number and manufacturer

.7 Grille, register or diffuser location

.8 Design air quantity

.9 Effective area factor and size

.10 Measured air quantity

.11 Static Pressure Setpoint (VAV Systems)

1.19 GLYCOL HEATING SYSTEMS

.1 Do TAB of systems, equipment, components, controls etc. for all hot water, chilled water and glycol systems.

.2 Measurements shall include, at a minimum, the following information:
- .1 Boilers:
  Manufacturer and type

Model and/or Serial number
Design water flow rate
Rated water pressure drop
Design water temperature in and out
Rated amperage and voltage (each compressor)
Rated heating capacity
Measured discharge water pressure
Measured inlet water pressure
Calculated water pressure drop
Measured water temperature in and out
Control Panel Indications
Outdoor air temperature (dry bulb)
Date and time measurements taken

.2 Pumps:
Manufacturer
Model and/or Serial number
Rated flow rate
Rated Head
Measured discharge pressure (full flow and no flow)
Measured suction pressure (full flow and no flow)
Measured L/s (gpm)
Operating Head
Operating rpm
Performance curve by manufacturer
Pressure Setpoint (Variable Speed Systems)

.3 Heat Transfer Elements (Air Handling Unit Coils)
Manufacturer and type
Design inlet and outlet temperatures (air and water side)
Design pressure drop (air and water side)
Measured inlet and outlet temperatures (air and water side)
Measured pressure drop (air and water side)
Measured flow rate (air and water side)
Control Valve Reading (pressure drop, control setting, flow rate)
Circuit Balancing Valves (Pressure drop, design flow rate, actual flow rate, balancing valve setting)

1.20 POST-OCCUPANCY TAB

.1 Participate in systems checks twice during Warranty Period - #1 approximately 3 months after acceptance and #2 within 1 month of termination of Warranty Period.

PART 2 PRODUCTS

2.1 FIRE DAMPERS

.1 Test all fire dampers as follows:
.1 Make the test by releasing the fusible link and witnessing closure of the damper. Reset upon completion. Leave all fire dampers in the open position. Make a set of white prints to show that each damper has been checked for closure, accessibility, and installation. Submit the prints to the Consultant.
.2 Do the balancing process strictly in accordance with the full intent and requirement of the ASHRAE Handbook - Testing, adjusting and balancing chapter.

PART 3 EXECUTION

3.1 NOT USED

.1 Not used.

END OF SECTION

PART 1 GENERAL

1.1 SUMMARY

.1 The intent is for all Ducts to be constructed, installed and sealed in accordance with Section 23 31 13.01 – Metal Ducts – Low Pressure to 500Pa. Providing the consultant is satisfied with the quality of the ductwork installation and sealing procedures, Section 23 05 94 – Pressure Testing Air Systems may be reduced. The consultant reserves the right to fully enforce the Section 23 05 94 – Pressure Testing of Air Systems at their discretion.

.2 Section Includes:
- .1 Materials and methods for pressure testing ducts over 5 m in length, forming part of a supply, return, outside or exhaust ductwork system directly or indirectly connected to air handling equipment.

1.2 RELATED SECTIONS

.1 Section 23 31 13.01 – Metal Ducts – Low Pressure to 500 Pa

1.3 REFERENCES

.1 Sheet Metal and Air Conditioning Contractor's National Association (SMACNA)
- .1 SMACNA HVAC Air Duct Leakage Test Manual.

.2 American Society of Heating, Refrigerating and Air-Conditioning Engineers, Inc. (ASHRAE).
- .1 ASHRAE Standard 90.1 Energy Standard for Buildings Except Low-Rise Residential Buildings

1.4 SUBMITTALS

.1 Make submittals in accordance with Section 01 33 00 - Submittal Procedures.

.2 Test Reports: submit certified test reports from approved independent testing laboratories indicating compliance with specifications for specified performance characteristics and physical properties. Include pressure test information and results as follows:
- .1 Submit proposed report form and test report format to Engineer for approval at least three months before proposed date of first series of tests. Do not start tests until approval received in writing from Engineer.
- .2 Prepare report of results and submit to Engineer within 24 hours of completion of tests. Include:
  - .1 Schematic of entire system.
  - .2 Schematic of section under test showing test site.
  - .3 Required and achieved static pressures.
  - .4 Orifice differential pressure at test sites.
  - .5 Permissible and actual leakage flow rate (L/s) for test sites.
  - .6 Witnessed certification of results.
- .3 Include test reports in final TAB report.
- .4 Certificates: submit certificates signed by manufacturer certifying that materials comply with specified performance characteristics and physical properties.
- .5 Instructions: submit manufacturer's installation instructions.
- .6 Manufacturer's field reports specified.

1.5 QUALITY ASSURANCE

.1 Pre-Installation Meetings:
- .1 Convene pre-installation meeting one week prior to beginning work of this Section.
  - .1 Verify project requirements.
  - .2 Review installation conditions.
  - .3 Co-ordination with other building subtrades.
  - .4 Review installation instructions and warranty requirements.

PART 2 PRODUCTS

2.1 TEST INSTRUMENTS

.1 Test apparatus to include:
- .1 Fan capable of producing required static pressure.
- .2 Duct section with calibrated orifice plate mounted and accurately located pressure taps.
- .3 Calibration curves for orifice plates used.

.2 Test apparatus: accurate to within +/- 2 % of flow rate and pressure.

.3 Submit details of test instruments to be used to Engineer at least three months before anticipated start date.

PART 3 EXECUTION

3.1 MANUFACTURER'S INSTRUCTIONS

.1 Compliance: comply with manufacturer's written recommendations or specifications, including product technical bulletins, handling, storage and installation instructions, and datasheet.

3.2 TEST PROCEDURES

.1 Test all exterior ductwork and representative sections of other pressure ducts totaling 25% of the total system. Sections shall be chosen by the Consultant.

.2 Test sections minimum of 5m long with inclusive of takeoffs, fittings, branch connections, and/or elbows.

.3 Maximum lengths of ducts to be tested consistent with capacity of test equipment.

.4 Repeat tests until specified pressures are attained. Bear costs for repairs and repetition to tests.

.5 Base partial system leakage calculations on SMACNA HVAC Air Duct Leakage Test Manual and ASHRAE 90.1 Standard requirements.

.6 Seal leaks that can be heard or felt, regardless of their contribution to total leakage.

3.3 SITE TOLERANCES

.1 System leakage tolerances for tested sections shall be calculated based on design duct pressure rating for Class A seals as defined in ASHRAE 90.1 and listed in cfm/100ft2 duct surface area.

.2 Testing shall be performed at design duct pressure.

.3 Leakage tests for all exterior ducts and ductwork designed to operate at static pressure in excess of 750 Pa shall not exceed calculated leakage rate.

.4 Leakage tests on following ducts shall not exceed calculated tolerances for Class A seal. This requirement, at the Consultants discretion, based on visual inspection of sealing procedures and workmanship, may be waived or reduced to the following:
- .1 Small duct systems up to 250 Pa: leakage 2%.
- .2 Large low pressure duct systems up to 500 Pa: leakage 2%.
- .3 High pressure duct systems, up to 2,500 Pa: leakage 2%

.5 Evaluation of test results to use surface area of duct and pressure in duct as basic parameters.

3.4 TESTING

.1 Test ducts before installation of insulation or other forms of concealment.

.2 Test after seals have cured.

.3 Test when ambient temperature will not affect effectiveness of seals, and gaskets.

3.5 CLEANING

.1 Upon completion and verification of performance of installation, remove surplus materials, excess materials, rubbish, tools and equipment.

END OF SECTION

1.1 SUMMARY

.1 Co-operate and co-ordinate with the requirements of other units of work specified in other sections.

.2 This section covers the insulation of the following:
- .1 Ducts & Plenums Exposed to Outside Air Temperatures
- .2 Supply Air Ductwork
- .3 Return/Exhaust Air Ductwork
- .4 Acoustic Duct Liner (Supplied and Installed by Division 23)

1.2 RELATED SECTIONS

.1 Section 01 33 00 - Submittal Procedures.

.2 Section 01 74 19 - Construction/Demolition Waste Management And Disposal.

.3 Section 23 05 29 - Hangers and Supports for HVAC Piping and Equipment.

.4 Section 23 31 13.01 – Metal Ducts – Low Pressure to 500 PA.

1.3 REFERENCES

.1 American Society of Heating, Refrigeration and Air Conditioning Engineers (ASHRAE)
- .1 ASHRAE 90.1, SI; Energy Standard for Buildings Except Low-Rise Residential Buildings.

.2 American Society for Testing and Materials International, (ASTM)
- .1 ASTM B 209M, Specification for Aluminum and Aluminum Alloy Sheet and Plate (Metric).
- .2 ASTM C 335, Test Method for Steady State Heat Transfer Properties of Horizontal Pipe Insulation.
- .3 ASTM C 411, Test Method for Hot-Surface Performance of High-Temperature Thermal Insulation.
- .4 ASTM C 449/C 449M, Standard Specification for Mineral Fiber-Hydraulic-Setting Thermal Insulating and Finishing Cement.
- .5 ASTM C 547, Specification for Mineral Fiber Pipe Insulation.
- .6 ASTM C 553, Specification for Mineral Fiber Blanket Thermal Insulation for Commercial and Industrial Applications.
- .7 ASTM C 612, Specification for Mineral Fiber Block and Board Thermal Insulation.
- .8 ASTM C 795, Specification for Thermal Insulation for Use with Austenitic Stainless Steel.
- .9 ASTM C 921, Standard Specification for Thermal Insulation for Use in Contact with Austenitic Stainless Steel.

.3 Canadian General Standards Board (CGSB)
- .1 CGSB 51-GP-52Ma, Vapour Barrier, Jacket and Facing Material for Pipe, Duct and Equipment Thermal Insulation.

.4 Thermal Insulation Association of Canada (TIAC): National Insulation Standards.

.5 Underwriters Laboratories of Canada (ULC)
- .1 CAN/ULC-S102, Surface Burning Characteristics of Building Materials and Assemblies.
- .2 CAN/ULC-S701, Thermal Insulation Polyotrene, Boards and Pipe Covering.

1.4 DEFINITIONS

.1 For purposes of this section:
- .1 "CONCEALED" - insulated mechanical services and equipment in suspended ceilings and non-accessible chases and furred-in spaces.
- .2 "EXPOSED" - will mean "not concealed" as defined herein.
- .3 Insulation systems - insulation material, fasteners, jackets, and other accessories.

.2 TIAC Codes:
- .1 CRD: Code Round Ductwork,
- .2 CRF: Code Rectangular Finish.

1.5 SHOP DRAWINGS

.1 Submit shop drawings in accordance with Section 01 33 00 - Submittal Procedures.

.2 Submit product data for the following:
- .1 Jacket materials, noting application for each type
- .2 Ductwork Insulation Types, noting application for each product
- .3 Finishing cement
- .4 Lagging adhesive
- .5 Duct Coverings

.3 Submit for approval manufacturer's catalogue literature related to installation, fabrication for duct jointing recommendations.

1.6 SAMPLES

.1 Submit samples in accordance with Section 01 33 00 - Submittal Procedures.

.2 Submit for approval: complete assembly of each type of insulation system, insulation, coating, and adhesive proposed. Mount sample on 12 mm plywood board. Affix typewritten label beneath sample indicating service.

1.7 MANUFACTURERS' INSTRUCTIONS

.1 Submit manufacturer's installation instructions in accordance with Section 01 33 00 - Submittal Procedures.

.2 Installation instructions to include procedures used, and installation standards achieved.

1.8 QUALIFICATIONS

.1 Installer: specialist in performing work of this section, and have at least 3 years successful experience in this size and type of project.

1.9 DELIVERY, STORAGE AND HANDLING

.1 Deliver materials to site in original factory packaging, labelled with manufacturer's name, address.

.2 Protect from weather and construction traffic.

.3 Protect against damage from any source.

.4 Store at temperatures and conditions recommended by manufacturer.

PART 2 PRODUCTS

2.1 FIRE AND SMOKE RATING

.1 In accordance with CAN/ULC-S102:
- .1 Maximum flame spread rating: 25.
- .2 Maximum smoke developed rating: 50.

2.2 INSULATION

.1 Mineral fibre: as specified includes glass fibre, rock wool, slag wool.

.2 Thermal conductivity ("k" factor) not to exceed specified values at 24° C mean temperature when tested in accordance with ASTM C 335.

.3 Ductwork mounted external to the building envelope
- .1 50mm rigid glass mineral wool board faced on one side with foil-crim-kraft (FSK) vapour barrier and with lightweight black glass mat on the airstream side. Min R value of 8. Knauf Eclipse Air Duct Board
- .2 Provide external all weather, VentureClad Jacketing system – Aluminum Finish.

.4 Acoustic Duct Liner (Supplied and Installed by ductwork contractor):
- .1 Internal Surfaces (acoustic): 15mm flexible duct liner, fibre glass bonded with thermosetting resin and faced with a black coated mat on the airstream side. Manson Akousti-Liner.

.5 Ducts & Plenums Exposed to Outside Air Temperatures
- .1 Ductwork within the Building Envelope exposed to raw exterior air (ie. Outside Air intake/exhaust Ducts & Plenums until connection with equipment):
  - a) **Concealed**: For concealed locations, use Manson Alley Wrap B flexible blanket insulation complete with white polypropylene scrim-kraft (PSK) vapour barrier. Min R value of 8 (50mm @ 1.5 PCF)
  - b) **Exposed**: 50mm rigid glass fibre board faced on one side with a white all service jacket (ASJ) vapour barrier. Min R value of 8. Manson AK Board.
  - c) Refer to the equipment specific application table in section 2.3 for the insulation requirements.

.6 Supply and Return/Exhaust Air Ductwork Insulation:
- .1 Refer to the equipment specific application table in section 2.3 for the insulation requirements.
- .2 **Concealed** Ductwork: use Manson Alley Wrap B flexible blanket insulation complete with white polypropylene scrim-kraft (PSK) vapour barrier. Min R value of 3.5 (38mm @ 0.75 PCF)
- .3 **Exposed** Ductwork: use rigid glass fibre board faced on one side with a white all service jacket (ASJ) vapour barrier. Min R value of 3.5 (25mm @ 3.0 PCF). Manson AK Board.

2.3 INSULATION APPLICATION TABLE

AHU System	Room	Insulation			Remarks
		SA	RA	EA	
HVAC-1	* General	*yes	no	-	Insulate all supply ducts apart of system HVAC-1, except duct serving Support Room (111).
HVAC-1	Support Room (111)	no	no	-	
MAU-1	Apparatus Bay (101)	*yes	no	-	*Only exterior ductwork to be insulated before penetration into Apparatus Bay (101).
EF-1	Washrooms (123, 125, 127)	-	-	*yes	*Insulate the first 10ft. of exhaust duct starting from the connection to EF-1.

2.4 ACCESSORIES

.1 Vapour retarder lap adhesive:
  .1 Water based, fire retardant type, compatible with insulation.

.2 Indoor Vapour Retarder Finish:
  .1 Vinyl emulsion type acrylic, compatible with insulation.

.3 Insulating Cement: hydraulic setting on mineral wool, to ASTM C 449.

.4 ULC Listed Canvas Jacket:
  .1 220 gm/m² cotton, plain weave, treated with dilute fire retardant lagging adhesive to ASTM C 921.

.5 Outdoor Vapour Retarder Mastic:
  .1 Vinyl emulsion type acrylic, compatible with insulation.
  .2 Reinforcing fabric: Fibrous glass, untreated 305 g/m².

.6 Tape: self-adhesive, aluminum, reinforced, 50 mm wide minimum.

.7 Contact adhesive: quick-setting

.8 Canvas adhesive: washable.

.9 Banding: 12 mm wide, 0.5 mm thick stainless steel.

.10 Fasteners: 2 mm diameter pins with 35 mm diameter or square clips, length to suit thickness of insulation.

PART 3 EXECUTION

3.1 PRE-INSTALLATION REQUIREMENTS

.1 Pressure testing of ductwork systems complete, witnessed and certified.

.2 Surfaces clean, dry, free from foreign material.

3.2 INSTALLATION

.1 Install in accordance with TIAC National Standards.

.2 Apply materials in accordance with manufacturers instructions and as indicated.

.3 Use two layers with staggered joints when required nominal thickness exceeds 75 mm.

.4 Maintain uninterrupted continuity and integrity of vapour retarder jacket and finishes.
- .1 Hangers, supports to be outside vapour retarder jacket.

.5 Supports, Hangers in accordance with Section 23 05 29 - Hangers and Supports for HVAC Piping and Equipment.
- .1 Apply high compressive strength insulation where insulation may be compressed by weight of ductwork.

.6 Fasteners: At 300 mm on centre in horizontal and vertical directions, minimum two rows each side.

.7 Supply, Return and Exhaust Air Duct Insulation:
- .1 Preparation: Fix mechanical fasteners to both horizontal and vertical surfaces at approximately 300mm on centre, each way.
- .2 Application: Cut insulation with integral vapour barrier to required size and apply to exterior of duct or plenum with vapour barrier on the warm side with horizontal surfaces overlapping vertical surfaces. Butt edges together tightly. Secure insulation by impaling on mechanical fasteners. Where mechanical fasteners penetrate vapour barrier, and at all corners and joints, apply vapour barrier tape or vapour barrier strips adhered with vapour barrier adhesive. Where raised seams are encountered, secure to the seams an overlapping strip of flexible insulating material with integral vapour barrier to provide a continuous vapour barrier.

.8 Acoustic Duct Liner (Internal)
- .1 Preparation: Fix mechanical fasteners to both horizontal and vertical surfaces at approximately 300mm on centre each way.
- .2 Application: Cut insulation material to required size and apply to interior of duct or plenum with horizontal surfaces overlapping vertical surfaces and with edges tightly butted together. Secure insulation by impaling on mechanical fasteners. Where mechanical fasteners penetrate factory finish and at all joints, apply a seal coating. On high velocity duct systems apply reinforcing membrane over the entire insulation surface. Seal off leading edge of insulation to duct surface with reinforced seal coating. Apply acoustic lining to interior of all supply air ducts as indicated on Drawings.

3.3 DUCTWORK INSULATION SCHEDULE

.1 Install insulation in accordance with manufacturers recommended installation instructions.

END OF SECTION

PART 1 GENERAL

1.1 REFERENCES

.1 American Society for Testing and Materials International (ASTM)
- .1 ASTM E 202, Standard Test Methods for Analysis of Ethylene Glycols and Propylene Glycols.

1.2 CLEANING AND START-UP OF MECHANICAL PIPING SYSTEMS

.1 In accordance with Section 23 08 02 - Cleaning and Start-up of Mechanical Piping Systems.

1.3 HYDRONIC SYSTEMS - PERFORMANCE VERIFICATION (PV)

.1 Perform hydronic systems performance verification after cleaning is completed and system is in full operation.

.2 When systems are operational, perform following tests:
- .1 Conduct full scale tests at maximum design flow rates, temperatures and pressures for continuous consecutive period of 48 hours to demonstrate compliance with design criteria.
- .2 Verify performance of hydronic system circulating pumps as specified, recording system pressures, temperatures, fluctuations by simulating maximum design conditions and varying.
  - .1 Pump operation.
  - .2 Boiler and/or chiller operation.
  - .3 Pressure bypass open/closed.
  - .4 Control pressure failure.
  - .5 Maximum heating demand.
  - .6 Maximum cooling demand.
  - .7 Boiler and/or chiller failure.
  - .8 Fluid cooler fan failure.
  - .9 Outdoor reset. Re-check heat exchanger output supply temperature at 100% and 50% reset, maximum water temperature.

1.4 HYDRONIC SYSTEM CAPACITY TEST

.1 Perform hydronic system capacity tests after:
- .1 TAB has been completed
- .2 Verification of operating, limit, safety controls.
- .3 Verification of primary and secondary pump flow rates.
- .4 Verification of accuracy of temperature and pressure sensors and gauges.

.2 Calculate system capacity at test conditions.

.3 Using manufacturer's published data and calculated capacity at test conditions, extrapolate system capacity at design conditions.

.4 When capacity test is completed, return controls and equipment status to normal operating conditions.

.5 Submit sample of system water to approved testing agency to determine if chemical treatment is correct. Include cost.

.6 Heating system capacity test:
- .1 Perform capacity test when ambient temperature is within 10% of design conditions. Simulate design conditions by:
  - .1 Increasing OA flow rates through heating coils (in this case, monitor heating coil discharge temperatures to ensure that coils are not subjected to freezing conditions) or
  - .2 Reducing space temperature by turning of heating system for sufficient period of time before starting testing.
- .2 Test procedures:
  - .1 Open fully heat exchanger, heating coil and radiation control valves.
  - .2 With boilers on full firing and hot water heating supply temperature stabilized, record flow rates and supply and return temperatures simultaneously.
  - .3 Conduct flue gas analysis test on boilers at full load and at low fire conditions.

.7 Chilled water system capacity test:
- .1 Perform capacity test when ambient temperature is within 10% of design conditions. Simulate design conditions by:
  - .1 Adding heat from building heating system or;
  - .2 Raising space temperature by turning off cooling and air systems for sufficient period of time before starting testing and pre-heating building to summer design space temperature (occupied) or above. Set OAD and RAD for minimum outside air if OAT is near outside design temperature or to maximum recirculation if RAT is greater that OAT. RAT to be at least 23 degrees C minimum.
- .2 Test procedures:
  - .1 Open fully cooling coil control valves.
  - .2 Set thermostats on associated AHU's for maximum cooling.
  - .3 Set AHU's for design maximum air flow rates.
  - .4 Set load or demand limiters on chillers to 100%.
  - .5 After system has stabilized, record chilled water, and condenser water flow rates and supply and return temperatures simultaneously.

1.5 HYDRONIC SYSTEMS

.1 In addition to procedures specified above, perform following:
- .1 Add chemicals once per week as required.
- .2 Perform TAB as specified Section 23 05 93 - Testing, Adjusting and Balancing for HVAC.
- .3 Set up and adjust drip feeders, timer controls, pump strokes as required to maintain required chemical feed rates.

1.6 GLYCOL SYSTEMS

.1 Test to prove concentration inhibitor strength and include in procedural report. Refer to ASTM E 202.

1.7 GASEOUS FUEL SYSTEMS

.1 Operation tests:
- .1 Measure gas pressure at gas meter outlet and at burner manifold.
- .2 Verify details of temperature and pressure compensation at meter.
- .3 Verify settings, operation, venting of high and low pressure cut-outs, alarms.
- .4 Check terminals of vents for gas pressure regulators.

1.8 POTABLE WATER SYSTEMS

.1 When cleaning is completed and system filled:

.1 Verify performance of equipment and systems as specified elsewhere in Division 23.
.2 Check for proper operation of water hammer arrestors. Run one outlet for 10 seconds, then shut of water immediately. If water hammer occurs, replace water hammer arrestor or recharge air chambers. Repeat for each outlet and flush valve.
.3 Confirm water quality consistent with supply standards, verifying that no residuals remain resulting from flushing and/or cleaning.
.4 Ensure that domestic hot water recirculation system is operational.

1.9 WET AND DRY PIPE SPRINKLER SYSTEM

.1 Cleaning, testing, start-up, performance verification of equipment, systems, components, and devices is specified elsewhere in Division 23.

.2 Verification of controls, detection devices, alarm devices is specified Division 26.

.3 Verify operation of interlocks between HVAC systems and fire alarm systems.

1.10 SANITARY AND STORM DRAINAGE SYSTEMS

.1 Buried systems: perform tests prior to back-filling. Perform hydraulic tests to verify grades and freedom from obstructions.

.2 Ensure that traps are fully and permanently primed.

.3 Ensure that fixtures are properly anchored, connected to system.

.4 Operate flush valves, tank and operate each fixture to verify drainage and no leakage.

.5 Cleanouts: refer to Section 22 42 00 - Plumbing Fixtures.

.6 Roof drains:
.1 Refer to Section 22 42 00 - Plumbing Fixtures.
.2 Remove caps as required.

PART 2 PRODUCTS

2.1 NOT USED

.1 Not Used.

PART 3 EXECUTION

3.1 NOT USED

.1 Not Used.

END OF SECTION

PART 1 - GENERAL

1.1 SUMMARY

.1 Section Includes:
  .1 Procedures and cleaning solutions for cleaning mechanical piping systems.

1.2 REFERENCES

.1 American Society for Testing and Materials International (ASTM)
  .1 ASTM E 202-[00], Standard Test Methods for Analysis of Ethylene Glycols and Propylene Glycols.

PART 2 - PRODUCTS

2.1 CLEANING SOLUTIONS

.1 Accomplish alkaline cleaning by circulating a compound of Tri-sodium polyphosphate, Meta-silicate, Sodium Nitrate, and a wetting agent (Pace's Expel L-49 or equivalent). Use concentration to the manufacturer's recommendations.

PART 3 - EXECUTION

3.1 MANUFACTURER'S INSTRUCTIONS

.1 Compliance: comply with manufacturer's written recommendations or specifications, including product technical bulletins, handling, storage and installation instructions, and datasheet.

3.2 CLEANING HYDRONIC SYSTEMS

.1 Timing: systems operational, hydrostatically tested and with safety devices functional, before cleaning is carried out.

.2 Cleaning Agency:
  .1 Retain qualified water treatment specialist to perform system cleaning.

.3 Install instrumentation such as flow meters, orifice plates, pitot tubes, flow metering valves only after cleaning is certified as complete.

.4 Provide chemical cleaning for each of the following systems. Optionally, provide full clean water flush to Owner’s satisfaction.
  .1 -Glycol heating systems
  .2 -refrigerant piping system

.5 Provide necessary materials, plant, labour, electricity, heat, water, and all required connections to systems to complete the chemical cleaning.

.6 Notify consultant 48 hours prior to chemical cleaning so that work may be verified and inspected.

.7 Clean each system of all construction debris, oils, grease, varnish, and millscale.

.8 Flush each system until the issuing water is free of sediment.

.9 Accomplish alkaline cleaning by circulating a compound of Tri-sodium polyphosphate, Meta-silicate, Sodium Nitrate, and a wetting agent (Pace's Expel L-49 or equivalent). Use concentration to the manufacturer's recommendations.

.10 It is preferred that the solution circulate for 8 hours at a temperature between 180°F and 200°F. If the solution is used at 70°F, circulate the solution for 24 hours.

.11 Drain and rinse the complete system with clear water until the discharge water shows the same pH and total dissolved solids as that of the raw water entering the system.

.12 If required for removal of iron oxide deposits, acid cleaning shall be accomplished by a compound of inhibited sulfuric acid and synthetic detergent solution (Pace's Scale Sol WT-29 or equivalent) through the system.

.13 Ensure that any chemicals harmful to plastic do not contact plastic piping.

.14 Acceptable Firms: Pace Chemicals, Dearborn Chemical.

.15 Conditions at time of cleaning of systems:
- .1 Systems: free from construction debris, dirt and other foreign material.
- .2 Control valves: operational, fully open to ensure that terminal units can be cleaned properly.
- .3 Strainers: clean prior to initial fill.
- .4 Install temporary filters on pumps not equipped with permanent filters.
- .5 Install pressure gauges on strainers to detect plugging.

.16 Report on Completion of Cleaning:
- .1 When cleaning is completed, submit report, complete with certificate of compliance with specifications of cleaning component supplier.

.17 Hydronic Systems:
- .1 Fill system with water, ensure air is vented from system.
- .2 Use water metre to record volume of water in system to +/- 0.5%.
- .3 Add chemicals under direct supervision of chemical treatment supplier.
- .4 Closed loop systems: circulate system cleaner at 60 degrees C for at least 36 h. Drain as quickly as possible. Refill with water and inhibitors. Test concentrations and adjust to recommended levels.
- .5 Flush velocity in system mains and branches to ensure removal of debris. System pumps may be used for circulating cleaning solution provided that velocities are adequate.
- .6 Add chemical solution to system.

.18 Glycol Systems:
- .1 In addition to procedures specified above perform specified procedures.
- .2 Test to prove concentration inhibitor strength and include in procedural report. Refer to ASTM E 202.

3.3 START-UP OF HYDRONIC SYSTEMS

.1 After cleaning is completed and system is filled:
- .1 Establish circulation and expansion tank level, set pressure controls.
- .2 Ensure air is removed.
- .3 Check pumps to be free from air, debris, possibility of cavitation when system is at design temperature.
- .4 Dismantle system pumps used for cleaning, inspect, replace worn parts, install new gaskets

and new set of seals.

.5 Clean out strainers repeatedly until system is clean.

.6 Check water level in expansion tank with cold water with circulating pumps OFF and again with pumps ON.

.7 Repeat with water at design temperature.

.8 Check pressurization to ensure proper operation and to prevent water hammer, flashing, cavitation. Eliminate water hammer and other noises.

.9 Bring system up to design temperature and pressure slowly.

.10 Perform TAB as specified in Section 23 05 93 - Testing, Adjusting and Balancing for HVAC.

.11 Adjust pipe supports, hangers, springs as necessary.

.12 Monitor pipe movement, performance of expansion joints, loops, guides, anchors.

.13 Re-tighten bolts using torque wrench, to compensate for heat-caused relaxation. Repeat several times during commissioning.

.14 Check operation of drain valves.

.15 Adjust valve stem packings as systems settle down.

.16 Fully open balancing valves (except those that are factory-set).

.17 Check operation of over-temperature protection devices on circulating pumps.

.18 Adjust alignment of piping at pumps to ensure flexibility, adequacy of pipe movement, absence of noise or vibration transmission.

3.4 CLEANING

.1 Proceed in accordance with Section 01 74 11 - Cleaning

.2 Upon completion and verification of performance of installation, remove surplus materials, excess materials, rubbish, tools and equipment.

END OF SECTION

PART 1 GENERAL

1.1 SUMMARY

.1 Section Includes:
- .1 Materials and installation for piping, valves and fittings for gas fired equipment.

1.2 RELATED REQUIREMENTS

.1 Section 22 05 01 – Common Work Results for Mechanical

.2 Section 23 05 05 – Installation of Pipework

.3 Section 23 05 23 – Valves

.4 Section 23 05 93 – Performance Verification of Mechanical Piping

.5 Section 23 08 02 - Cleaning and Start-up of Mechanical Piping Systems

1.3 REFERENCES

.1 Conform to latest version of CSA B149.1 for supply and installation of natural gas systems.

1.4 SUBMITTALS

.1 Submittals in accordance with Section 01 33 00 - Submittal Procedures.

.2 Product Data:
- .1 Submit manufacturer's printed product literature, specifications and datasheet for piping, fittings and equipment.
- .2 Indicate on manufacturers catalogue literature following:
  - .1 valves.
  - .2 pipe

.3 Test Reports: submit certified test reports from approved independent testing laboratories indicating compliance with specifications for specified performance characteristics and physical properties.

.4 Certificates: submit certificates signed by manufacturer certifying that materials comply with specified performance characteristics and physical properties.

.5 Instructions: submit manufacturer's installation instructions.

1.5 DELIVERY, STORAGE AND HANDLING

.1 Deliver, store and handle materials in accordance with Section 01 61 00 - Common Product Requirements and with manufacturer's written instructions.

.2 Black steel pipe shall be shipped to the jobsite in such a manner to protect the pipe. The pipe and fittings shall not be roughly handled during shipment. Pipe and fittings shall be unloaded with reasonable care.

.3 Protect the stored product from moisture and dirt. Elevate above grade. When stored inside, do not exceed the structural capacity of the floor.

.4 Protect fittings and piping specialties from moisture and dirt.

PART 2 PRODUCTS

2.1 QUALITY CONTROL

.1 Fittings shall be listed & approved for their intended application.

.2 All fittings used in Fuel Gas Applications shall be listed by a third party agency as being acceptable for fuel gas piping systems.

2.2 PIPE

.1 Steel pipe: to ASTM A 53/A 53M, Schedule 40, seamless as follows:
- .1 NPS 1/2 to 2, screwed.
- .2 NPS ½ to 2, plain end (Viega Mega Press)
- .3 NPS2 1/2 and over, plain end.

2.3 JOINTING MATERIAL

.1 Screwed fittings: pulverized lead paste.

.2 Welded fittings: to CSA W47.1.

.3 Flange gaskets: nonmetallic flat.

.4 Cold Press Mechanical Joint Fitting shall conform to material requirements of ASTM A420 or ASME B16.3 and performance criteria of ANSI/CSA LC4. Sealing elements for press fittings shall be EPDM. Sealing elements shall be factory installed or an alternative supplied by fitting manufacturer. Press ends shall have Smart Connect® feature design (leakage path). MegaPress fittings with the Smart Connect feature assure leakage of liquids and/or gases from inside the system past the sealing element of an unpressed connection. The function of this feature is to provide the installer quick and easy identification of connections which have not been pressed prior to putting the system into operation

2.4 FITTINGS

.1 Steel pipe fittings, screwed, flanged or welded:
- .1 Malleable iron: screwed, banded, Class 150.
- .2 Steel pipe flanges and flanged fittings: to ASME B16.5.
- .3 Welding: butt-welding fittings.
- .4 Unions: malleable iron, brass to iron, ground seat, to ASTM A 47/A 47M.
- .5 Bolts and nuts: to ASME B18.2.1.
- .6 Nipples: schedule 40, to ASTM A 53/A 53M.

.2 Cold Press Mechanical Joint Fitting (Megapress):
- .1 Cold Press Mechanical Joint Fitting shall conform to material requirements of ASTM A420 or ASME B16.3 and performance criteria of ANSI/CSA LC4. Sealing elements for press fittings shall be EPDM. Sealing elements shall be factory installed or an alternative supplied by fitting manufacturer. Press ends shall have Smart Connect® feature design (leakage path). MegaPress fittings with the Smart Connect feature assure leakage of liquids and/or gases from inside the system past the sealing element of an unpressed connection. The function of this feature is to provide the installer quick and easy identification of connections

which have not been pressed prior to putting the system into operation.

2.5 VALVES

.1 See Section 23 05 23 Valves.

PART 3 EXECUTION

3.1 MANUFACTURER'S INSTRUCTIONS

.1 Compliance: comply with manufacturer's written recommendations or specifications, including product technical bulletins, handling, storage and installation instructions, and datasheet.

.2 The installing contractor shall examine the pipe and fittings for defects, sand holes or cracks. There shall be no defects of the pipe or fittings. Any damaged pipe or fittings shall be rejected.

.3 The installing contractor shall insure that internal components of the cold press mechanical joint press fitting are properly in place and free from damage. This is to include sealing elements, grip ring & separator rings.

.4 Black steel pipe shall be cut with an approved pipe cutting tool. The pipe shall be cut square to permit proper joining with the fittings.

.5 Remove scale, slag, dirt and debris from inside and outside of pipe and fittings before assembly. The protective coating shall be removed from the outside of the pipe end and shall be wiped clean and dry. The burrs on the pipe shall be reamed with a de-burring or reaming tool.

3.2 PIPING

.1 Install in accordance with Section 23 05 01 - Installation of Pipework, applicable Provincial/Territorial Codes, CAN/CSA B149.1..

.2 Install drip points:
- .1 At low points in piping system.
- .2 At connections to equipment.

.3 Press Fittings: MegaPress Cold Press Mechanical Joint Fittings shall be installed in accordance with the manufacturer’s installation instructions. The protective corrosion coating shall be removed from the outside of the pipe end. The pipe shall be fully inserted into the fitting and the pipe marked at the shoulder of the fitting. The fitting alignment shall be checked against the mark on the pipe to assure the pipe is fully engaged (inserted) in the fitting. The joints shall be pressed using the tool(s) approved by the manufacturer.

3.3 VALVES

.1 Install valves with stems upright or horizontal.

.2 Install valves at branch take-offs to isolate pieces of equipment, and as indicated.

3.4 FIELD QUALITY CONTROL

.1 Site Tests/Inspection:
- .1 Test system in accordance with CAN/CSA B149.1 and requirements of authorities having

jurisdiction.

.2 See Section 23 05 05 – Installation of Pipework.

3.5 ADJUSTING

.1 Purging: purge after pressure test in accordance with CAN/CSA B149.1.

.2 Pre-Start-Up Inspections:

.1 Check vents from regulators, control valves, terminate outside building in approved location, protected against blockage, damage.

.2 Check gas trains, entire installation is approved by authority having jurisdiction.

3.6 CLEANING

.1 Cleaning: in accordance with Section 23 08 02- Cleaning and Start-Up of Mechanical Piping Systems, CAN/CSA B149.1, supplemented as specified.

.2 Upon completion and verification of performance of installation, remove surplus materials, excess materials, rubbish, tools and equipment.

PART 1 GENERAL

1.1 SUMMARY

.1 Section Includes:
- .1 Materials and installation of low-pressure metallic ductwork, joints and accessories.

1.2 RELATED SECTIONS

.1 Section 01 33 00 - Submittal Procedures.

.2 Section 01 74 19 - Waste Management and Disposal.

.3 Section 07 84 00 - Firestopping.

.4 Section 23 05 29 - Hangers and Supports for HVAC Piping and Equipment.

.5 Section 23 05 94 - Pressure Testing of Ducted Air Systems.

.6 Section 23 33 00 – Air Duct Accessories

1.3 REFERENCES

.1 American Society of Heating, Refrigerating and Air-Conditioning Engineers, Inc. (ASHRAE).

.2 Sheet Metal and Air Conditioning Contractors' National Association (SMACNA).
- .1 SMACNA HVAC Duct Construction Standards - Metal and Flexible, 2nd Edition [1995] and Addendum No. 1, [1997].
- .2 SMACNA HVAC Air Duct Leakage Test Manual, [1985], 1st Edition.

1.4 SUBMITTALS

.1 Submit shop drawings and product data in accordance with Section 01 33 00 - Submittal Procedures.

1.5 QUALITY ASSURANCE

.1 Certification of Ratings:
- .1 Catalogue or published ratings shall be those obtained from tests carried out by manufacturer or independent testing agency signifying adherence to codes and standards.

.2 Contractor Certification: The Contractor shall certify the following:
- .1 The products and systems were installed in strict compliance with the specifications, manufacturer’s recommendations and all applicable local or state codes.
- .2 The specified field tests have been satisfactorily performed.
- .3 The ductwork was protected from dust and debris throughout construction and cleaned in accordance with Section 21 05 01

1.6 DELIVERY, STORAGE AND HANDLING

.1 Protect on site stored or installed absorptive material from moisture damage.

PART 2 PRODUCTS

2.1 SEAL CLASSIFICATION

.1 All Ductwork and plenums with a pressure class rating shall be constructed to seal class A in conformance with ASHRAE 90.1.
  .1 The specific article referenced in ASHRAE 90.1 is 6.4.4.2. Duct Sealing. This is applicable to most ductwork on this project (all ducts connected to a fan system). The pressure class of all duct systems can be read from the external static listed in the associate equipment schedule, and if not provided can be assumed at 250Pa. An example of a non-pressure class duct would be a transfer duct or cross talk – these can be sealed to Class C. Also refer to section 23 05 94 for the intent for pressure testing of the ducted air system.

.2 All other ductwork shall be constructed to a seal class C
  .1 An example of a non-pressure class duct would be a transfer duct or cross talk – these can be sealed to Class C. Also refer to section 23 05 94 for the intent for pressure testing of the ducted air system

.3 Seal classification:
  .1 Class A: longitudinal seams, transverse joints, duct wall penetrations and connections made airtight with sealant and tape.
  .2 Class C: transverse joints and connections made air tight with gaskets, sealant, tape], or combination thereof. Longitudinal seams unsealed.

2.2 SEALANT

.1 Sealant: Low VOC oil resistant, water borne, polymer type flame resistant duct sealant. Temperature range of minus 30 degrees C to plus 93 degrees C.

2.3 TAPE

.1 Tape: polyvinyl treated, open weave fiberglass tape, 50 mm wide.

.2 Pressure sensitive tape shall not be used as the primary sealant, unless it has been certified to comply with UL-181A or UL-181B as per ASHRAE.

2.4 DUCT LEAKAGE

.1 All ductwork designed to operate at static pressures in excess of 750 PA and all exterior ductwork shall be tested as required by ASHRAE 90.1.

.2 Duct Leakage Testing shall be performed in accordance with SMACNA HVAC Air Duct Leakage Test Manual.

2.5 FITTINGS

.1 Fabrication: to SMACNA and ASHRAE.

.2 Radiused elbows.
  .1 Rectangular: standard radius, short radius with single thickness turning vanes, Centreline radius: 1.5 times width of duct.
  .2 Round: smooth radius. Centreline radius: 1.5 times diameter.

.3 Mitred elbows, rectangular:

.1 To 400 mm: with minimum single thickness turning vanes.
.2 Over 400 mm: with double thickness turning vanes.

.4 Branches:
.1 Rectangular main and branch: with 45 degrees entry on branch.
.2 Round main and branch: enter main duct at 45 degrees with conical connection.
.3 Provide volume control damper in branch duct near connection to main duct.
.4 Main duct branches: with splitter damper.

.5 Transitions:
.1 Diverging: 20 degrees maximum included angle.
.2 Converging: 30 degrees maximum included angle.

.6 Offsets:
.1 Full or short radiused elbows as indicated.

.7 Obstruction deflectors: maintain full cross-sectional area.
.1 Maximum included angles: as for transitions.

2.6 FIRE STOPPING

.1 Retaining angles around duct, on both sides of fire separation in accordance with Section 07 84 00 - Firestopping.

.2 Fire stopping material and installation must not distort duct.

2.7 GALVANIZED STEEL

.1 Lock forming quality: to ASTM A 653/A 653M, G90/Z275 zinc coating.

.2 Thickness, fabrication and reinforcement: to ASHRAE and SMACNA.

.3 Joints: to ASHRAE and SMACNA. Proprietary manufactured duct joints to be considered if meet class A seal.

2.8 HANGERS AND SUPPORTS

.1 Hangers and Supports: in accordance with Section 23 05 29 - Hangers and Supports for HVAC Piping and Equipment.

.2 Strap hangers: of same material as duct but next sheet metal thickness heavier than duct.
.1 Maximum size duct supported by strap hanger: 500.

.3 Hanger configuration: to ASHRAE and SMACNA.
.1 Hangers: galvanized steel angle hangers with supporting rods, locking nuts and washers to ASHRAE and SMACNA as per the following table:

Duct Size (mm)	Angle Size (mm)	Rod Size (mm)	Spacing (m)
up to 750	25 x 25 x 3	6	3
751 to 1050	40 x 40 x 3	6	3
1051 to 1500	40 x 40 x 3	10	3
1501 to 2100	50 x 50 x 3	10	2.5
2101 to 2400	50 x 50 x 5	10	2.5
2401 and over	50 x 50 x 6	10	2.5

.4 Upper hanger attachments:
- .1 For concrete: manufactured concrete inserts.
- .2 For steel joist: manufactured joist clamp, steel plate washer.
- .3 For steel beams: manufactured beam clamps:

PART 3 EXECUTION

3.1 GENERAL

.1 Do work in accordance with ASHRAE and SMACNA standards.

.2 Do not break continuity of insulation vapour barrier with hangers or rods.
- .1 Insulate strap hangers 100 mm beyond insulated duct
- .2 Ensure diffuser is fully seated

.3 Support risers in accordance with SMACNA.

.4 Install breakaway joints in ductwork on sides of fire separation.

.5 Install proprietary manufactured flanged duct joints in accordance with manufacturer's instructions.

.6 Manufacture duct in lengths and diameter to accommodate installation of 15mm internal acoustic duct lining where indicated on drawings.

.7 Ground across flexible connector with No. 2/0 braided copper strap.

.8 Provide offsets as required to prevent interferences.

.9 Install Air Duct Accessories defined in Section 23 33 00.

.10 Install 1” test plugs, with chain and cap, where required to accommodate testing and balancing instruments.

3.2 HANGERS

.1 Strap hangers: install in accordance with SMACNA.

.2 Angle hangers: complete with locking nuts and washers.

3.3 SEALING AND TAPING

.1 Apply sealant to outside of joint to manufacturer's recommendations.

.2 Bed tape in sealant and recoat with minimum of one coat of sealant to manufacturers recommendations.

3.4 LEAKAGE TESTS

.1 Refer to Section 23 05 94 - Pressure Testing of Ducted Air Systems

.2 Perform visual inspections throughout construction to ensure proper sealing.

.3 Self-perform trail leakage tests as required to ensure sealing techniques are adequately achieving desired seal classification.

.4 Provide ductwork free of audible leaks in quiet ambient.

.5 Complete tests before performance insulation or concealment Work.

END OF SECTION

PART 1 GENERAL

1.1 SUMMARY

.1 Section Includes:
- .1 Materials and installation for duct accessories including flexible connections, access doors, vanes and collars.

1.2 RELATED SECTIONS

.1 Section 01 33 00 - Submittal Procedures.

.2 Section 07 84 00 - Firestopping.

.3 Section 23 05 29 - Hangers and Supports for HVAC Piping and Equipment.

.4 Section 23 31 13.01 – Metal Ducts – Low Pressure to 500 Pa_

1.3 REFERENCES

.1 Sheet Metal and Air Conditioning Contractors' National Association (SMACNA).
- .1 SMACNA - HVAC Duct Construction Standards - Metal and Flexible.

1.4 SUBMITTALS

.1 Submittals in accordance with Section 01 33 00 - Submittal Procedures.

.2 Test Reports: submit certified test reports from approved independent testing laboratories indicating compliance with specifications for specified performance characteristics and physical properties.
- .1 Certification of ratings: catalogue or published ratings to be those obtained from tests carried out by manufacturer or independent testing agency signifying adherence to codes and standards.

.3 Certificates: submit certificates signed by manufacturer certifying that materials comply with specified performance characteristics and physical properties.

.4 Instructions: submit manufacturer's installation instructions.

1.5 QUALITY ASSURANCE

.1 Certification of Ratings:
- .1 Catalogue or published ratings shall be those obtained from tests carried out by manufacturer or independent testing agency signifying adherence to codes and standards.

.2 Contractor Certification: The Contractor shall certify the following:
- .1 The products and systems were installed in strict compliance with the specifications, manufacturer’s recommendations and all applicable local or state codes.
- .2 The specified field tests have been satisfactorily performed.
- .3 The equipment was protected from dust and debris throughout construction and cleaned in accordance with Section 21 05 01

1.6 DELIVERY, STORAGE AND HANDLING

.1 Protect on site stored or installed absorptive material from moisture damage.

PART 2 PRODUCTS

2.1 GENERAL

.1 Manufacture in accordance with SMACNA - HVAC Duct Construction Standards.

2.2 FLEXIBLE CONNECTIONS

.1 Frame: galvanized sheet metal frame 0.66mm thick with fabric clenched by means of double locked seams.

.2 Material:
- .1 Fire resistant, self extinguishing, neoprene coated glass fabric, temperature rated at minus 40 degrees C to plus 90 degrees C, density of 1.3 kg/m².

.3 Standard of Acceptance:
- .1 Duro-dyne, Vent Fabrics

2.3 ACCESS DOORS IN DUCTS

.1 Non-Insulated Ducts: sandwich construction of same material as duct, one sheet metal thickness heavier, minimum 0.6 mm thick complete with sheet metal angle frame.

.2 Insulated Ducts: sandwich construction of same material as duct, one sheet metal thickness heavier, minimum 0.6 mm thick complete with sheet metal angle frame and 25 mm thick rigid glass fibre insulation.

.3 Gaskets: neoprene sponge air seal all around.

.4 Hardware:
- .1 Up to 300 x 300mm: two sash locks complete with safety chain.
- .2 301 to 450mm: four sash locks complete with safety chain.
- .3 451 to 1000 mm: piano hinge and minimum two sash locks.
- .4 Doors over 1000 mm: piano hinge and two handles operable from both sides
- .5 Hold open devices.

.5 Standard of Acceptance:
- .1 Miami Carey, Air-O-Metal, Kruger, Maxam, Nailor Hart

2.4 TURNING VANES

.1 Factory or shop fabricated single thickness and double thickness with or without trailing edge to recommendations of SMACNA and as indicated.

2.5 INSTRUMENT TEST

.1 1.6 mm thick steel zinc plated after manufacture.

.2 Cam lock handles with neoprene expansion plug and handle chain.

.3 28 mm minimum inside diameter. Length to suit insulation thickness.

.4 Neoprene mounting gasket.

2.6 SPIN-IN COLLARS

.1 Conical galvanized sheet metal spin-in collars with lockable butterfly damper.

.2 Sheet metal thickness to co-responding round duct standards.

PART 3 EXECUTION

3.1 GENERAL

.1 Compliance: comply with manufacturer's written recommendations or specifications, including product technical bulletins, handling, storage and installation instructions, and data sheet.

.2 Pre-Installation Meetings:
- .1 Convene pre-installation meeting prior to beginning work of on-site installations in accordance
  - .1 Verify project requirements.
  - .2 Review installation conditions.
  - .3 Co-ordination with other building subtrades.
  - .4 Review manufacturer's installation instructions and warranty requirements.

3.2 INSTALLATION

.1 Flexible Connections:
- .1 Install in following locations:
  - .1 Inlets and outlets to fans.
  - .2 Inlets and outlets of Rooftop Units and ERV's.
  - .3 As noted
- .2 Minimum distance between metal parts when system in operation: 50 mm for systems < 470 L/s CFM, 100mm for systems with >470 L/s
- .3 Install in accordance with recommendations of SMACNA.
- .4 When fan is running:
  - .1 Ducting on sides of flexible connection to be in alignment.
  - .2 Ensure slack material in flexible connection.

.2 Access Doors and Viewing Panels:
- .1 Size:
  - .1 600 x 600 mm for person size entry.
  - .2 300 x 300 mm for hand servicing entry and viewing.
  - .3 As indicated.
- .2 Locations:
  - .1 Fire and smoke dampers.
  - .2 Control dampers.
  - .3 Devices requiring maintenance.
  - .4 Required by code.
  - .5 Reheat coils.
  - .6 Elsewhere as indicated.

.3 Instrument Test Ports:
- .1 General:
  - .1 Install in accordance with recommendations of SMACNA and in accordance with manufacturer's instructions.

.2 Locate to permit easy manipulation of instruments.
.3 Install insulation port extensions as required.
.4 Locations:
.1 For traverse readings:
.1 Ducted inlets to roof and wall exhausters.
.2 Inlets and outlets of other fan systems.
.3 Main and sub-main ducts.
.4 And as indicated.
.2 For temperature readings:
.1 At outside air intakes.
.2 In mixed air applications in locations as approved by Engineer.
.3 At inlet and outlet of coils.
.4 Downstream of junctions of two converging air streams of different temperatures.
.5 And as indicated.

.4 Turning vanes:
.1 Install in accordance with recommendations of SMACNA and as indicated.

END OF SECTION

PART 1 GENERAL

1.1 SUMMARY

.1 Section Includes:
- .1 Balancing dampers for mechanical forced air ventilation and air conditioning systems.
- .2 Operating dampers for mechanical forced air ventilation and air conditioning systems.
- .3 Fire and smoke dampers, and fire stop flaps.

1.2 RELATED SECTIONS

.1 Section 01 33 00 - Submittal Procedures.

.2 Section 07 84 00 - Firestopping.

.3 Section 23 31 13.01 – Metal Ducts – Low Pressure to 500 Pa

1.3 REFERENCES

.1 American National Standards Institute/National Fire Protection Association (ANSI/NFPA)
- .1 ANSI/NFPA 90A, Standard for the Installation of Air Conditioning and Ventilating Systems.

.2 Sheet Metal and Air Conditioning National Association (SMACNA)
- .1 SMACNA HVAC Duct Construction Standards, Metal and Flexible.

.3 Underwriters Laboratories of Canada (ULC)
- .1 CAN4-S112-[M1990], Fire Test of Fire Damper Assemblies.
- .2 ULC-S505-[1974], Fusible Links for Fire Protection Service.

1.4 SUBMITTALS

.1 Submittals in accordance with Section 01 33 00 - Submittal Procedures.

.2 Test Reports: submit certified test reports from approved independent testing laboratories indicating compliance with specifications for specified performance characteristics and physical properties.
- .1 Certification of ratings: catalogue or published ratings to be those obtained from tests carried out by manufacturer or independent testing agency signifying adherence to codes and standards.

.3 Certificates: submit certificates signed by manufacturer certifying that materials comply with specified performance characteristics and physical properties.

.4 Instructions: submit manufacturer's installation instructions.

1.5 QUALITY ASSURANCE

.1 Certification of Ratings:
- .1 Catalogue or published ratings shall be those obtained from tests carried out by manufacturer or independent testing agency signifying adherence to codes and standards.

.2 Contractor Certification: The Contractor shall certify the following:
- .1 The products and systems were installed in strict compliance with the specifications, manufacturer’s recommendations and all applicable local or state codes.
- .2 The specified field tests have been satisfactorily performed.

.3 The equipment was protected from dust and debris throughout construction and cleaned in accordance with Section 21 05 01

1.6 DELIVERY, STORAGE, AND HANDLING

.1 Protect on site stored or installed absorptive material from moisture damage.

PART 2 PRODUCTS

2.1 GENERAL

.1 Manufacture to SMACNA standards.

.2 Acceptable Manufacturer:
- .1 Alumavent.
- .2 Ventex.
- .3 Tamco.
- .4 Nailor.

2.2 SINGLE BLADE DAMPERS

.1 Fabricate from same material as duct, but one sheet metal thickness heavier. V-groove stiffened.

.2 Size and configuration to meet SMACNA requirements.

.3 Locking quadrant with shaft extension to accommodate insulation thickness where indicated.

.4 Inside and outside nylon or bronze end bearings.

.5 Channel frame of same material as adjacent duct, complete with angle stop.

2.3 MULTI-BLADED DAMPERS

.1 Factory manufactured of material compatible with duct.

.2 Opposed blade: configuration, metal thickness and construction to recommendations of SMACNA.

.3 Maximum blade height: 100 mm.

.4 Bearings: self-lubricating nylon.

.5 Linkage: shaft extension with locking quadrant.

.6 Channel frame of same material as adjacent duct, complete with angle stop.

.7 Operator: Refer to Division 25

.8 Maximum leakage : 1 % at 500Pa static pressure.

2.4 MULTI-LEAF INSULATED DAMPERS

.1 Opposed blade type.

.2 Extruded aluminum, interlocking blades, complete with extruded vinyl seals, spring stainless steel side seals, structurally formed extruded aluminum frame.

.3 Pressure fit self-lubricated bronze bearings.

.4 Linkage: plated steel tie rods, brass pivots and plated steel brackets, complete with plated steel control rod.

.5 Operator: Refer to Division 25

.6 Performance:
- .1 Leakage: in closed position less than 90 L/s/sq m of rated air flow at 250 Pa differential across damper in accordance with ASHRAE 90.1

.7 Insulated aluminum dampers:
- .1 Frames: insulated with extruded polystyrene foam with RSI 0.88.
- .2 Blades: constructed from aluminum extrusions with internal hollows insulated with polyurethane or polystyrene foam, RSI 0.88.

2.5 BACK DRAFT DAMPERS

.1 Automatic gravity operated, aluminum or steel construction with nylon bearings, spring assisted or counterweighted.

2.6 RELIEF DAMPERS

.1 Automatic multi-leaf aluminum] dampers with vinyl seals, with ball bearing centre pivoted and counter-weights set to open at 10 Pa static pressure.

2.7 FIRE DAMPERS

.1 Fire dampers: arrangement Type A, B, C, listed and bear label of ULC, and meet requirements of provincial fire authority, Fire Commissioner of Canada (FCC), ANSI/NFPA 90A, and all authorities having jurisdiction. Fire damper assemblies fire tested in accordance with CAN4-S112.

.2 Mild steel, factory fabricated for fire rating requirement to maintain integrity of fire wall and/or fire separation.
- .1 Fire dampers: 1-1/2 hour fire rated unless otherwise indicated.
- .2 Fire dampers: automatic operating type and have dynamic rating suitable for maximum air velocity and pressure differential to which it will be subjected.

.3 Top hinged: offset single damper, round or square; multi-blade hinged or interlocking type; roll door type; guillotine type; sized to maintain full duct cross section.

.4 Fusible link actuated, weighted to close and lock in closed position when released or having negator-spring-closing operator for multi-leaf type or roll door type in horizontal position with vertical air flow.

.5 40 x 40 x 3 mm retaining angle iron frame, on full perimeter of fire damper, on both sides of fire separation being pierced.

.6 Equip fire dampers with steel sleeve or frame installed disruption ductwork or impair damper operation.

.7 Equip sleeves or frames with perimeter mounting angles attached on both sides of wall or floor opening. Construct ductwork in fire-rated floor-ceiling or roof-ceiling assembly systems with air ducts that pierce ceiling to conform with ULC.

.8 Design and construct dampers to not reduce duct or air transfer opening cross-sectional area.

.9 Dampers shall be installed so that the centerline of the damper depth or thickness is located in the centerline of the wall, partition of floor slab depth or thickness.

.10 Unless otherwise indicated, the installation details given in SMACNA Install Fire Damp HVAC and in manufacturer's instructions for fire dampers shall be followed.

2.8 SMOKE DAMPERS

.1 Smoke Dampers: to be ULC or UL listed and labelled.

.2 Normally closed reverse action smoke vent (S/D-RASV): folding blade type, opening by gravity upon detection of smoke, [and/or] [from remote alarm signalling device actuated by an electro thermal link] [as indicated]. Two flexible stainless steel blade edge seals to provide required constant sealing pressure.

.3 Normally open smoke/seal (S/D-SSSD): folding blade type, closing when actuated by means of electro thermal link [and/or] [from remote alarm signalling device]. Blade edge seals of flexible stainless steel to provide required constant sealing pressure. Provide stainless steel negator springs with locking devices to ensure positive closure for units mounted horizontally in vertical ducts.

.4 Motorized (S/D-M): folding blade type, normally open with power on. When power is interrupted damper shall close automatically. Both damper and damper operator shall be ULC listed and labelled.

.5 Electro thermal link (S/D-ETL): dual responsive fusible link which melts when subjected to local heat of 74 degrees C and from external electrical impulse of low power and short duration; ULC or UL listed and labelled.

2.9 COMBINATION FIRE AND SMOKE DAMPERS

.1 Damper: similar to smoke dampers specified above.

.2 Combined actuator: electrical control system actuated from smoke sensor or smoke detection system and from fusible link.

2.10 FIRE STOP FLAPS

.1 Fire smoke flaps: ULC listed and labelled and fire tested in accordance with CAN4-S112.2.

.2 Construct of minimum 1.5 mm thick sheet steel with 1.6 mm thick non-asbestos ULC listed insulation and corrosion-resistant pins and hinges.

.3 Flaps held open with fusible link conforming to ULC-S505 and close at 74 degrees C or as indicated.

PART 3 EXECUTION

3.1 MANUFACTURER'S INSTRUCTIONS

.1 Compliance: comply with manufacturer's written recommendations or specifications, including product technical bulletins, handling, storage and installation instructions, and datasheet.

3.2 INSTALLATION

.1 Install where indicated.

.2 Install in accordance with recommendations of SMACNA and in accordance with manufacturer's instructions.

.3 Locate balancing dampers in each branch duct, for supply, return and exhaust systems.

.4 Runouts to registers and diffusers: install single blade damper located as close as possible to main ducts.

.5 Dampers: vibration free.

.6 Ensure damper operators are observable and accessible.

.7 Corrections and adjustments conducted by Engineer.

.8 Seal multiple damper modules with silicon sealant.

3.3 INSTALLATION OF FIRE AND FIRE AND SMOKE DAMPERS

.1 Install in accordance with ANSI/NFPA 90A and in accordance with conditions of ULC listing.

.2 Maintain integrity of fire separation.

.3 After completion and prior to concealment obtain approvals of complete installation from authority having jurisdiction.

.4 Install access door adjacent to each damper. See Section 23 33 00 - Air Duct Accessories.

.5 Co-ordinate with installer of firestopping.

.6 Ensure access doors/panels, fusible links, damper operators are easily observed and accessible.

.7 Install break-away joints of approved design on each side of fire separation.

3.4 CLEANING

.1 Upon completion and verification of performance of installation, remove surplus materials, excess materials, rubbish, tools and equipment.

END OF SECTION

PART 1 GENERAL

1.1 SUMMARY

.1 Section Includes:
- .1 Materials and installation of flexible ductwork, joints and accessories.

1.2 RELATED SECTIONS

.1 Section 01 33 00 - Submittal Procedures.

.2 Section 07 84 00 - Firestopping.

.3 Section 23 05 29 - Hangers and Supports for HVAC Piping and Equipment.

.4 Section 23 05 94 - Pressure Testing of Ducted Air Systems.

.5 Section 23 33 00 – Air Duct Accessories

1.3 REFERENCES

.1 American Society of Heating, Refrigerating and Air-Conditioning Engineers, Inc. (ASHRAE).

.2 Sheet Metal and Air-Conditioning Contractors' National Association (SMACNA).
- .1 SMACNA HVAC Duct Construction Standards - Metal and Flexible, [95] (Addendum No.1, November 1997).
- .2 SMACNA IAQ Guideline for Occupied Buildings under Construction, 1st Edition [1995].

1.4 SUBMITTALS

.1 Shop Drawings:
- .1 Submit shop drawings in accordance with Section 01 33 00 - Submittal Procedures.
- .2 Indicate the following:
  - .1 Application of flexible ducts,
  - .2 Thermal properties.
  - .3 Friction loss.
  - .4 Acoustical loss.
  - .5 Leakage.
  - .6 Fire rating

1.5 QUALITY ASSURANCE

.1 Certification of Ratings:
- .1 Catalogue or published ratings to be those obtained from tests carried out by manufacturer or independent testing agency signifying adherence to codes and standards.

1.6 DELIVERY, STORAGE AND HANDLING

.1 Protect on site stored or installed absorptive material from moisture damage.

PART 2 PRODUCTS

2.1 GENERAL

.1 Factory fabricated to CAN/ULC-S110.

.2 Pressure drop coefficients listed below are based on relative sheet metal duct pressure drop coefficient of 1.00.

.3 Flame spread rating not to exceed 25. Smoke developed rating not to exceed 50.

.4 Length of flexible duct shall not exceed 2,440 mm.

.5 Standard of Acceptance
- .1 Thermaflex
- .2 Wiremold Co
- .3 Flexmaster

2.2 METALLIC - UNINSULATED

.1 Allowable for Supply, Return and Exhaust air diffuser/grille connections not required to have acoustic connection.

.2 Spiral wound flexible aluminum or stainless steel.

.3 Performance:
- .1 Factory tested to 2.5 kPa without leakage.
- .2 Maximum relative pressure drop coefficient: 3.

2.3 METALLIC - INSULATED

.1 Allowable for Fresh air diffuser/grille connections.

.2 Spiral wound flexible aluminum with factory applied, 50 mm thick flexible glass fibre thermal insulation with vapour barrier and vinyl, reinforced mylar/neoprene laminate, or aluminum jacket.

.3 Performance:
- .1 Factory tested to 2.5 kPa without leakage.
- .2 Maximum relative pressure drop coefficient: 3.

2.4 NON-METALLIC - UNINSULATED

.1 Allowable for Supply, Return and Exhaust air diffuser/grille connections not required to have acoustic connection.

.2 Non-collapsible, coated mineral base fabric, aluminum foil mylar type, mechanically bonded to, and helically supported by, external steel wire, as indicated.

.3 Performance:
- .1 Factory tested to 2.5 kPa without leakage.
- .2 Maximum relative pressure drop coefficient: 3

2.5 NON-METALLIC - INSULATED

.1 Allowable for Fresh air diffuser/grille connections.

.2 Non-collapsible, coated mineral base fabric, aluminum foil/mylar type mechanically bonded to, and helically supported by, external [steel wire with factory applied, 37 mm thick flexible mineral fibre thermal insulation with vapour barrier and vinyl reinforced mylar/neoprene laminate jacket.

.3 Performance:
- .1 Factory tested to 2.5 kPa without leakage.
- .2 Maximum relative pressure drop coefficient: 3

2.6 NON-METALLIC - ACOUSTIC INSULATED

.1 Shall be used for diffuser/grille connections in the following locations:
- .1 N/A

.2 Non-collapsible, coated mineral base perforated fabric type helically supported by and mechanically bonded to steel wire with factory applied flexible mineral fibre acoustic insulation and encased in aluminum foil/mylar laminate Type M vapour barrier.

.3 Performance:
- .1 Factory tested to 2.5kPa without leakage.
- .2 Maximum relative pressure drop coefficient: 3.
- .3 Acoustical performance: Minimum attenuation (dB/m) to following table:

	Frequency (Hz)				
Duct Diam:	125	250	500	1000	2000
[100]	[0.6]	[3]	[12]	[27]	[0]
[150]	[1.2]	[3]	[12]	[22]	[27]
[200]	[2.0]	[5]	[12]	[19]	[20]
[300]	[2.4]	[5]	[12]	[16]	[15]

PART 3 EXECUTION

3.1 DUCT INSTALLATION

.1 Install in accordance with: CAN/ULC-S110, UL-181 and SMACNA Requirements.

END OF SECTION

PART 1 GENERAL

1.1 SUMMARY

.1 Section Includes:
- .1 Fans, motors, accessories and hardware for commercial use.

1.2 RELATED SECTIONS

.1 Section 01 33 00 - Submittal Procedures

.2 Section 01 78 00 - Closeout Submittals

.3 Section 21 05 01 – Common Work Results for Mechanical.

.4 Section 21 07 19 - Thermal Insulation for Equipment

.5 Section 23 05 48 - Vibration and Seismic Controls for HVAC Piping and Equipment

1.3 REFERENCES

.1 Air Conditioning and Mechanical Contractors (AMCA)
- .1 AMCA Publication 99, Standards Handbook.
- .2 AMCA 300, Reverberant Room Method for Sound Testing of Fans.
- .3 AMCA 301, Methods for Calculating Fan Sound Ratings from Laboratory Test Data.

.2 American National Standards Institute (ANSI)/American Society of Mechanical Engineers (ASME)
- .1 ANSI/AMCA 210, Laboratory Methods of Testing Fans for Aerodynamic Performance Rating.

.3 Canadian General Standards Board (CGSB)
- .1 CAN/CGSB 1.181-[99], Ready-Mixed Organic Zinc-Rich Coating.

1.4 SYSTEM DESCRIPTION

.1 Performance Requirements:
- .1 Catalogued or published ratings for manufactured items: obtained from tests carried out by manufacturer or those ordered by manufacturer from independent testing agency signifying adherence to codes and standards in force.
- .2 Capacity: flow rate, total and static pressure, bhp, W, efficiency, revolutions per minute, power, model, size, sound power data and as indicated on schedule.
- .3 Fans: statically and dynamically balanced, constructed in conformity with AMCA 99.
- .4 Sound ratings: comply with AMCA 301, tested to AMCA 300. Supply unit with AMCA certified sound rating seal.
- .5 Performance ratings: based on tests performed in accordance with ANSI/AMCA 210. Supply unit with AMCA certified rating seal, except for propeller fans smaller than 300 mm diameter.

1.5 SUBMITTALS

.1 Shop Drawings:
- .1 Submit shop drawings in accordance with Section 01 33 00 - Submittal Procedures.
- .2 Indicate the following:

.1 General arrangement, drawing of each unit including product description, model number, dimensions, unit weights, mounting,
.2 Fan make, model and performance information including: fan curves with specified operating point clearly indicated,
.3 Motor, sheaves, bearings, shaft details
.4 Fan efficiencies, fan isolation details.
.5 Minimum performance achievable with variable speed controllers where applicable
.6 Clearances for operation, maintenance, servicing.
.7 Sound power levels for each octave band for at fan inlet, fan outlet and each unit opening.
.8 Submit product data of filter media, filter performance data, filter assembly, and filter frames.
.9 Submit electrical requirements for power supply wiring including wiring diagrams for interlock and control wiring, clearly indicating factory-installed disconnects and field-installed wiring.
.10 Details of sensors or prewired controls devices

.3 Omission of any of the above information will cause shop drawings to be immediately returned without review.

.2 Quality assurance submittals: submit following in accordance with Section 01 33 00 - Submittal Procedures.
.1 Certificates: submit certificates signed by manufacturer certifying that materials and all factory tests comply with specified performance characteristics and physical properties.
.2 Instructions: submit manufacturer's installation instructions.
.3 Operation and Maintenance Manuals: manufacturer’s printed operation and maintenance manuals shall be submitted.
.4 Manufacturer’s Warranties: Manufacturer’s printed warranties, as specified hereinafter, shall be submitted.

.3 Closeout Submittals:
.1 Submit operation and maintenance data for incorporation into manual specified in Section 01 78 00 - Closeout Submittals.

1.6 QUALITY ASSURANCE

.1 Manufacturer’s Certification: The manufacturer shall certify the following:
.1 The products and systems furnished are in strict compliance with the specifications.
.2 The equipment components have been properly coordinated and integrated to provide a complete and operable unit.
.3 Fans conform to AMCA bulletins regarding testing and construction. (Airfoil fans shall bear the AMCA certified rating seal for airflow and sound).
.4 Filter media is ULC listed.
.5 The specified factory tests have been performed and passed
.6 After construction, units were cleaned thoroughly before shipping.
.7 Prior to shipping units where stored in a dry heated environment, fan wheels where rotated monthly and inspected regularly for damage.

.2 Contractor Certification: The Contractor shall certify the following:
.1 The products and systems were installed in strict compliance with the specifications, manufacturer’s recommendations and all applicable local or state codes.
.2 The specified field tests have been satisfactorily performed.
.3 Units received on site were as specified
.4 Units received were free from damage
.5 From the time of receipt of the units on site to turn over to the owner, the units were maintained in a weather tight fashion and inspected regularly. Fan wheels were rotated

monthly and any job site moisture was removed immediately.

1.7 MAINTENANCE

.1 Extra Materials:
- .1 Provide maintenance materials in accordance with Section 01 78 00 - Closeout Submittals.
- .2 Spare parts to include:
  - .1 Matched sets of belts.
- .3 Furnish list of individual manufacturer's recommended spare parts for equipment, include:
  - .1 Bearings and seals.
- .4 Addresses of suppliers.
- .5 List of specialized tools necessary for adjusting, repairing or replacing.

1.8 DELIVERY, STORAGE, AND HANDLING

.1 Packing, shipping, handling and unloading:
- .1 Deliver, store and handle in accordance with manufacturer's written instructions and Section 01 61 00 - Common Product Requirements.

PART 2 PRODUCTS

2.1 FANS GENERAL

.1 Motors:
- .1 In accordance with Section 23 05 13 - Common Motors Requirements for HVAC Equipment supplemented as specified herein.
- .2 For use with variable speed controllers where indicated.
- .3 Sizes as indicated and specified on drawings

.2 Accessories and hardware: matched sets of V-belt drives, variable motor sheaves, adjustable slide rail motor bases, belt guards, coupling guards fan inlet and outlet safety screens as indicated and as specified in Section 23 05 13 - Common Motor Requirements for HVAC Equipment

.3 Factory primed painted and enamel finish in colour standard to manufacturer.

.4 Scroll casing drains: as indicated.

.5 Heavy duty self-aligning bearings with lubrication systems plus extension lubrication tubes where bearings are not easily accessible.

.6 Vibration isolation: to Section 23 05 48 - Vibration and Seismic Controls for HVAC Piping and Equipment.

.7 Flexible connections: to Section 23 33 00 - Air Duct Accessories

2.2 CENTRIFUGAL CABINET FANS

.1 Multi-blade backward inclined aluminum wheel in heavy gauge steel housing.

.2 V-Belt driven fan (direct drive where indicated) with adjustable motor pulley and motor plate.

.3 Fan shaft mounted in ball bearing pillow blocks.

.4 Bearings: heavy duty, split pillow-block, grease lubricated ball or roller self aligning type with oil retaining, dust excluding seals and a certified minimum rated life of 100,000 hours.

.5 Housings:
- .1 Cabinet hung single or multiple wheel with centrifugal fans in factory fabricated casing complete with vibration isolators and seismic control measures, motor, variable speed, V-belt drive and guard inside casing.
- .2 Fabricate casing of zinc coated or phosphate treated steel of reinforced and braced for rigidity. Provide removable panels for access to interior. Paint uncoated, steel parts with corrosion resistant paint to CAN/CGSB 1.181. Finish inside and out, over prime coat, with rust resistant enamel. Internally line cabinet with 25mm thick rigid acoustic insulation, pinned and cemented, complete with perforated metal liner.
- .3 Volute with inlet cones: fabricated steel for wheels 300 mm or greater, steel or aluminum, for smaller wheels, braced, and with welded supports.
- .4 For horizontally and vertically split housings provide flanges on each section for bolting together, with gaskets of non-oxidizing non-flammable material.
- .5 Provide latched airtight access doors with handles.

.6 Standard of Acceptance:
- .1 Greenheck, Cook, Penn, JenCo

2.3 ROOF MOUNTED EXHAUST FANS

.1 Centrifugal V belt or direct driven as indicated.

.2 Housings: spun aluminum complete with resilient mounted motor and fan on neoprene anti-vibration pads.

.3 Impeller: aluminum non-overloading.

.4 Adjustable motor sheave

.5 Accessories:
- .1 12mm mesh aluminum birdscreen.
- .2 Automatic motorized gasketted aluminum backdraft dampers.
- .3 Disconnect switch within fan housing.
- .4 Continuous curb gaskets, stainless steel securing bolts and screws, and curbs where indicated.
- .5 Hinge curb plate for access to internals for maintenance.

.6 Standard of Acceptance:
- .1 Greenheck, Cook, Penn, Jenco

PART 3 EXECUTION

3.1 MANUFACTURER'S INSTRUCTIONS

.1 Compliance: comply with manufacturer's written recommendations or specifications, including product technical bulletins, handling, storage and installation instructions, and datasheet.

3.2 FAN INSTALLATION

.1 Install fans as indicated, complete with resilient mountings specified in Section 23 05 48 - Vibration and Seismic Controls for HVAC Piping and Equipment, flexible electrical leads and flexible connections in accordance with Section 23 33 00 - Air Duct Accessories.

.2 Provide sheaves and belts required for final air balance.

.3 Bearings and extension tubes to be easily accessible.

.4 Access doors and access panels to be easily accessible.

END OF SECTION

PART 1 GENERAL

1.1 REFERENCES

.1 Canadian Standards Association (CSA International)
- .1 CSA C22.1-15, Canadian Electrical Code, Part 1 (23rd edition) Safety Standard for Electrical Installations
- .2 CSA C22.3- No.1-10, Overhead Systems
- .3 CSA C22.2 No 141.
- .4 CAN3-C235-83(R2000), Preferred Voltage Levels for AC Systems, 0 to 50,000 V.
- .5 CAN/CSA C282, Emergency Electrical Power Supply for Buildings
- .6 CAN/CSA-B72-M87, Installation Code for Lightning Protection Systems

.2 Institute of Electrical and Electronics (IEEE)/National Electrical Safety Code Product Line (NESC)
- .1 IEEE SP1122-2000, The Authoritative Dictionary of IEEE Standards Terms, 7th Edition.

.2 Institute of Electrical and Electronics (IEEE)/National Electrical Safety Code Product Line (NESC)
- .1 Institute of Electrical and Electronics (IEEE)/National Electrical Safety Code Product Line (NESC)
- .2 IEEE SP1122-[2000], The Authoritative Dictionary of IEEE Standards Terms, 7th Edition.

.3 CAN/ULC-S524 – Standard for the Installation of Fire Alarm Systems

.4 CAN/ULC-S139 Standard Method of Fire Test for Evaluation of Integrity of Electrical Cables

.5 National Building Code of Canada

.6 All governing municipal requirements

1.2 DEFINITIONS

.1 Electrical and electronic terms: unless otherwise specified or indicated, terms used in these specifications, and on drawings, are those defined by IEEE SP1122.

1.3 DESIGN REQUIREMENTS

.1 Operating voltages: to CAN3-C235.

.2 Motors, electric heating, control and distribution devices and equipment to operate satisfactorily at 60 Hz within normal operating limits established by above standard.
- .1 Equipment to operate in extreme operating conditions established in above standard without damage to equipment.

.3 Language operating requirements: Provide identification nameplates and labels for control items in English.

1.4 ACTION AND INFORMATIONAL SUBMITTALS

.1 Submittals: in accordance with Section 01 33 00 - Submittal Procedures.

.2 Submit for review single line electrical diagrams in glazed frames and locate on-site with Consultant.

.3 Shop drawings:
- .1 Submit drawings stamped and signed by professional engineer registered or licensed in Province of Ontario, Canada, only for systems where required by Provincial or Federal Law.
- .2 Submit wiring diagrams and installation details of equipment indicating proposed location, layout and arrangement, control panels, accessories, piping, ductwork, and other items that must be shown to ensure co-ordinated installation.
- .3 Identify on wiring diagrams circuit terminals and indicate internal wiring for each item of equipment and interconnection between each item of equipment.
- .4 Indicate on drawings clearances for operation, maintenance, and replacement of operating equipment devices.
- .5 Submit copies of drawings and product data to authority having jurisdiction and inspection authorities as required.
- .6 If changes are required, notify Consultant of these changes before they are made.

.4 Quality Control: in accordance with Section 01 45 00 - Quality Control.
- .1 Provide CSA certified equipment and material.
- .2 Where CSA certified equipment and material is not available, submit such equipment and material to inspection authorities for special approval before delivery to site.
- .3 Submit test results of installed electrical systems and instrumentation.
- .4 Permits and fees: in accordance with General Conditions of contract.
- .5 Submit, upon completion of Work, load balance report as described in PART 3 - LOAD BALANCE.
- .6 Submit certificate of acceptance from authority having jurisdiction upon completion of Work to Consultant.
- .7 Manufacturer's Field Reports: submit to Consultant manufacturer's written report, within 7 days of review, verifying compliance of Work as described in PART 3 - FIELD QUALITY CONTROL.

.5 Arc Flash Hazard Analysis:
- .1 Submit an arc flash hazard analysis performed according to requirements and calculations as referenced in CAN/CSA Z462.
- .2 Arc-Flash Hazard Analysis shall include the main 600V switchgear, 600V and 208V power panels as required to meet the requirement of CAN/CSA Z462.
- .3 Provide equipment labels for all existing and new pieces of equipment to suit hazard index and appropriate PPE to suit CAN/CSA Z462.

1.5 QUALITY ASSURANCE

.1 Quality Assurance: in accordance with Section 01 45 00 - Quality Control.

.2 Qualifications: electrical Work to be carried out by qualified, licensed electricians who hold valid Master Electrical Contractor license as per the conditions of Provincial Act respecting manpower vocational training and qualification.

.3 Site Meetings:
- .1 In accordance with Section 01 32 16 - Construction Progress Schedule
- .2 Site Meetings: as part of Manufacturer's Field Services, schedule site visits, to review Work, at stages listed.
  - .1 After delivery and storage of products, and when preparatory Work is complete but before installation begins.

.2 Twice during progress of Work at 25% and 60% complete.
.3 Upon completion of Work, after cleaning is carried out.

.4 Health and Safety Requirements: do construction occupational health and safety in accordance with Section 01 35 29.06 - Health and Safety Requirements.

1.6 DELIVERY, STORAGE AND HANDLING

.1 Material Delivery Schedule: coordinate delivery of material to suit proposed construction schedule.

.2 Construction/Demolition Waste Management and Disposal: separate waste materials in accordance with Section 01 74 19 - Waste Management and Disposal.

1.7 SYSTEM STARTUP

.1 Instruct Consultant and operating personnel in operation, care and maintenance of systems, system equipment and components.

.2 Arrange and pay for services of manufacturer's factory service engineer to supervise start-up of installation, check, adjust, balance and calibrate components and instruct operating personnel.

.3 Provide these services for such period, and for as many visits as necessary to put equipment in operation, and ensure that operating personnel are conversant will aspects of its care and operation.

1.8 OPERATING INSTRUCTIONS AND MAINTENANCE DATA

.1 Provide for each system and principal item of equipment as specified in technical sections for use by operation and maintenance personnel.

.2 Operating instructions to include following:
.1 Wiring diagrams, control diagrams, and control sequence for each principal system and item of equipment.
.2 Start up, proper adjustment, operating, lubrication, and shutdown procedures.
.3 Safety precautions.
.4 Procedures to be followed in event of equipment failure.
.5 Other items of instruction as recommended by manufacturer of each system or item of equipment.

.3 Names and addresses of nearest suppliers for all items included in maintenance manuals.

.4 Print or engrave operating instructions and frame under glass or in approved laminated plastic.

.5 Post instructions where directed.

.6 For operating instructions exposed to weather, provide weather-resistant materials or weatherproof enclosures.

.7 Ensure operating instructions will not fade when exposed to sunlight and are secured to prevent easy removal or peeling.

1.9 WARRANTY

.1 All manufacturer product and contractor labour warranties **NOT** to commence until the issuance of a certificate of substantial performance once quipment is being utilized for its intended operational purpose, refer to Section 01 11 00 – Summary Of Work for project construction phasing.

PART 2 PRODUCTS

2.1 MATERIALS AND EQUIPMENT

.1 Provide material and equipment in accordance with Section 01 61 00 - Common Product Requirements.

.2 Material and equipment to be CSA certified. Where CSA certified material and equipment are not available, obtain special approval from inspection authorities before delivery to site and submit such approval as described in PART 1 - SUBMITTALS.

.3 Factory assembled control panels and component assemblies.

2.2 ELECTRIC MOTORS, EQUIPMENT AND CONTROLS

.1 Verify installation and co-ordination responsibilities related to motors, equipment and controls between Divisions, as indicated.

.2 Refer to Section 26 60 00 – Powered Equipment Schedule for coordination and division of work between trades.

2.3 WARNING SIGNS

.1 Warning Signs: in accordance with requirements of authority having jurisdiction, inspection authorities and Consultant.

.2 Porcelain enamel signs, minimum size 175 x 250 mm.

2.4 WIRING TERMINATIONS

.1 Ensure lugs, terminals, screws used for termination of wiring are 90 degrees Celsius rated suitable for either copper or aluminum conductors.

2.5 EQUIPMENT IDENTIFICATION

.1 Identify electrical equipment with nameplates and labels as follows:

.2 Identify electrical equipment with nameplates and labels as follows:

.1 Nameplates: Lamacoid 3mm (1/8”) thick engraving sheet, BLACK face for normal/backup power equipment and RED face for life safety power equipment, white core, lettering accurately aligned and engraved into core mechanically attached with self tapping screws or rivets.

.2 Printed adhesive backed labels in lieu of Lamacoid will NOT be considered as an acceptable alternate means of labeling.

.3 Labels: embossed plastic labels sized to suit mounting location and tag details, with 6mm high letters unless specified otherwise. Printed adhesive backed labels will NOT be acceptable.

.4 Wording on nameplates and labels to match equipment identifiers on plans and to be approved by Consultant prior to manufacture.

.5 Allow for minimum of twenty-five 25 letters per nameplate and label.

.6 Nameplates for terminal cabinets and junction boxes to indicate system and/or voltage characteristics.

.7 Distribution switchboard(s), power panels, lighting panels, lighting control panels, indicate system and/or voltage characteristics and if for relay panel if fed from more than one power source indicating the source locations.

.8 Disconnects, starters, contactors and push-button control stations: indicate equipment being controlled and voltage.

.9 Terminal cabinets and pull boxes: indicate system and voltage.

.10 Transformers: indicate capacity, primary and secondary voltages.

.11 Motorized equipment and operable wall controls: indicate equipment being controlled and voltage.

.12 All power device components including switches, receptacles and junction boxes are to be labeled similar to the following examples: “LPC1A-B-1, PPC1B-B, etc”.

.1 Provide clear printed adhesive label tags affixed to bottom front of faceplate in BLACK for normal/backup power distribution and in RED for life safety power distribution.

.2 Provide white printed adhesive label tags affixed to wall on inside of faceplate to indicate circuit feeding location to allow faceplates to be put back in the correct location if removed in the future.

2.6 WIRING IDENTIFICATION

.1 Identify wiring with permanent indelible identifying markings, coloured plastic tapes, on both ends of phase conductors of feeders and branch circuit wiring.

.2 Maintain phase sequence and colour coding throughout.

.3 Colour coding: to CSA C22.1.

.4 Use colour coded wires in communication cables, matched throughout system.

2.7 CONDUIT AND CABLE IDENTIFICATION

.1 Colour code conduits, boxes and metallic sheathed cables.

.2 Code with plastic tape or paint at points where conduit or cable enters wall, ceiling, or floor, and at 15 m intervals.

.3 Colours: 25 mm wide prime colour and 20 mm wide auxiliary colour.

	Prime	Auxiliary
up to 250 V	Yellow	Blue
up to 600 V	Yellow	Green
Telephone	Green	
Other	Green	Blue

Communication Systems	Yellow	
Fire Alarm	Red	
Emergency/Life Safety	Orange	
Security System	Red	Yellow

2.8 FINISHES

.1 Shop finish metal enclosure surfaces by application of rust resistant primer inside and outside, and at least two coats of finish enamel.

.1 Paint indoor normal/backup power switchgear and distribution enclosures light gray to ASA49.

PART 3 EXECUTION

3.1 INSTALLATION

.1 Do complete installation in accordance with CSA C22.1 except where specified otherwise.

.2 Do overhead and underground systems in accordance with CSA C22.3 No.1 except where specified otherwise.

3.2 NAMEPLATES AND LABELS

.1 Ensure manufacturer's nameplates, CSA labels and identification nameplates are visible and legible after equipment is installed.

3.3 CONDUIT AND CABLE INSTALLATION

.1 Install conduit and sleeves prior to pouring of concrete.

.2 Sleeves through concrete: schedule 40 steel pipe, sized for free passage of conduit, and protruding 50 mm.

.2 If plastic sleeves are used in fire rated walls or floors, remove before conduit installation.

.3 Install cables, conduits and fittings embedded or plastered over, close to building structure so furring can be kept to minimum.

.4 Arrange with Division 7 for flashing and weatherproofing of holes through exterior walls.

.5 Provide wire with flame spread rating suitable for application. (ie FT1, FT4, FT6 or MI cable as required to suit 1 HR FRR [ULC S139]).

.6 Coordinate with all other Divisions through General Contractor for associated conduit rough-ins to avoid coordination issues and enable installation of products supplied by other Divisions to suit final approved systems shop drawings.

3.4 LOCATION OF OUTLETS

.1 Locate outlets in accordance with Section 26 05 32 - Outlet Boxes, Conduit Boxes and Fittings.

.2 Do not install outlets back-to-back in wall; allow minimum 150 mm horizontal clearance between boxes.

.3 Change location of outlets at no extra cost or credit, providing distance does not exceed 3000 mm, and information is given before installation.

.4 Locate light switches on latch side of doors.
  .1 Locate disconnect devices in mechanical and elevator machine rooms on latch side of floor.

3.5 MOUNTING HEIGHTS

.1 Mounting height of equipment is from finished floor to centreline of equipment unless specified or indicated otherwise.

.2 If mounting height of equipment is not specified or indicated, verify before proceeding with installation.

.3 Install electrical equipment at following heights unless indicated otherwise.
  .1 Local switches: 1100 mm.to centreline of device box
  .2 Thermostats: 1200mm. to centerline of device box
  .3 Wall receptacles:
    .1 General: 400 mm (hammer) to centre or as indicated.
    .2 Systems Furniture locations: confirm rough-in location with Consultant..
    .3 Above top of counters or counter splash backs: 200 mm.
    .4 In mechanical/electrical rooms: 1000 mm.
    .5 Wall receptacles mounted on building exterior: 600mm above finished grade

  .4 Panelboards: as required by Code or as indicated.
  .5 Communications outlets:
    .1 General: 400 mm to centre or as indicated.
    .2 Systems Furniture locations: confirm rough-in location with Consultant..
    .3 Above top of counters or counter splash backs: 200 mm.

  .6 Fire alarm manual pull-stations: as required by Code.
  .7 Fire alarm wall mounted speakers/strobes: by Code or as indicated on drawings.
  .8 Television communication outlets: as indicated, confirm rough-in location with Consultant.

3.6 COORDINATION STUDY, TESTING AND COMMISSIONING

.1 Carry out general testing and commissioning in accordance with Section's 01 91 13 – General Commissioning (Cx) Requirements, and 01 79 00 Demonstration and Training.

.2 Retain the services of an independent test company to prepare the co-ordination study of the entire electrical distribution system. Cost of study shall be included and paid for by the contractor. Conduct the study to provide selective trip settings of all protection devices in the electrical distribution system.

.3 Prepare the co-ordination study on a log-log time-current characteristic sheet.

.4 Provide the following information on the co-ordination sheets:
  .1 Settings of Supply Authorities breaker/fuses
  .2 HV oil-filled step-down transformer and fusing
  .3 Main utility breaker characteristics 600V
  .4 Feeder breaker characteristics 600V
  .5 Thermal characteristics of transformers
  .6 Thermal characteristics of main HV primary/ LV secondary conductors

.7 Indicate available 3 phase and ground fault current at the 600V and 208V switchboards and panels.

.5 Submit the co-ordination study in the form of a sepia shop drawing.

.6 The manufacturer performing the co-ordination study shall conduct a pre-service and in-service testing and checking of the complete distribution system and components as follows:
- .1 Visual inspection of switchboard clearances, barriers, ventilation, grounding, etc.
- .2 Torque checking at busbar joints, cable connections, etc.
- .3 Mechanical and electrical operation of components and devices.
- .4 Instrumentation transformers, relays and instruments.
- .5 Test overcurrent, voltage and ground fault relays in accordance with manufacturers' recommendations and set devices as per co-ordination study.
- .6 Test current ratio of transformer on all tap positions, phase angle, insulation resistance and dielectric strength.
- .7 Test continuity and resistance of ground system
- .8 Phase rotation identification

.7 Remedy all defects and provide services as long as is required to commission the system. The cost of providing these services is part of this contract

3.7 CO-ORDINATION OF PROTECTIVE DEVICES

.1 Ensure circuit protective devices such as overcurrent trips, relays and fuses are installed to required values and settings to suit equipment coordination study and re-adjusted in the Existing Utility and Service Building as necessary.

3.8 FIELD QUALITY CONTROL

.1 Load Balance:
- .1 Measure phase current to panel boards with normal loads (lighting) operating at time of acceptance; adjust branch circuit connections as required to obtain best balance of current between phases and record changes.
- .2 Measure phase voltages at loads and adjust transformer taps to within 2% of rated voltage of equipment.
- .3 Provide upon completion of work, load balance report as directed in PART 1 - SUBMITTALS: phase and neutral currents on panelboards, dry-core transformers and motor control centres, operating under normal load, as well as hour and date on which each load was measured, and voltage at time of test.

.2 Conduct following tests in accordance with Section 01 45 00 - Quality Control.
- .1 Power generation and distribution system including phasing, voltage, grounding and load balancing.
- .2 Circuits originating from branch distribution panels.
- .3 Lighting and its control.
- .4 Motors, heaters and associated control equipment including sequenced operation of systems where applicable.
- .5 Systems: fire alarm system and communications.
- .6 Insulation resistance testing:
  - .1 Megger circuits, feeders and equipment up to 350 V with a 500 V instrument.
  - .2 Megger 350-600 V circuits, feeders and equipment with a 1000 V instrument.
  - .3 Check resistance to ground before energizing.

.3 Carry out tests in presence of Consultant.

.4 Provide instruments, meters, equipment and personnel required to conduct tests during and at conclusion of project.

.5 Manufacturer's Field Services:
- .1 Obtain written report from manufacturer verifying compliance of Work, in handling, installing, applying, protecting and cleaning of product and submit Manufacturer's Field Reports as described in PART 1 - SUBMITTALS.
- .2 Provide manufacturer's field services consisting of product use recommendations and periodic site visits for inspection of product installation in accordance with manufacturer's instructions.
- .3 Schedule site visits, to review Work, as directed in PART 1 - QUALITY ASSURANCE.

3.9 PROTECTION

.1 Protect exposed live equipment during construction for personnel safety.

.2 Shield and mark live parts 'LIVE 120 VOLTS' or with appropriate voltage.

.3 Arrange for installation of temporary doors for rooms containing electrical distribution equipment. Keep these doors locked except when under direct supervision.

3.10 ACCESS DOORS

.1 Supply access doors for furred ceilings or spaces for access to electrical fitments for installation under section erecting the walls or ceilings.

.2 Access doors, unless otherwise specified or shown, shall be flush mounted 600 × 600 mm (24” × 24”) for body entry, at least 12 gauge steel, finished prime coat only, with concealed hinges, screwdriver latches, anchor straps, rounded safety corners and shall open 180 degrees. Doors shall be of approved manufacturer with published literature.

3.11 FIREPROOFING

.1 Provision of all firestopping required for electrical service penetration of rated walls, floors and partitions shall be the responsibility of Division 7.

3.12 CLEANING

.1 Clean and touch up surfaces of shop-painted equipment scratched or marred during shipment or installation, to match original paint.

.2 Clean and prime exposed non-galvanized hangers, racks and fastenings to prevent rusting.

END OF SECTION

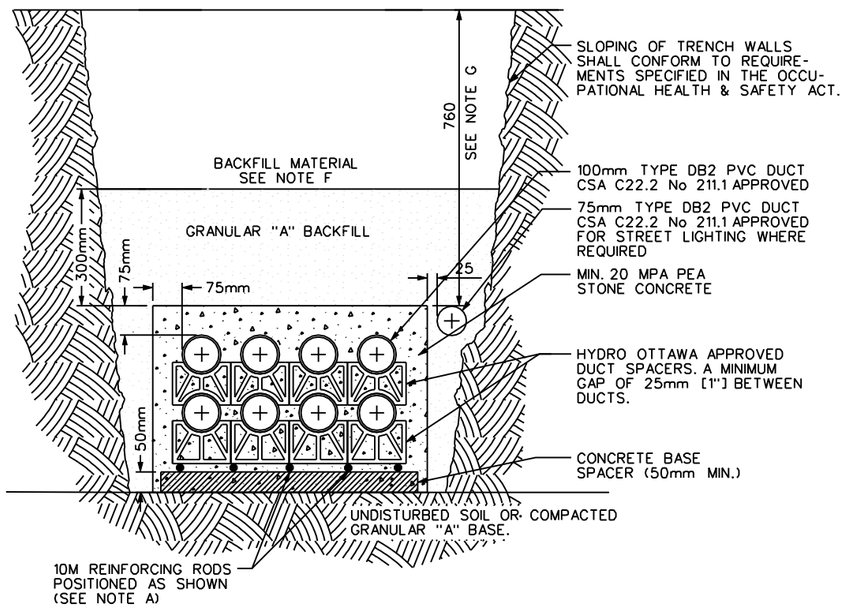

FIG 1. TYPICAL CONCRETE DUCT BANK SECTION VIEW

NOTES

A. REINFORCING RODS FULL LENGTH OF CONCRETE ENCASED DUCTS. OVERLAP JOINTS BY 150mm ON BASE SPACERS AND TIE BOTH ENDS. DRILL AND DOWEL RODS 85mm INTO WALL(S) OF CONCRETE STRUCTURE.

B. DUCT SPACERS TO BE PLACED AT A MAXIMUM OF 1500mm AND WITHIN 150mm OF COUPLING. PLASTIC DUCT SPACERS TO BE USED ONLY IF CONCRETE DUCT SPACERS ARE UNAVAILABLE.

C. FORMS REQUIRED FOR BOTH SIDES OF THE FULL LENGTH OF CONCRETE ENCASED DUCT STRUCTURE.

D. DUCTS AND TRENCHES MUST BE INSPECTED BY HYDRO OTTAWA BEFORE ANY CONCRETE IS POURED.

E. CONTRACTOR MUST ENSURE THAT ALL DUCTS ARE CLEANED, RODDED AND THAT A 8mm [3/8"] POLYPROPYLENE ROPE IS LEFT IN EACH DUCT.

F. ALL BACKFILL MATERIAL MUST BE APPROVED BY HYDRO OTTAWA INSPECTOR: FOR ACCEPTABLE BACKFILL MATERIAL, SEE HYDRO OTTAWA SPECIFICATION DOCUMENT GCS0005 SECTION 6.1.5.

G. STEEL PLATES ARE TO BE USED IF THE COVER OVER THE DUCT BANK IS LESS THAN 450MM. THE PLATES ARE TO BE 6.5MM [1/4"] IN THICKNESS AND THE WIDTH OF THE DUCT BANK BEING COVERED. ANY DIVEATION FROM THE STANDARD COVER OF 760MM MUST BE APPROVED BY THE HYDRO OTTAWA INSPECTOR.

H. BELL END TERMINATORS ARE TO BE USED WHEN TERMINATING DUCTS IN STRUCTURES.

I. ALL MEASUREMENTS ARE IN MILLIMETERS UNLESS OTHERWISE NOTED.

CONCRETE DUCT BANK SECTIONS

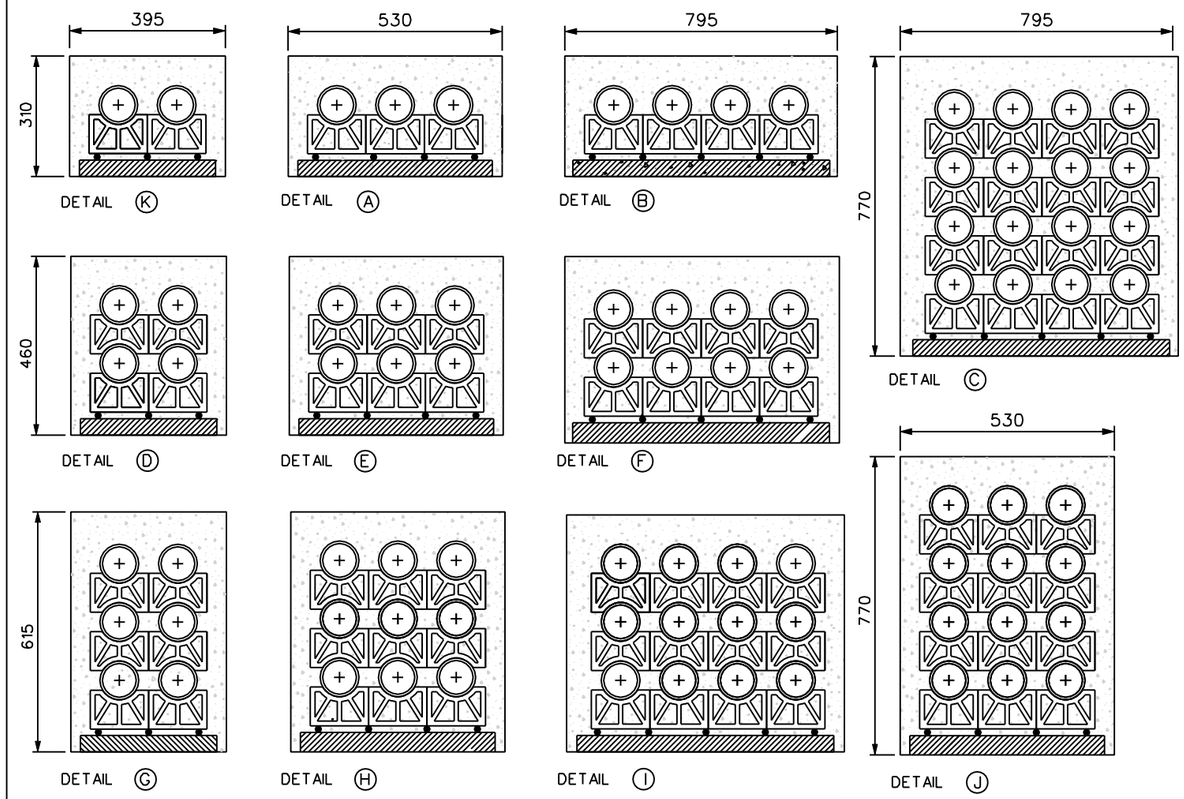

CONCRETE DUCT BANK ELEVATION

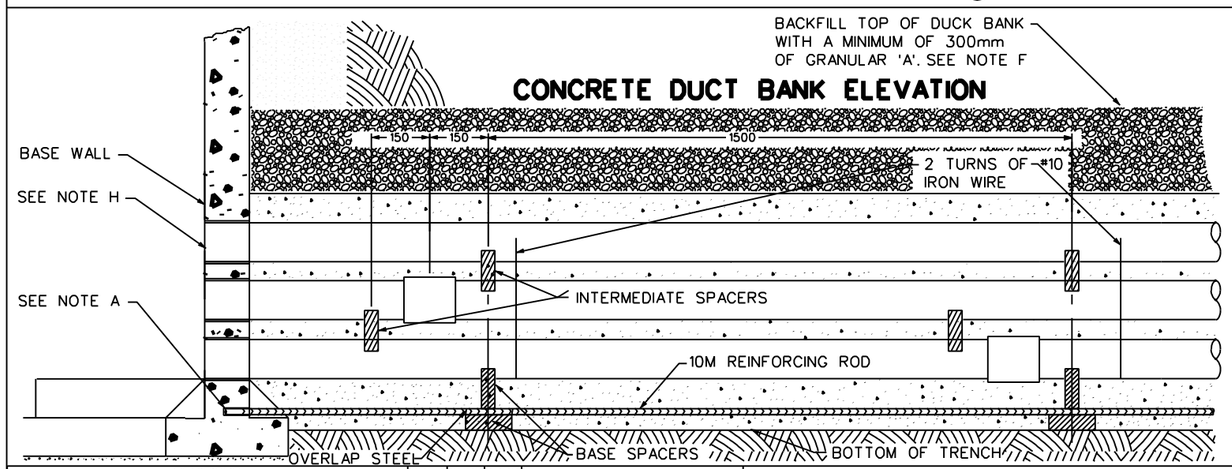

REVISIONS	PREP	CHKD	APPD
REV: 7 DATE: 2007-12-04 CHANGE: UPDATED DETAILS C,D,E,F,G ADDED DETAILS H, I, J	CP	CP	CSM
REV: 8 DATE: 2008-06-11 CHANGE: UPDATED DETAILS C,D,E,F,G ADDED DETAILS H, I, J	CP	CP	CSM
REV: 9 DATE: 2010-05-15 CHANGE: TITLE CHANGE	FB	RW	CSM

HydroOttawa
WWW.HYDRO-OTTAWA.COM

PREP: G. GOFORTH
CHKD: C. PROULX
APPD: C. MALONE P.Eng.
DATE: 2002-02-08
SCALE: N.T.S. @ ANSIB

TITLE
ENGINEERING SPECIFICATION
DUCT CONCRETE CROSS SECTIONS
CONSTRUCTION DETAIL

NO: UDS0001 | 1 OF 1 | REV: 9

5/19/2010 2:13:35 PM K:\STANDARDS\U-Underground\D-ducts,trenching\UDS0001 R9-Duct Concrete Cross Sections.dgn

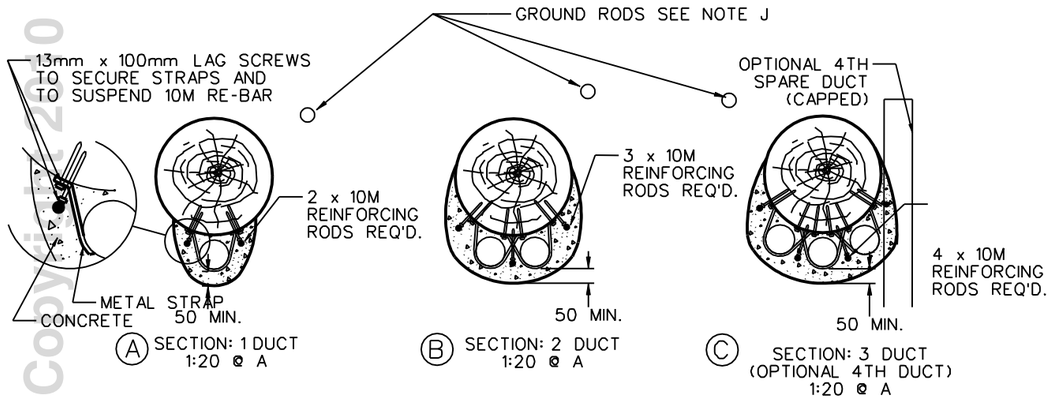

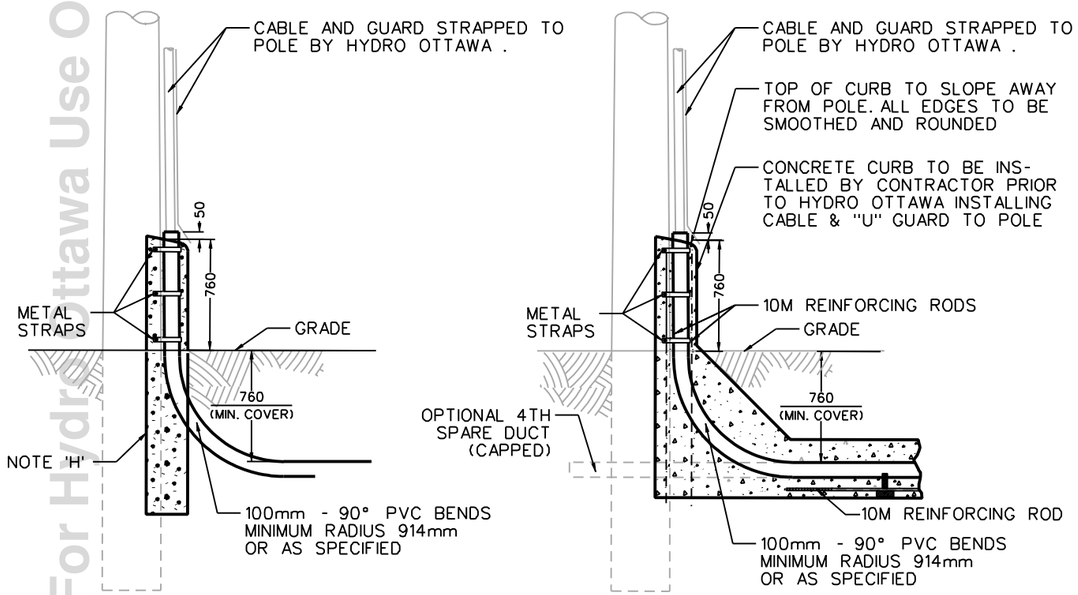

NOTES

A. CONCRETE - 20 MPa. (SEE GCS0005 SECTION 7.0 FOR MATERIAL SPECIFICATIONS), CONCRETE TO BE VIBRATED.

B. FOR REBUILT POLE LATERAL, NEW CONCRETE SHALL BE DOWELED TO EXISTING CONCRETE.

C. SPACE BETWEEN DUCTS MAY VARY DEPENDING ON SITE AND POLE CONDITIONS.

D. EXACT LOCATION OF RISER ON POLE TO BE DETERMINED BY HYDRO OTTAWA IN THE FIELD.

E. N.I.U. DUCTS TO BE CAPPED AND SECURED BY MECHANICAL MEANS.

F. CONCRETE CURBS TO BE FORMED USING SONO TUBE AND STRIPPED ONCE CONCRETE IS CURED.

G. ALL MEASUREMENTS IN MILLIMETERS UNLESS OTHERWISE INDICATED.

H. ALL PRIMARY LATERALS TO BE CONCRETE ENCASED. SECONDARY LATERALS TO BE CONCRETE ENCASED IN DAMAGE PRONE AREAS AS DIRECTED BY HYDRO OTTAWA.

I. DUCTS AND TRENCHES MUST BE INSPECTED BY HYDRO OTTAWA BEFORE ANY CONCRETE IS POURED.

J. WHERE SPECIFIED, GROUND RODS TO BE INSTALLED AS PER OGS0001.

REVISIONS	PREP	CHKD	APPD
REV: 5 DATE: 2008-09-30 CHANGE: REF TO UKS0200 REMOVED	CP	CP	CSM
REV: 6 DATE: 2009-02-24 CHANGE: NOTE I AND J ADDED RE-DRAWN	CP	CP	CSM
REV: 7 DATE: 2010-06-15 CHANGE: TITLE CHANGE. NOTE K, NOW NOTE G.	FB	RW	CSM

HydroOttawa
WWW.HYDRO-OTTAWA.COM

PREP: G. MOLNAR
CHKD: C. PROULX
APPD: C. MALONE P.Eng.
DATE: 2007-05-08
SCALE: N.T.S. @ ANSIB

TITLE
ENGINEERING SPECIFICATION
DUCT POLE LATERAL FOR WOOD POLE
CONSTRUCTION DETAIL

NO: UDS0023 | 1 OF 1 | REV: 7

PART 1 GENERAL

1.1 RELATED SECTIONS

.1 Section 03 33 00 – Cast-In-Place Concrete

1.2 REFERENCES

.1 American Society for Testing and Materials International (ASTM)
- .1 ASTM A 82/A 82M-05a, Standard Specification for Steel Wire, Plain, for Concrete Reinforcement.
- .2 ASTM A 185/A 185M-05a, Standard Specification for Steel Welded Wire Reinforcement, Plain, for Concrete.
- .3 ASTM D 1056-00, Standard Specification for Flexible Cellular Materials - Sponge or Expanded Rubber.

.2 Canadian Standards Association (CSA International)
- .1 CAN/CSA-A3000-03(R2005), Cementitious Materials Compendium (Consists of A3001, A3002, A3003, A3004 and A3005).
- .2 CSA-A3001-03, Cementitious Materials for Use in Concrete.
- .3 CSA A23.1/A23.2-04, Concrete Materials and Methods of Concrete Construction/Methods of Test and Standard Practices for Concrete.
- .4 CAN/CSA-G30.18-M92(R2002), Billet-Steel Bars for Concrete Reinforcement.
- .5 CSA C22.2 No. 211.1-06, Rigid Types EBI and DB2/ES2 PVC Conduit.

1.3 SUBMITTALS

.1 Provide submittals for pre-case concrete products in accordance with Section 01 33 00 - Submittal Procedures.

.2 Product Data:
- .1 Submit manufacturer's printed product literature, specifications and datasheet and include product characteristics, performance criteria, physical size, finish and limitations.

.3 Shop Drawings:
- .1 Submit shop drawings for precast transformer vaults.

.4 Quality assurance submittals: submit following in accordance with Section 01 45 00 - Quality Control.
- .1 Test reports: submit certified test reports for specified materials from approved independent testing laboratories, indicating compliance with specifications for specified performance characteristics and physical properties.
- .2 Certificates: submit certificates signed by manufacturer certifying that materials comply with specified performance characteristics and physical properties.

.5 Manufacturer's Instructions: submit manufacturer's installation instructions and special handling criteria, installation sequence and cleaning procedures.

PART 2 PRODUCTS

2.1 DIRECT BURIAL AND CONCRETE ENCASED PVC DUCT DUCTS AND FITTINGS

.1 All PVC ducts to be type EB1 rigid heavy wall, unless otherwise indicated on the drawings.

.2 Rigid PVC bends, couplings, reducers, bell end fittings, plugs, caps, adaptors same product material as duct, to make complete installation.

.3 Rigid PVC 90 degrees and 45 degrees bends.

.4 Rigid PVC 5 degrees angle couplings.

.5 Expansion joints every as required.

.6 Rigid PVC split ducts.

2.2 CABLE PULLING EQUIPMENT

.1 Pulling iron: galvanized steel rods, size and shape as indicated.

.2 Pull rope: 6 mm stranded nylon or polypropylene, tensile strength 5 kN, continuous throughout each duct run with 3m spare rope at each end.

2.3 MARKERS

.1 Concrete type cable markers: 600 x 600 x 100 mm, with words: "Cable", "Joint", "Conduit" impressed in top surface, with arrows to indicate change in direction of duct runs.

PART 3 EXECUTION

3.1 MANUFACTURER'S INSTRUCTIONS

.1 Compliance: comply with manufacturer's written recommendations or specifications, including product technical bulletins, handling, storage and installation instructions, and datasheets.

3.2 INSTALLATION GENERAL

.1 Install underground duct banks including formwork.

.2 Build on undisturbed soil or on well compacted granular fill not less than 150 mm thick, compacted to 95% of maximum proctor dry density.

.3 Open trench completely between manholes before ducts are laid and ensure that no obstructions will necessitate change in grade of ducts.

.4 Prior to laying ducts, if necessary to suit soil conditions construct "mud slab" not less than 75 mm thick.

.5 Install ducts at elevations and with slope as indicated and minimum slope of 1 to 400.

.6 Install base spacers at maximum intervals of 1.5 m levelled to grades indicated for bottom layer of ducts.

.7 Lay PVC ducts with configuration and reinforcing as indicated with rigid plastic intermediate spacers to maintain spacing between ducts at not less than 75 mm horizontally and 50mm vertically.
- .1 Stagger joints in adjacent layers at least 150 mm and make joints watertight.
- .2 Encase duct bank with minimum 75 mm thick concrete cover.
- .3 Transition above grade to galvanized steel or electric metallic tubing above finished grade level as indicated on the drawings.

.8 In areas of congestion, hand dig trenches to avoid damage to existing utilities.

.9 Supply and install underground concrete encased duct banks for conductors and/or cables indicated.

.10 Duct banks shall follow general route shown on the drawings and shall terminate at specified locations. Exact location of duct banks and terminating points shall be verified on site prior to commencement of work.

.11 Duct banks shall consist of paralleled ducts encased in concrete. The number and arrangement of ducts shall be as shown on the drawing.

.12 Make transpositions, offsets and changes in direction using 5 degree bend sections, do not exceed a total of 20 degree with duct offset.

.13 Use bell ends at duct terminations in manholes or buildings.

.14 Use conduit to duct adapters when connecting to conduits.

.15 Terminate duct runs with duct coupling set flush with end of concrete envelope when dead ending duct bank for future extension.

.16 Cut, ream and taper end of ducts in field in accordance with manufacturer's recommendations, so that duct ends are fully equal to factory-made ends.

.17 Allow concrete to attain 50% of its specified strength before backfilling.

.18 Use anchors, ties and trench jacks as required to secure ducts and prevent moving during placing of concrete.
- .1 Tie ducts to spacers with twine or other non-metallic material.
- .2 Remove weights or wood braces before concrete has set and fill voids.

.19 Clean ducts before laying:
- .1 Cap ends of ducts during construction and after installation to prevent entrance of foreign materials.

.20 Duct cleaning:
- .1 Pull 300mm long x diameter 6 mm less than internal diameter of duct steel or wooden mandrel through each duct, immediately after placing of concrete.
- .2 Then pull stiff bristle brush through duct; avoid disturbing or damaging ducts where concrete has not set completely.
- .3 Pull stiff bristle brush through each duct immediately before pulling-in cables.

.21 Install four 3000 mm (10’) lengths of 15M reinforcing rods, one in each corner of duct bank when connecting duct to buildings. Wire rods to 15M dowels at building and support from duct spacers. Protect existing cables and equipment when breaking into existing buildings. Place concrete down

sides of duct bank filling space under and around ducts. Rod concrete with flat bar between vertical rows filling voids.

.22 Install pull rope continuous throughout each duct run with 3m spare rope at each end.

.23 Provide electrical warning tape 300 mm (12") below finished grade spanning the width of the duct bank.

3.3 MARKERS

.1 Mark location of straight duct runs under hard surfaced areas every 45 m (150') directly over run.

.2 Mark location of duct runs under hard surfaced areas not terminating in manhole with railway spike driven flush in edge of pavement, directly over run. Place concrete duct marker at ends of such duct runs. Construct markers and install flush with grade.

.3 Mark ducts at every change in direction.

.4 Lay concrete markers flat and centered over duct with top 25 mm above earth surface.

.5 Provide drawings showing locations of markers.

3.4 FIELD QUALITY CONTROL

.1 Site Tests/Inspections:
- .1 Advise Engineer so that he/she may inspect ducts prior to placing and be present during the placement of concrete and clean out.
- .2 Coordinate all approvals and inspection with the local ESA field inspector (AHJ) prior to pouring concrete and backfilling trench.

3.5 RECORD SURVEY

.1 Survey all duct banks and pull pits prior to backfilling.

.2 Include on the survey the following information with co-ordinates tie into the UTM:
- .1 Centre line of each duct bank run.
- .2 Width of duct bank.
- .3 Top elevation of duct bank.
- .4 Location and elevation of each junction box.

3.6 CLEANING

.1 Proceed in accordance with Section 01 74 11 - Cleaning.

.2 On completion and verification of performance of installation, remove surplus materials, excess materials, rubbish, tools and equipment.

END OF SECTION

PART 1 GENERAL

1.1 RELATED REQUIREMENTS

.1 Section 26 05 00 – Common Work Results Electrical

.2 Section 26 05 32 – Conduits and Fittings

1.2 PRODUCT DATA

.1 Provide product data in accordance with Section 01 33 00 - Submittal Procedures

PART 2 PRODUCTS

2.1 BUILDING WIRES

.1 Conductors: stranded for 10 AWG and larger. Minimum size: 12 AWG.

.2 120V Control circuits are permitted to be #14AWG Copper.

.3 Copper conductors: size as indicated, with 600V insulation of cross-linked thermosetting polyethylene material rated RW90 XLPE RWU90 XLPE where used underground or in floor slabs, both Jacketted.

.4 Type TWU, TWH, T90 Nylon not permitted.

2.2 TECK 90 CABLE

.1 Cable: in accordance with Section 26 05 00 - Common Work Results for Electrical.

.2 Conductors:
- .1 Grounding conductor: copper, size as indicated.
- .2 Circuit conductors: copper, size as indicated.

.3 Insulation:
- .1 Cross-linked polyethylene XLPE.
- .2 Rating: 600V.

.4 Inner jacket: polyvinyl chloride material.

.5 Armour: interlocking

.6 Overall covering: thermoplastic polyvinyl chloride, meeting requirements of UL Vertical Tray Fire Test FT4 with maximum flame travel of 1220mm (48”)

.7 Fastenings:
- .1 One hole steel or zinc straps to secure surface cables 50 mm and smaller. Two hole steel straps for cables larger than 50 mm.
- .2 Channel type supports for two or more cables spaced at intervals required by OESC Code
- .3 Threaded rods: 12 mm diameter to support suspended channels.

.8 Connectors:
- .1 Watertight, approved for TECK cable.

2.3 VFD RATED CABLE

.1 Conductors: shall be annealed stranded tinned copper per ASTM B3, B8 and B33, insulation rated for 90 Degrees C, Wet/Dry operating temperature, size as indicated, CSA Approved.

.2 Insulation: Thickness shall have a minimum average wall thickness of 30mils. The insulation material shall be XLPE with a XHHW-2 listing per UL 44. Each insulated conductor shall be identified in accordance with ICEA Method 4 Colour Coding

.3 Insulation: 1000V

2.4 ARMOURED CABLES

.1 Conductors: insulated, copper, size as indicated.

.2 Type: AC90

.3 Armour: interlocking type fabricated from galvanized steel strip.

.4 Connectors: anti short connectors.

2.5 MINERAL INSULTATED CABLES

.1 Conductors: solid bare soft-annealed copper, size as indicated.

.2 Insulation: compressed powdered magnesium oxide to form compact homogeneous mass throughout entire length of cable.

.3 Overall covering: annealed seamless copper sheath, Type M1 rated 600 V, 250°C.

.4 Overall jacket: PVC applied over the sheath and compliant to applicable Building Code classification for this project for direct buried and wet locations, as required.

.5 Two hour fire rating.

.6 Support and routing: steel support channel with clamps or threaded rod and tray, concealed routing coordinated on-site to suit coordination with all services.

.7 Connectors: watertight, field installed, approved for MI cable.

.8 Termination kits: field installed brass plates and accessories as required by approved manufacturers MI cable installation requirements.

2.6 CONTROL CABLES

.1 Type: LVT: 2, 4, 6 or 8 soft annealed copper conductors, sized as indicated:
  .1 Insulation: thermoplastic.
  .2 Sheath : cotton braid

2.7 NON-METALLIC SHEATHED CABLE

.1 Shall not be used on this project.

PART 3 EXECUTION

3.1 FIELD QUALITY CONTROL

.1 Perform tests in accordance with Section 26 05 00 - Common Work Results for Electrical.

.2 Perform insulation tests before energizing electrical system.

3.2 GENERAL CABLE INSTALLATION

.1 Terminate cables in accordance with Section 26 05 21 - Wire and Box Connectors - (0-1000 V).

.2 Cable Colour Coding: to Section 26 05 00 Common Work Results for Electrical.

.3 Conductor length for parallel feeders to be identical.

.4 Lace or clip groups of feeder cables at distribution centres, pull boxes, and termination points.

.5 Wiring in walls: typically drop or loop vertically from above to better facilitate future renovations. Generally wiring from below and horizontal wiring in walls to be avoided unless indicated.

.6 Branch circuit wiring for surge suppression receptacles and permanently wired computer and electronic equipment to be 2-wire circuits only, i.e. common neutrals not permitted.

.7 Provide numbered wire collars for control wiring. Numbers to correspond to control shop drawing legend. Obtain wiring diagram for control wiring.

3.3 INSTALLATION OF BUILDING WIRES

.1 Install wiring as follows:
- .1 In conduit systems in accordance with Section 26 05 34 - Conduits, Conduit Fastenings and Conduit Fittings.
- .2 In surface and lighting fixture raceways in accordance with Section 26 50 00, 26 05 34

3.4 INSTALLATION OF TECK90 CABLE (0 -1000 V)

.1 Group cables wherever possible on channels.

.2 Not to be installed in lengths greater than 6’ unless with the written permission of the Consultant.

3.5 INSTALLATION OF VFD RATED CABLE

.1 Install VFD Rated cable on line and load sides of all VFDs and reactors where possible

3.6 INSTALLATION OF ARMOURED CABLES

.1 Group cables wherever possible on channels.

.2 Type AC90 is only to be used in extremely short lengths (of 10’ or less) and are only to be used for fixture drops from conduit boxes.

.3 AC90 is never to be used for home runs for lighting or power devices and will be ordered to be removed if so installed.

.4 Use AC90 for this purpose only and only where specifically called out on the drawings.

3.7 INSTALLATION OF CONTROL CABLES

.1 Install control cables in conduit from cable tray to devices

.2 Install control cables in cable tray

.3 Ground control cable shield.

3.8 INSTALLATION OF NON-METALLIC SHEATHED CABLE

.1 Never use Non Metallic Sheathed Cable.

END OF SECTION

PART 1 GENERAL

1.1 RELATED SECTIONS

.1 Section 26 05 01 - Common Work Results - Electrical.

.2 Section 26 28 20 – Class A GFIs.

1.2 REFERENCES

.1 Canadian Standards Association, (CSA International)

PART 2 PRODUCTS

2.1 EQUIPMENT

.1 Copper conductor: bare, soft annealed, stranded, untinned copper ground conductor for system and equipment ground, size as indicated, minimum as dictated by code.

.2 Rod electrodes: copper clad steel 19 mm dia by 3 m long, minimum.

.3 Grounding conductors: bare stranded copper, untinned, soft annealed, minimum 3/0 AWG copper conductor to each ground electrode.

.4 Insulated grounding conductors: green, type TWH or TWU, where indicated.

.5 Ground bus: copper, size as indicated, complete with 600V insulated supports, fastenings, connectors.

.6 Supply non-corroding accessories necessary for grounding system, type, size, material as indicated, including but not necessarily limited to:
- .1 Grounding and bonding bushings.
- .2 Protective type clamps.
- .3 Bolted type conductor connectors.
- .4 Thermit welded type conductor connectors.
- .5 Bonding jumpers, straps.
- .6 Pressure wire connectors
- .7 Compression ground connectors.

.7 Compression grounding connectors used to make permanent grounding connections must be rated for direct burial, embedding in concrete and for above grade applications
- .1 Compression connectors shall be made of pure, wrought copper, meeting ASTM B187, essentially the same as the conductors being connected.
- .2 Cast connectors shall be made of copper base alloy according to ASTM B30 (latest revision).
- .3 All connectors must be of heavy duty design and must be equivalent in current carrying capacity to the maximum size copper conductors being joined while maintaining high mechanical strength and electrical integrity.
- .4 Terminals and splices may accommodate only one conductor size. All other connectors must be range taking.
- .5 All connectors must be designed to provide high integrity connections.
- .6 Connectors must be pre-filled or filled at time of connection with a corrosion inhibiting

compound which is compatible with the conductors being joined.

PART 3 EXECUTION

3.1 INSTALLATION GENERAL

.1 Install complete permanent, continuous system and equipment grounding systems including, electrodes, conductors, connectors, accessories, as indicated.

.2 Install connectors in accordance with manufacturer's instructions.

.3 Protect exposed grounding conductors from mechanical injury.

.4 Make buried connections, and connections to conductive water main, electrodes, using permanent mechanical connectors or inspectable wrought copper compression connectors to ANSI/IEEE 837.

.5 Use mechanical connectors for grounding connections to equipment provided with lugs.

.6 Soldered joints not permitted.

.7 Install bonding wire for flexible conduit, connected at [both] [one] ends to grounding bushing, solder-less lug, clamp or cup washer and screw. Neatly cleat bonding wire to exterior of flexible conduit.

.8 Install flexible ground straps for bus duct enclosure joints, where such bonding is not inherently provided with equipment.

.9 Install separate ground conductor, green TW75 insulation to outdoor lighting standards.

.10 Connect building structural steel and metal siding to ground by welding copper to steel.

.11 Bond single conductor, metallic armoured cables to cabinet at supply end, provide non-metallic entry plate at load end.

.12 Ground secondary service pedestals.

.13 Ensure uniformity of grounding practices throughout installation.

3.2 ELECTRODES

.1 Install concrete encased electrodes in building foundation footings, with terminal connected to grounding network.

.2 Install rod electrodes and make grounding connections.

.3 Bond separate, multiple electrodes together.

.4 Use size 3/0 AWG copper conductors for connections to electrodes.

3.3 SYSTEM AND CIRCUIT GROUNDING

.1 Install system and circuit grounding connections to the neutrals of the electrical distribution system and backup generation system for separate ground fault detection, as indicated.

3.4 EQUIPMENT GROUNDING

.1 Install grounding connections to typical equipment included in, but not necessarily limited to following list. Service equipment, transformers, switchgear, duct systems, cable trays, frames of motors, motor control centres, starters, control panels, building steel work, generators, elevators, distribution panels, outdoor lighting.

3.5 GROUNDING BUS

.1 Install copper grounding bus mounted on insulated supports on wall in electrical or IT rooms, as indicated.

.2 Ground items of electrical equipment in electrical room to ground bus with individual bare stranded copper connections size 2/0AWG.

3.6 COMMUNICATION SYSTEMS

.1 Install grounding connections for telephone, fire alarm, intercommunication systems as follows:
- .1 Telephones: make telephone grounding system in accordance with telephone company's requirements.
- .2 Sound, fire alarm, and intercommunication systems as required.

3.7 FIELD QUALITY CONTROL

.1 Perform tests in accordance with Section 26 05 00 - Common Work Results - Electrical.

.2 Perform ground continuity and resistance tests using method appropriate to site conditions and to approval of Consultant and local authority having jurisdiction over installation.

.3 Perform tests before energizing electrical system.

.4 Disconnect ground fault indicator during tests.

END OF SECTION

PART 1 GENERAL

1.1 WASTE MANAGEMENT AND DISPOSAL

.1 Separate and recycle waste materials in accordance with Section 01 74 19 - Waste Management and Disposal

.2 Remove from site and dispose of all packaging materials at appropriate recycling facilities.

.3 Collect and separate for disposal paper, plastic, polystyrene, corrugated cardboard packaging material in appropriate on-site bins for recycling in accordance with Waste Management Plan.

.4 Fold up metal banding, flatten and place in designated area for recycling.

PART 2 PRODUCTS

2.1 SUPPORT CHANNELS

.1 U shape, size 41 x 41mm (1 5/8”), 2.5 mm thick, surface mounted, suspended by ½” Threaded Rod or embedded in concrete as required

.2 Galvanized Steel used indoors

.3 Stainless Steel where required outdoors

PART 3 EXECUTION

3.1 INSTALLATION

.1 Secure equipment to hollow or solid masonry, tile and plaster surfaces with lead anchors or nylon shields.

.2 Secure equipment to poured concrete with expandable inserts.

.3 Secure equipment to hollow masonry walls or suspended ceilings with toggle bolts.

.4 Secure surface mounted equipment with twist clip fasteners to inverted T bar ceilings. Ensure that T bars are adequately supported to carry weight of equipment specified before installation.

.5 Support equipment, conduit or cables using clips, spring loaded bolts, cable clamps designed as accessories to basic channel members.

.6 Fasten exposed conduit or cables to building construction or support system using straps.
- .1 One-hole steel straps to secure surface conduits and cables 50 mm and smaller.
- .2 Two-hole steel straps for conduits and cables larger than 50 mm.
- .3 Beam clamps to secure conduit to exposed steel work.

.7 Suspended support systems.
- .1 Support individual cable or conduit runs with 12 mm dia threaded rods and spring clips.
- .2 Support 2 or more cables or conduits on channels supported by 12 mm dia threaded rod hangers where direct fastening to building construction is impractical.

.8 Provide metal brackets, frames, hangers, clamps and related types of support structures where indicated or as required to support conduit and cable runs.

.9 Ensure adequate support for raceways and cables dropped vertically to equipment where there is no wall support.

.10 Do not use wire lashing or perforated strap to support or secure raceways or cables.

.11 Do not use supports or equipment installed for other trades for conduit or cable support except with permission of other trade and approval of Consultant

.12 Install fastenings and supports as required for each type of equipment cables and conduits, and in accordance with manufacturer's installation recommendations.

.13 Where cutting of galvanized strut is required, touch up the cut ends with galvanizing paint.

END OF SECTION

PART 1 GENENERAL

1.1 RELATED SECTIONS

.1 Section 26 05 34 - Conduits, Conduit Fastenings and Conduit Fittings.

1.2 REFERENCES

.1 Canadian Standards Association (CSA International)
  .1 OESC 25th Edition - CSA C22.1-12, Canadian Electrical Code, Part 1 (22nd edition) Safety Standard for Electrical Installations and Ontario Ammendments to that Code.

1.3 SUBMITTALS

.1 Provide submittals in accordance with Section 01 33 00 - Submittal Procedures

.2 Product Data:
  .1 Provide manufacturer's printed product literature, specifications and datasheet and include product characteristics, performance criteria, physical size, finish and limitations.

.3 Provide shop drawings: in accordance with Section 01 33 00 - Submittal Procedures.

PART 2 PRODUCTS

2.1 SPLITTERS

.1 Construction: sheet metal enclosure, welded corners and formed hinged cover suitable for locking in closed position.

.2 Terminations: main and branch lugs or connection blocks to match required size and number of incoming and outgoing conductors as indicated.

.3 Spare Terminals: minimum three spare terminals or lugs on each connection or lug block sized less than 400 A.

2.2 JUNCTION AND PULL BOXES

.1 Construction: welded steel enclosure.

.2 Covers Flush Mounted: 25 mm minimum extension all around.

.3 Covers Surface Mounted: screw-on flat turned edge covers.

2.3 CABINETS

.1 Construction: welded sheet steel, hinged door, handle, latch and catch

.2 Type E Empty: flush overlapping sides mounting as required.

.3 Type T Terminal: flush overlapping sides mounting as required containing 19 mm G1S plywood backboard.

PART 3 EXECUTION

3.1 SPLITTER INSTALLATION

.1 Mount plumb, true and square to building lines.

.2 Extend splitters full length of equipment arrangement except where indicated otherwise.

3.2 JUNCTION, PULL BOXES AND CABINETS INSTALLATION

.1 Install pull boxes in inconspicuous but accessible locations.

.2 Mount cabinets with top not higher than 2 m above finished floor except where indicated otherwise.

.3 Install terminal block as indicated in Type T cabinets.

.4 Coordinate all main junction and pull boxes to suit conduit runs and wire sizes are indicated. Install additional pull boxes as required by CSA C22.1.

3.3 IDENTIFICATION

.1 Equipment Identification: to Section 26 05 00- Common Work Results for Electrical

.2 Identification Labels: size 2 indicating system name voltage and phase.

END OF SECTION

PART 1 GENERAL

1.1 LOCATION OF CONDUITS

.1 Drawings do not show all conduits. Those shown are in diagrammatic form only

1.2 REFERENCES

.1 Canadian Standards Association (CSA International)
  .1 CSA C22.1-12, Ontario Electrical Safety Code, Part 1

1.3 ACTION AND INFORMATIONAL SUBMITTALS

.1 Provide submittals in accordance with Section 01 33 00 - Submittal Procedures.

1.4 DELIVERY, STORAGE AND HANDLING

.1 Deliver, store and handle materials in accordance with Section 01 61 00 - Common Product Requirements.

PART 2 PRODUCTS

2.1 CONDUIT

.1 Rigid PVC Conduit (RPVC)

.2 Rigid PVC Conduit Type DB2 (DB2)

.3 Rigid Galvanized Steel Conduit (RGSC)

.4 Electrical Metallic Tubing (EMT)

.5 Electrical Non-Metallic Tubing (ENMT)

.6 Flexible Metal Conduit and Liquidtight Flexible Metal Conduit

2.2 OUTLET AND CONDUIT BOXES GENERAL

.1 Size boxes in accordance with CSA C22.1.

.2 102 mm square or larger outlet boxes as required.

.3 Gang boxes where wiring devices are grouped.

.4 Blank cover plates for boxes without wiring devices.

.5 347 V outlet boxes for all 347 V line voltage switching devices.

.6 Combination boxes with barriers where outlets for more than one system are grouped.

.7 Standard of Acceptance: Iberville, Hubbell or equal Canadian manufactured and CSA certified product.

2.3 GALVANIZED STEEL OUTLET BOXES

.1 One-piece electro-galvanized construction.

.2 Single and multi gang flush device boxes for flush installation, minimum size 76 x 50 x 38 mm or as indicated. 102 mm square outlet boxes when more than one conduit enters one side with extension and plaster rings as required.

.3 Utility boxes for outlets connected to surface-mounted EMT conduit, minimum size 102 x 54 x 48 mm.

.4 102 mm square or octagonal outlet boxes for lighting fixture outlets.

.5 Extension and plaster rings for flush mounting devices in finished plaster and tile walls.

.6 Standard of Acceptance: Iberville, Hubbell or equal Canadian manufactured and CSA certified product.

2.4 MASONRY BOXES

.1 Electro-galvanized steel masonry single and multi gang boxes for devices flush mounted in exposed block walls.

2.5 CONCRETE BOXES

.1 Electro-galvanized sheet steel concrete type boxes for flush mount in concrete with matching extension and plaster rings as required.

2.6 FLOOR BOXES

.1 Refer to Electrical Schedules for Types of Floorbox complete with manufacturer and insert requirements.

.2 Standard of Acceptance: As noted in Electrical Equipment Schedule or equal/alternate product approved by the Consultant.

2.7 CONDUIT BOXES

.1 Cast FS aluminum boxes with factory-threaded hubs and mounting feet for surface wiring of devices.

.2 Standard of Acceptance: Iberville, Hubbell or equal Canadian manufactured and CSA certified product.

2.8 PULSTRINGS

.1 Polypropylene nylon, 6mm (1/4”) for conduits to 1”

.2 Braided Nylon, 12mm (1/2”) for conduits to 4”.

2.9 FITTINGS - GENERAL

.1 Bushing and connectors with nylon insulated throats.

.2 Knock-out fillers to prevent entry of debris.

.3 Conduit outlet bodies for conduit up to 35mm and pull boxes for larger conduits.

.4 Double locknuts and insulated bushings on sheet metal boxes.

PART 3 EXECUTION

3.1 INSTALLATION

.1 Support boxes independently of connecting conduits.

.2 Fill boxes with paper, sponges or foam or similar approved material to prevent entry of debris during construction. Remove upon completion of work.

.3 For flush installations mount outlets flush with finished wall using plaster rings to permit wall finish to come within 6 mm of opening.

.4 Provide correct size of openings in boxes for conduit, mineral insulated and armoured cable connections. Do not install reducing washers.

.5 Vacuum clean interior of outlet boxes before installation of wiring devices.

.6 Identify systems for outlet boxes as required.

.7 Conceal conduit in walls, partitions and ceilings. Provide access panels in areas where access is required to junction boxes.

.8 Install EMT surface mounted in mechanical, electrical telecommunications rooms and the overhead link.

.9 Install Rigid Galvanized Conduit where subject to mechanical injury

.10 Provide Expansion Fittings where conduits pass over expansion joints.

.11 Seal conduits passing through an outside wall with duct seal a the closest outlet box on the outside wall. If the distance from the nearest outlet box to point where conduit passes through wall exceeds 1524mm (5',) install and outlet box just inside the wall and seal conduit at that location. Install duct seal after all wiring has been completed.

.12 Install rigid galvanized steel conduit 762mm (30") below finished grade and extend 75mm (3") beyond the outside wall surface where conduit runs pass through the foundation walls. Couple to rigid PVC conduit for continuation of underground electrical or telecommunication service to outdoor locations.

.13 Do not use perforated steel supports (all round)

.14 Make exposed conduit parallel to the building lines to present a neat and tidy appearance. Make offsets at similar locations and parallel in areas where two or more runs are together. Failure to coordinate conduit runs with each other will result in the Consultant rejecting the installation.

.15 Use liquidtight flexible conduit for final connections to motors and loads subject to vibration.

.16 Run conduit to avoid proximity to water or heating pipes. Do not run within 75mm of pipes, and where unavoidable, contact Consultant for direction. Proceed with direction from Consultant.

.17 Lengths of Flexible Metallic Conduit are not permitted to be longer than 6’ unless prior permission has been obtained from the Consultant, under documented writing.

.18 Type AC90 has very limited use, refer to Section 26 05 21.

END OF SECTION

PART 1 GENERAL

1.1 RELATED REQUIREMENTS

.1 Section 26 05 21 – Wires and Cables

.2 Section 26 05 29 – Hangars and Supports

.3 Section 26 05 32 – Outlet Boxes, Conduits and Fittings

1.2 REFERENCES

.1 Canadian Standards Association (CSA International)
- .1 CAN/CSA C22.2 No. 18-98(R2003), Outlet Boxes, Conduit Boxes, Fittings and Associated Hardware, A National Standard of Canada.
- .2 CSA C22.2 No. 45-M1981(R2003), Rigid Metal Conduit.
- .3 CSA C22.2 No. 56-04, Flexible Metal Conduit and Liquid-Tight Flexible Metal Conduit.
- .4 CSA C22.2 No. 83-M1985(R2003), Electrical Metallic Tubing.
- .5 CSA C22.2 No. 211.2-M1984(R2003), Rigid PVC (Unplasticized) Conduit.
- .6 CAN/CSA C22.2 No. 227.3-05, Nonmetallic Mechanical Protection Tubing (NMPT), A National Standard of Canada (February 2006).

1.3 ACTION AND INFORMATIONAL SUBMITTALS

.1 Provide submittals in accordance with Section 01 33 00 - Submittal Procedures.

.2 Product data: submit manufacturer's printed product literature, specifications and datasheets.
- .1 Submit cable manufacturing data.

.3 Quality assurance submittals:
- .1 Test reports: submit certified test reports.
- .2 Certificates: submit certificates signed by manufacturer certifying that materials comply with specified performance characteristics and physical properties.
- .3 Instructions: submit manufacturer's installation instructions.

1.4 WASTE MANAGEMENT AND DISPOSAL

.1 Separate waste materials for reuse and recycling in accordance with Section 01 74 19 - Waste Management and Disposal.

.2 Place materials defined as hazardous or toxic waste in designated containers.

.3 Ensure emptied containers are sealed and stored safely for disposal away from children.

PART 2 PRODUCTS

2.1 CABLES AND REELS

.1 Provide cables on reels or coils.
- .1 Mark or tag each cable and outside of each reel or coil, to indicate cable length, voltage rating, conductor size, and manufacturer's lot number and reel number.

.2 Each coil or reel of cable to contain only one continuous cable without splices.

.3 Identify cables for exclusively dc applications.

.4 Reel and mark shielded cables rated 2,001 volts and above.

2.2 CONDUITS

.1 Rigid metal conduit: to CSA C22.2 No. 45, galvanized steel threaded.

.2 Epoxy coated conduit: to CSA C22.2 No. 45, with zinc coating and corrosion resistant epoxy finish inside and outside.

.3 Electrical metallic tubing (EMT): to CSA C22.2 No. 83, with couplings.

.4 Rigid PVC conduit: to CSA C22.2 No. 211.2.

.5 Flexible metal conduit: to CSA C22.2 No. 56, steel, liquid-tight flexible metal.

.6 Flexible PVC conduit: to CAN/CSA-C22.2 No. 227.3.

2.3 CONDUIT FASTENINGS

.1 One hole steel straps to secure surface conduits NPS 2” (50 mm) and smaller.
  .1 Two hole steel straps for conduits larger than NPS 2” 50 mm.

.2 Beam clamps to secure conduits to exposed steel work.

.3 Channel type supports for two or more conduits at maximum length permitted for smallest conduit on rack by code.

.4 Threaded rods, 12 mm diameter, to support suspended channels.

2.4 CONDUIT FITTINGS

.1 Fittings: to CAN/CSA C22.2 No. 18, manufactured for use with conduit specified. Coating: same as conduit.

.2 Ensure factory "ells" where 180 degrees bends for NPS 1” (25 mm) and larger conduits.

.3 EMT Connectors:
  .1 Watertight connectors and couplings for EMT where routed below sprinker heads, installed in location exposed to the weather or at exposed penetrations into the top of electrical equipment.
  .2 Set screw type steel connectors are acceptable where EMT conduit is routed in walls, above ceiling and/or sprinkler heads where there is no possibility of direct water stream or ingress of moisture.

2.5 EXPANSION FITTINGS FOR RIGID CONDUIT

.1 Weatherproof expansion fittings with internal bonding assembly suitable for 100mm linear expansion.

.2 Watertight expansion fittings with integral bonding jumper suitable for linear expansion and 19 mm deflection.

.3 Weatherproof expansion fittings for linear expansion at entry to panel.

PART 3 EXECUTION

3.1 MANUFACTURER'S INSTRUCTIONS

.1 Compliance: comply with manufacturer's written recommendations or specifications, including product technical bulletins, handling, storage and installation instructions, and datasheets.

3.2 INSTALLATION

.1 Install conduits to conserve headroom in exposed locations and cause minimum interference in spaces through which they pass.

.2 Conceal conduits except in mechanical and electrical service rooms and in unfinished areas.

.3 Use epoxy coated conduit underground and in corrosive areas.

.4 Use electrical metallic tubing (EMT) except in cast concrete, above 2.4 m not subject to mechanical injury.

.5 Use rigid PVC conduit underground and in corrosive areas.

.6 Use flexible metal conduit for connection to motors in dry areas, connection to recessed incandescent fixtures without prewired outlet box, connection to surface or recessed fluorescent fixtures, work in movable metal partitions.

.7 Use liquid tight flexible metal conduit for connection to motors or vibrating equipment in damp, wet or corrosive locations.

.8 Use explosion proof flexible connection for connection to explosion proof motors.

.9 Install conduit sealing fittings in hazardous areas.
.1 Fill with compound.

.10 Minimum conduit size for lighting and power circuits: NPS 1/2”, (12 mm.)

.11 Bend conduit cold:
.1 Replace conduit if kinked or flattened more than 1/10th of its original diameter.

.12 Mechanically bend steel conduit over 35 mm diameter.

.13 Field threads on rigid conduit must be of sufficient length to draw conduits up tight.

.14 No Running of Threads Permitted

.15 Install fish cord in empty conduits.

.16 Run 2-NPS 1 (25 mm) spare conduits up to ceiling space and 2-NPS 1 (25 mm) spare conduits down to ceiling space from each flush panel.
.1 Terminate these conduits in 152 x 152 x 102 mm junction boxes in ceiling space or in case of an exposed concrete slab, terminate each conduit in surface type box.

.17 Remove and replace blocked conduit sections.
.1 Do not use liquids to clean out conduits.

.18 Dry conduits out before installing wire.

.19 Use flexible metal conduit exposed only where specifically indicated on drawings or with approval of Consultant, or for final fixture tails, not longer than 10' and as above in .6.

3.3 SURFACE CONDUITS

.1 Run parallel or perpendicular to building lines.

.2 Locate conduits behind infrared or gas fired heaters with 1.5 m clearance.

.3 Run conduits in flanged portion of structural steel.

.4 Group conduits wherever possible on suspended or surface channels, where applicable

.5 Do not pass conduits through structural members except as indicated or with permission of Consultant.

.6 Do not locate conduits less than 75 mm parallel to steam or hot water lines with minimum of 25 mm at crossovers.

3.4 CONCEALED CONDUITS

.1 Run parallel or perpendicular to building lines.

.2 Do not install horizontal runs in masonry walls.

.3 Do not install conduits in terrazzo or concrete toppings.

3.5 CONDUITS IN CAST-IN-PLACE CONCRETE

.1 Locate to suit reinforcing steel.

.2 Install in centre one third of slab.

.3 Protect conduits from damage where they stub out of concrete.

.4 Install sleeves where conduits pass through slab or wall.

.5 Provide oversized sleeve for conduits passing through waterproof membrane, before membrane is installed.
  .1 Use cold mastic between sleeve and conduit.

.6 Conduits in slabs: minimum slab thickness 4 times conduit diameter.

.7 Encase conduits completely in concrete with minimum 25 mm concrete cover.

.8 Organize conduits in slab to minimize cross-overs.

3.6 CONDUITS IN CAST-IN-PLACE SLABS ON GRADE

.1 Run conduits NPS 1 (25 mm) and larger below slab and encase in 75 mm concrete envelope.
  .1 Provide 50 mm of sand over concrete envelope below floor slab.

3.7 CONDUITS UNDERGROUND

.1 Slope conduits to provide drainage.

.2 Waterproof joints (PVC excepted) with heavy coat of bituminous paint.

3.8 CLEANING

.1 Proceed in accordance with Section 01 74 11 - Cleaning.

.2 On completion and verification of performance of installation, remove surplus materials, excess materials, rubbish, tools and equipment.

END OF SECTION

PART 1 GENENERAL

1.1 RELATED SECTIONS

.1 Section 26 05 00 - Common Work Results - Electrical.

.2 Section 26 05 11 – Direct Buried and Concrete Encased Ductbanks

.3 Section 26 05 21 – Wires and Cables (0-1000V)

1.2 REFERENCES

.1 Canadian Standards Association, (CSA International)

.2 Insulated Cable Engineers Association, Inc. (ICEA)

1.3 SUBMITTALS

.1 Provide submittals in accordance with Section 01 33 00 - Submittal Procedures.

PART 2 PRODUCTS

2.1 MARKERS

.1 Concrete type cable markers: 600 x 600 x 100 mm with words: conduit impressed in top surface, with arrows to indicate change in direction of cable and duct runs.

PART 3 EXECUTION

3.1 CABLES IN UNDERGROUND DUCTS

.1 Underground cable splices not acceptable, unless prior permission has been obtained in writing from the consultant, or if shown on the drawings specifically.

.2 Minimum permitted radius at cable bends for rubber, plastic or lead covered cables, 8 times diameter of cable; for metallic armoured cables, 12 times diameter of cables or in accordance with manufacturer's instructions.

.3 Maintain 75 mm (3") minimum separation between cables of different circuits. Maintain 300 mm (12") horizontal separation between low and high voltage cables. When low voltage cables cross high voltage cables maintain 300 mm (12") vertical separation with low voltage cables in upper position. At crossover, maintain 75 mm (3") minimum vertical separation between low voltage cables and 150 mm (6") between high voltage cables. Maintain 300 mm (12") minimum lateral and vertical separation for fire alarm and control cables when crossing other cables, with fire alarm and control cables in upper position.

3.2 CABLE INSTALLATION IN DUCTS

.1 Install cables as indicated in ducts.

.2 Do not pull spliced cables inside ducts.

.3 Install multiple cables in duct simultaneously.

.4 Use CSA approved lubricants of type compatible with cable jacket to reduce pulling tension.

.5 To facilitate matching of colour coded multiconductor control cables reel off in same direction during installation.

.6 Before pulling cable into ducts and until cables are properly terminated, seal ends of lead covered cables with wiping solder; seal ends of non-leaded cables with moisture seal tape.

.7 After installation of cables, seal duct ends with duct sealing compound.

3.3 MARKERS

.1 Mark cable at standard intervals along duct runs to suit length of run and changes in direction.

.2 Mark underground splices.

.3 Where markers are removed to permit installation of additional cables, reinstall existing markers.

.4 Lay concrete markers flat and centered over cable with top flush with finish grade.

3.4 FIELD QUALITY CONTROL

.1 Perform tests in accordance with Section 26 05 00 - Common Work Results - Electrical.

.2 Perform tests using qualified personnel. Provide necessary instruments and equipment.

.3 Check phase rotation and identify each phase conductor of each feeder.

.4 Check each feeder for continuity, short circuits and grounds. Ensure resistance to ground of circuits is not less than 50 megohms(MΩ)

.5 Acceptance tests for LV cables (less than 600VAC):
- .1 After installing cable but before splicing and terminating, perform insulation resistance test with 1000 V megger on each phase conductor.
- .2 Check insulation resistance after each splice and/or termination to ensure that cable system is ready for acceptance testing.

.6 Provide Consultant with list of test results showing location at which each test was made, circuit tested and result of each test.

.7 Remove and replace entire length of cable if cable fails to meet any of test criteria.

END OF SECTION

General Instructions

1. All special programming and sequence of operations scope of work for lighting control and scenes in large open spaces and specialty control locations have been indicated on the drawings to inform the system commissioning scope of work and have been noted as such below.
2. In all typical spaces such as offices, corridors, etc. and in specialty areas where indicated; commissioning contractor to utilize light meter to validate light levels meet Owner requirements and metrics as noted below and on the drawings; confirm the preferred maximum light level with the Owner; modify AUTO ON output settings and/or dim trim limits as necessary in areas indicated with the "Auto/Program Dim" selected to ensure all Auto ON lights turn on to the pre-set dimming level to suit the Owner's operational requirements of the space and to include the ability (where indicated) to manually adjust within the pre-configured dimming range to provide maximum energy savings.

1. LIGHTING CONTROL SYSTEM OPERATION AND PROGRAMMING SCHEDULE

1. Instructions:

1. Confirm controls operate as per manufacturer's specifications; check and adjust occupancy sensor controls to suit usage of the space and to prevent un-necessary fixture cycling; check daylight switching/dimming systems and commission to suit circuiting as noted on the plans and comments in this schedule.
2. Confirm no unusual ballast/driver noise or vibration.

Room No.	Room Name	**Operational/Programming Requirements** (General Note 2)										
		Manual Switching	Manual Dimming	Auto/Program Dim	Daylight On/Off	Daylight Dimming	Occupancy	Program Scenes	Partition Sensor	Scheduled	Always On / Night Light	
Level 1												
101	Apparatus Bay	X					X					Auto ON 50%/ Auto OFF. Manual control by four way switch at wall for on to 100%.
111	Support	X										Three way switch for control from both entrances.
121	Corridor						X					Auto ON/ Auto OFF
122	Dispatch	X	X				X					Manual ON/ Auto OFF
123	Male Washroom						X					Auto ON/ Auto OFF
124	Entry						X					Auto ON/ Auto OFF
125	Female Washroom						X					Auto ON/ Auto OFF
126	Chief	X	X				X					Manual ON/ Auto OFF
127	Inclusive Washroom	X					X					Auto ON/ Auto OFF
128	Captain	X	X				X					Manual ON/ Auto OFF
129	Storage	X					X					Manual ON/ Auto OFF
130	Training	X	X		X	X	X					Manual ON/ Auto OFF with daylight harvesting control for 3 zones of dimming to suit uniform light distribution in the room.

Room No.	Room Name	**Operational/Programming Requirements** (General Note 2)										
		Manual Switching	**Manual Dimming**	**Auto/Program Dim**	**Daylight On/Off**	**Daylight Dimming**	**Occupancy**	**Program Scenes**	**Partition Sensor**	**Scheduled**	**Always On / Night Light**	
132	Kitchen	X	X				X					Manual ON/ Auto OFF
133	Exterior South Terrasse					X				X		Scheduled by lighting control panel located in Support Room 111. Exterior photocell for daylight dimming. Schedule shut off for 12 midnight. Schedule turn on for 6am.
134	Exterior South Walkway					X				X		Scheduled by lighting control panel located in Support Room 111. Exterior photocell for daylight dimming. Schedule shut off for 12 midnight. Schedule turn on for 6am.
135	Exterior Front Entrace					X				X		Scheduled by lighting control panel located in Support Room 111. Exterior photocell for daylight dimming. Schedule shut off for 12 midnight. Schedule turn on for 6am.
136	Exterior Vehicle Apron					X				X		Scheduled by lighting control panel located in Support Room 111. Exterior photocell for daylight dimming. Schedule shut off for 12 midnight. Schedule turn on for 6am.
Roof												
140	Exterior Sign Lights					X				X		Scheduled by lighting control panel located in Support Room 111. Exterior photocell for daylight dimming. Schedule shut off for 12 midnight. Schedule turn on for 6am.

PART 1 GENERAL

1.1 SECTION INCLUDES

.1 Materials and components for dry type transformers up to 600 V primary, equipment identification and transformer installation.

1.2 RELATED SECTIONS

.1 Section 01 33 00 - Submittal Procedures.

.2 Section 26 05 00 - Common Work Results - Electrical.

1.3 REFERENCES

.1 Canadian Standards Association (CSA International)
- .1 CAN/CSA-C22.2 No.47, Air-Cooled Transformers (Dry Type).
- .2 CSA C9, Dry-Type Transformers.
- .3 CAN/CSA-C802.2, Minimum Efficiency Values for Dry-Type Transformers.

.2 National Electrical Manufacturers Association (NEMA)

.3 Ontario Regulation 404/12 – Energy Efficiency

1.4 PRODUCT DATA

.1 Submit product data in accordance with Section 01 33 00 - Submittal Procedures.

PART 2 PRODUCTS

2.1 TRANSFORMERS

.1 Use transformers of one manufacturer throughout project and in accordance with CAN/CSA-C22.2 No.47.

.2 Design .
- .1 Type: K-13 rated where noted on BOM
- .2 3 phase, kVA as noted, 600 V input, 120/208 V output, 60 Hz.
- .3 Voltage taps: standard.
- .4 Insulation: Class 220, 150 degrees C temperature rise.
- .5 Basic Impulse Level (BIL): 10kV.
- .6 Average sound level: standard
- .7 Impedance at 17 degrees C: standard
- .8 Efficiency: CAN/CSA-C802.2 compliant
- .9 Enclosure: NEMA 1, removable metal front panel.
- .10 Mounting: hung from underside of deck above and/or as indicated on the drawings.
- .11 Finish: in accordance with Section 26 05 00 - Common Work Results - Electrical.

.3 Scott T connected 2 coil type transformers will **NOT** be accepted.

2.2 EQUIPMENT IDENTIFICATION

.1 Provide equipment identification in accordance with Section 26 05 00 - Common Work Results - Electrical.

PART 3 EXECUTION

3.1 INSTALLATION

.1 Mount dry type transformers as indicated on the drawings, confirm any discrepancies with Consultant prior to rough-in for confirmation.

.2 Ensure adequate clearance around transformer for ventilation.

.3 Install transformers in level upright position.

.4 Remove shipping supports only after transformer is installed and just before putting into service.

.5 Loosen isolation pad bolts until no compression is visible.

.6 Make primary and secondary connections in accordance with wiring diagram.

.7 Energize transformers after installation is complete.

END OF SECTION

PART 1 GENERAL

1.1 RELATED REQUIREMENTS

.1 Section 26 28 16.02 – Moulded Case Circuit Breakers

1.2 REFERENCES

.1 Canadian Standards Association (CSA International)
- .1 CSA C22.2 No.29, Panelboards and enclosed Panelboards.
- .2 CSA C22.2 No.5.1, Moulded Case Circuit Breakers

1.3 SHOP DRAWINGS

.1 Submit shop drawings in accordance with Section 01 33 00 - Submittal Procedures.

.2 Drawings to include electrical detail of panel, branch breaker type, quantity, ampacity and enclosure dimension.

PART 2 PRODUCTS

2.1 PANELBOARDS

.1 Panelboards: to CSA C22.2 No.29 and product of one manufacturer.
- .1 Install circuit breakers in panelboards before shipment as applicable.
- .2 In addition to CSA requirements manufacturer's nameplate must show fault current that panel including breakers has been built to withstand.

.2 250 & 600 V panelboards: bus and breakers rated for 10kA (symmetrical) interrupting capacity or as indicated.

.3 Sequence phase bussing with odd numbered breakers on left and even on right, with each breaker identified by permanent number identification as to circuit number and phase.

.4 Panelboards: mains, number of circuits, and number and size of branch circuit breakers as indicated.

.5 Two keys for each panelboard and key panelboards alike.

.6 Copper bus with neutral of same ampere rating as mains.

.7 Mains: suitable for bolt-on breakers.

.8 Trim with concealed front bolts and hinges.

.9 Trim and door finish: baked grey enamel.

2.2 BREAKERS

.1 Breakers: to Section 26 28 16.02 - Moulded Case Circuit Breakers.

.2 Breakers with thermal and magnetic tripping in panelboards except as indicated otherwise.

.3 Main breaker: separately mounted on top or bottom of panel to suit cable entry. When mounted vertically, down position should open breaker.

.4 Lock-on devices for 15 to 30 A breakers installed as indicated.

2.3 EQUIPMENT IDENTIFICATION

.1 Provide equipment identification in accordance with Section 26 05 00 - Common Work Results - Electrical.

.2 Nameplate for each panelboard size 4 engraved as indicated.

.3 Nameplate for each circuit in distribution panelboards size 2 engraved as indicated.

.4 Complete circuit directory with typewritten legend showing location and load of each circuit.

2.4 STANDARD OF ACCEPTANCE

.1 Schneider (Square D).

.2 Eaton

.3 Siemens

PART 3 EXECUTION

3.1 INSTALLATION

.1 Locate panelboards as indicated and mount securely, plumb, true and square, to adjoining surfaces.

.2 Install surface mounted panelboards on plywood backboards in accordance with Section 06 10 00 - Rough Carpentry. Where practical, group panelboards on common backboard.

.3 Mount panelboards to height specified in Section 26 05 00 - Common Work Results - Electrical or as indicated.

.4 Connect loads to circuits, connect bonding and ground conductors.

.5 Connect neutral conductors to common neutral bus with respective neutral identified.

.6 Install circuit breakers as indicated.

.7 Provide breaker space fillers as required.

3.2 ADJUSTING AND CLEANING

.1 Clean all panelboards on completion of work. Adjust panel trims to properly fit. Adjust all breaker trips.

3.3 SPARES

.1 Provide spares as indicated on panel schedules.

END OF SECTION

PART 1 GENERAL

1.1 ACTION AND INFORMATIONAL SUBMITTALS

.1 Provide submittals in accordance with Section 01 33 00 - Submittal Procedures.

.2 Submit fuse time-current characteristics for each fuse type and size. Time-current characteristics to include: average melting time-current, I^2t (for fuse coordination), and peak let-through current.

1.2 DELIVERY, STORAGE AND HANDLING

.1 Ship fuses in original containers.

.2 Do not ship fuses installed in equipment.

.3 Store fuses in original containers in moisture-free storage cabinet.

1.3 EXTRA MATERIALS

.1 Provide maintenance materials in accordance with Section 01 78 00 - Closeout Submittals.

.2 Three spare fuses of each type and size.

PART 2 PRODUCTS

2.1 FUSES - GENERAL

.1 Fuse type references L1, L2, J1, R1, etc. have been adopted for use in this specification.

.2 Fuses: product of one manufacturer.

2.2 FUSE TYPES

.1 Class J fuses.
- .1 Type J1, time delay, capable of carrying 500% of its rated current for 10 s minimum.
- .2 Type J2, fast acting.

.2 Class R -R fuses.
- .1 Type R1, (UL Class RK1), time delay, capable of carrying 500% of its rated current for 10 s minimum, to meet UL Class RK1 maximum let-through limits.
- .2 Type R2, time delay, capable of carrying 500% of its rated current for 10 s minimum.
- .3 Type R3, (UL Class RK1), fast acting Class R, to meet UL Class RK1 maximum let-through limits.

.3 Class C fuses.

2.3 FUSE STORAGE CABINET

.1 Fuse storage cabinet,manufactured from 2.0mm thick aluminum 750 mm high, 600mm wide, 300mm deep, hinged, lockable front access door finished in accordance with Section 26 05 00 - Common Work Results for Electrical.

.2 Wall mounted in each main electrical room, in final location to be determined by the Consultant on-site.

PART 3 EXECUTION

3.1 INSTALLATION

.1 Install fuses in mounting devices immediately before energizing circuit.

.2 Ensure correct fuses fitted to physically matched mounting devices.
  .1 Install rejection clips for Class R fuses.

.3 Ensure correct fuses fitted to assigned electrical circuit.

.4 Where UL Class RK1 fuses are specified, install warning label "Use only UL Class RK1 fuses for replacement" on equipment.

.5 Install spare fuses in fuse storage cabinet.

END OF SECTION

PART 1 GENERAL

1.1 REFERENCES

.1 Canadian Standards Association (CSA International).
  .1 CSA-C22.2 No. 5, Moulded-Case Circuit Breakers, Molded-Case Switches and Circuit-Breaker Enclosures (Tri-national standard with UL 489, tenth edition, and the second edition of NMX-J-266-ANCE).

1.2 ACTION AND INFORMATIONAL SUBMITTALS

.1 Submit product data in accordance with Section 01 33 00 - Submittal Procedures.

.2 Include time-current characteristic curves for breakers with ampacity of 30A and over.

PART 2 PRODUCTS

2.1 BREAKERS GENERAL

.1 Moulded-case circuit breakers, Circuit breakers, and Ground-fault circuit-interrupters: to CSA C22.2 No. 5

.2 Bolt-on moulded case circuit breaker: quick- make, quick-break type, for manual and automatic operation with temperature compensation for 40 degrees C ambient.

.3 Common-trip breakers: with single handle for multi-pole applications.

.4 Magnetic instantaneous trip elements in circuit breakers to operate only when value of current reaches setting.
  .1 Trip settings on breakers with adjustable trips to range from 3-8 times current rating.

.5 Circuit breakers with interchangeable trips if applicable.

.6 Circuit breakers to have minimum 10,000A symmetrical rms interrupting capacity rating.

2.2 THERMAL MAGNETIC BREAKERS DESIGN A

.1 Moulded case circuit breaker to operate automatically by means of thermal and magnetic tripping devices to provide inverse time current tripping and instantaneous tripping for short circuit protection.

2.3 MAGNETIC BREAKERS DESIGN B

.1 Moulded case circuit breaker to operate automatically by means of magnetic tripping devices to provide instantaneous tripping for short circuit protection.

2.4 CURRENT LIMITING AND SERIES RATED THERMAL MAGNETIC BREAKERS DESIGN C

.1 Thermal magnetic breakers with current limiters.
  .1 Time current limiting characteristics of fuses limiters coordinated with time current tripping characteristics of circuit breaker.
  .2 Co-ordination to result in interruption by breaker of fault-level currents up to interrupting capacity of breaker.

.2 Series rated breakers to be manufacturer tested and listed. Breakers to be applied following manufacturer's guidelines and accepted best practice.
  .1 Breakers applied following manufacturer's guidelines and accepted best practice.

2.5 SOLID STATE TRIP BREAKERS

.1 Moulded case circuit breaker to operate by means of solid-state trip unit with associated current monitors and self-powered shunt trip to provide inverse time current trip under overload condition, and long time, short time and instantaneous tripping for phase and/or ground fault short circuit protection.

2.6 OPTIONAL FEATURES

.1 Include where necessary to meet design intent indicated on the drawings:
  .1 Shunt trip.
  .2 Shunt close
  .3 Auxiliary switch.
  .4 Motor-operated mechanism c/w time delay unit.
  .5 Under-voltage release.
  .6 On-off locking device.
  .7 Handle mechanism.

PART 3 EXECUTION

3.1 INSTALLATION

.1 Install circuit breakers in appropriate location to suit equipment type as indicated.

END OF SECTION

PART 1 GENERAL

1.1 REFERENCES

.1 Canadian Standards Association (CSA International)
  .1 CAN/CSA-C22.2 No.144, Ground Fault Circuit Interrupters.

.2 National Electrical Manufacturers Association (NEMA)
  .1 NEMA PG 2.2, Application Guide for Ground Fault Protection Devices for Equipment.

1.2 ACTION AND INFORMATIONAL SUBMITTALS

.1 Submittals in accordance with Section 01 33 00 - Submittal Procedures.

.2 Submit product data and shop drawings.

.3 Submit test report for field testing of ground fault equipment to Consultant and a certificate that system as installed meets criteria specified herein.

PART 2 PRODUCTS

2.1 MATERIALS

.1 Equipment and components for ground fault circuit interrupters (GFCI): to CAN/CSA-C22.2 No.144

.2 Components comprising ground fault protective system to be of same manufacturer.

2.2 BREAKER TYPE GROUND FAULT INTERRUPTER

.1 Single, Two or Three pole ground fault circuit interrupter as shown on panel schedules and single line drawings.

PART 3 EXECUTION

3.1 INSTALLATION

.1 Do not ground neutral on load side of ground fault relay.

.2 Connect supply and load wiring to equipment in accordance with manufacturer's recommendations.

3.2 FIELD QUALITY CONTROL

.1 Perform tests in accordance with Section 26 05 00 - Common Work Results – Electrical and co-ordinate with Section 01 45 00 - Quality Control if required.

.2 Arrange for field testing of ground fault equipment by Contractor before commissioning service.

.3 Demonstrate simulated ground fault tests to Consultant.

END OF SECTION

PART 1 GENERAL

1.1 REFERENCES

.1 Canadian Standards Association (CSA International).
  .1 CAN/CSA C22.2 No.4, Enclosed Switches.
  .2 CSA C22.2 No.39, Fuseholder Assemblies.

1.2 ACTION AND INFORMATIONAL SUBMITTALS

.1 Submit product data in accordance with Section 01 33 00 - Submittal Procedures.

1.3 WASTE MANAGEMENT AND DISPOSAL

.1 Separate waste materials for in accordance with Section 01 74 19 - Waste Management and Disposal.

.2 Remove from site and dispose of packaging materials at appropriate recycling facilities.

.3 Collect and separate for disposal of packaging material or for recycling in accordance with Waste Management Plan.

.4 Fold up metal banding, flatten and place in designated area for recycling.

PART 2 PRODUCTS

2.1 DISCONNECT SWITCHES

.1 Fusible, non-fusible, horsepower rated disconnect switch in CSA Enclosure one, to CAN/CSA C22.2 No.4, size as indicated.

.2 Provision for padlocking in on-off switch position by three locks.

.3 Mechanically interlocked door to prevent opening when handle in ON position.

.4 Fuses: size as indicated and/or as required to suit manufacturer supplied equipment, in accordance with Section 26 28 13.01 - Fuses - Low Voltage.

.5 Fuseholders: to CSA C22.2 No.39 suitable without adaptors, for type and size of fuse required.

.6 Quick-make, quick-break action.

.7 ON-OFF switch position indication on switch enclosure cover.

.8 Provide auxiliary contact for elevator disconnects as noted on plans.

2.2 EQUIPMENT IDENTIFICATION

.1 Provide equipment identification in accordance with Section 26 05 00 - Common Work Results - Electrical.

.2 Indicate name of load controlled on size 4 nameplate.

PART 3 EXECUTION

3.1 INSTALLATION

.1 Install disconnect switches complete with fuses if applicable.

END OF SECTION

PART 1 GENERAL

1.1 RELATED REQUIREMENTS

.1 Section 01 79 00 – Demonstration and Training

.2 Section 01 91 31 – Commissioning Plan.

.3 Section 26 05 00 – Common Work Results Electrical.

.4 Section 26 05 21 – Wires and Cables (0-1000V)

1.2 REFERENCES

.1 International Electrotechnical Commission (IEC)
- .1 IEC 947-4-1-2002, Part 4: Electromechanical contactors and motor-starters.

1.3 ACTION AND INFORMATIONAL SUBMITTALS

.1 Provide submittals in accordance with Section 01 33 00 - Submittal Procedures.

.2 Product Data:
- .1 Provide manufacturer's printed product literature, specifications and datasheet and include product characteristics, performance criteria, physical size, finish and limitations.

.3 Shop Drawings:
- .1 Provide shop drawings: in accordance with Section 01 33 00 - Submittal Procedures.
  - .1 Provide shop drawings for each type of starter to indicate:
    - .1 Mounting method and dimensions.
    - .2 Starter size and type.
    - .3 Layout of identified internal and front panel components.
    - .4 Enclosure types.
    - .5 Wiring diagram for each type of starter
    - .6 Interconnection diagrams.
    - .7 Elementary wiring diagrams shall include all power and control components packaged within the AC drive controller unit and documentation of any non-default settings programmed at the MCC factory.

1.4 CLOSEOUT SUBMITTALS

.1 Provide maintenance materials in accordance with Section 01 78 00 - Closeout Submittals.

.2 Submit operation and maintenance data for each type and style of motor starter for incorporation into maintenance manual.

.3 Extra Materials:
- .1 Provide listed spare parts for each different size and type of starter.
  - .1 3 contacts, stationary.
  - .2 3 contacts, movable.
  - .3 1 contacts, auxiliary.
  - .4 1 control transformer of each size.
  - .5 1 operating coil.
  - .6 2 fuses of each size.

.7 4 of each indicating lamp bulb type used.

1.5 DELIVERY, STORAGE AND HANDLING

.1 Deliver, store and handle in accordance with Section 01 61 00 - Common Product Requirements.

.2 Deliver materials to site in original factory packaging, labeled with manufacturer's name, address.

PART 2 PRODUCTS

2.1 MANUFACTURER

.1 Motor starters standard of acceptance shall be based on the Altivar 61 drive as indicated on the drawings and manufactured by Schneider.

.2 Alternate/Equal Product Approval: All motor starters with equal or more advanced features than base bid product for operation to suit controls as indicated by Section 25 shall be acceptable by the following manufacturer’s with final approval of accessories and features to be validated by Engineer during submittal review:
- .1 Schneider Electric
- .2 Eaton/Cutler-Hammer
- .3 Allen-Bradley
- .4 Siemens
- .5 ABB

2.2 MATERIALS

.1 Starters: to IEC 947-4 with AC4 utilization category.

.2 Half size starters not acceptable.

2.3 MANUAL MOTOR STARTERS

.1 Single or Three phase manual motor starters of size, type, rating, and enclosure type as indicated, with components as follows:
- .1 Switching mechanism, quick make and break.
- .2 One or Three overload heaters, manual reset, trip indicating handle.
  - .1 Accessories:
    - .1 Toggle switch: heavy duty, oil tight, labeled as indicated.
    - .2 Indicating light: heavy duty, oil tight, type and colour as indicated.
    - .3 Locking tab to permit padlocking in "ON" or "OFF" position.

2.4 FULL VOLTAGE MAGNETIC STARTERS

.1 Single or Three phase Magnetic and combination magnetic starters of size, type, rating and enclosure type as indicated with components as follows:
- .1 Contactor solenoid operated, rapid action type.
- .2 Motor overload protective device in each phase, manually reset from outside enclosure.
- .3 Wiring and schematic diagram inside starter enclosure in visible location.
- .4 Identify each wire and terminal for external connections, within starter, with permanent number marking identical to diagram.
- .5 Suitable NEMA enclosure for individual starters.

.2 Combination type starters to include motor circuit interrupter with operating lever on outside of enclosure to control disconnect and provision for:
- .1 Locking in "OFF" position with up to 3 padlocks.
- .2 Independent locking of enclosure door.
- .3 Provision for preventing switching to "ON" position while enclosure door open.

.3 Accessories:
- .1 Selector switches: heavy duty, oil tight labelled as indicated.
- .2 Indicating lights: standard type, GREEN for ON and RED for OFF.
- .3 1-N/O and 1-N/C spare auxiliary contacts unless otherwise indicated.

2.5 VARIABLE FREQUENCY DRIVES

.1 The AC drive controller unit shall be a combination disconnect-drive MCC style unit or loose mounted unit as indicated on the drawings. The integral input fusible switch shall provide OESC required branch circuit protection. The fusible switch shall have an external operator.

.2 Units should be of modular construction so that it is possible to readily interchange units of the same size without modifications to the MCC structure.

.3 All conducting parts on the line side of the unit disconnect shall be isolated to prevent accidental contact with those parts.

.4 AC drive controller units up to 50 hp variable torque shall be plug-on units which connect to the vertical bus through a spring-reinforced stab-on connector. Units larger than 50 hp variable torque shall be connected directly to the main horizontal bus with appropriately sized cable or riser bus.

.5 Provisions shall be provided for locking all disconnects in the off position with up to three padlocks.

.6 All AC drive controller units shall be provided with unit control terminal blocks for use in terminating field wiring. Terminal blocks shall be pull-apart type, 250 V, and rated for 10 amperes. All current-carrying parts shall be tin-plated. Terminals shall be accessible from inside the unit when the unit door is opened. The stationary portion of the terminal block shall be used for factory connections and will remain attached to the unit when the portion used for field connections is removed. The terminals used for field connections shall be accessible so they can be wired without removing the unit or any of its components.

.7 It shall be possible to read the drive information and command the drive through a door mounted, remote graphical interface.

.8 Drive shall provide a sufficient number of input and output contacts, either 4-20mA or 0-10VDC to operate as specified in Division 17.

.9 .9 Variable Frequency Drives must be of the same manufacturer of the MCC they are housed in.

2.6 CONTROL TRANSFORMER

.1 Single phase, dry type, control transformer with primary voltage as indicated and 120 V secondary, complete with secondary fuse, installed in with starter as indicated.

.2 Size control transformer for control circuit load plus 20% spare capacity.

2.7 ACCESSORIES

.1 Pushbutton: heavy duty, oil tight as required.

.2 Selector switches: heavy duty, oil tight as required.

.3 Indicating lights: heavy duty, oil tight, type and colour as indicated.

2.8 FINISHES

.1 Apply finishes to enclosure in accordance with Section 26 05 00 - Common Work Results for Electrical.

2.9 EQUIPMENT IDENTIFICATION

.1 Provide equipment identification in accordance with Section 26 05 00 - Common Work Results for Electrical.

PART 3 EXECUTION

3.1 INSTALLATION

.1 Install starters and control devices in accordance with manufacturer's instructions.

.2 Install and wire starters and controls as indicated.

.3 Ensure correct fuses installed.

.4 Confirm motor nameplate and adjust overload device to suit.

.5 Coordinate all programming of VFD drives with Section 22 and 23 to suit specific load requirements and controls with Section 25.

3.2 FIELD QUALITY CONTROL

.1 Perform tests in accordance with Section 26 05 00 - Common Work Results for Electrical and manufacturer's instructions.

.2 Operate switches and contactors to verify correct functioning.

.3 Perform starting and stopping sequences of contactors and relays.

.4 Check that sequence controls, interlocking with other separate related starters, equipment, control devices, operate as indicated.

3.3 CLEANING

.1 Clean in accordance with Section 01 74 11 - Cleaning.
  .1 Remove surplus materials, excess materials, rubbish, tools and equipment.

END OF SECTION

PART 1 GENERAL

1.1 RELATED REQUIREMENTS

.1 Section 26 05 00 – Common Work Results Electrical

.2 Section 26 05 29 – Hangars and Supports

.3 Section 26 05 32 – Conduits and Fittings

1.2 REFERENCES

.1 American National Standards Institute (ANSI)
- .1 ANSI C82.1, Lamp Ballasts-Line Frequency Fluorescent Lamp Ballast.
- .2 ANSI C82.4, Ballasts for High-Intensity-Discharge and Low-Pressure Sodium Lamps Multi Supply Type.

.2 American National Standards Institute/Institute of Electrical and Electronics Engineers (ANSI/IEEE)
- .1 ANSI/IEEE C62.41, Recommended Practice for Surge Voltages in Low-Voltage AC Power Circuits.

.3 ASTM International Inc.
- .1 ASTM F 1137-[00(2006)], Standard Specification for Phosphate/Oil and Phosphate/Organic Corrosion Protective Coatings for Fasteners.

.4 Canadian Standards Association (CSA International)

.5 ICES-005, Radio Frequency Lighting Devices.

.6 Underwriters' Laboratories of Canada (ULC)

1.3 ACTION AND INFORMATIONAL SUBMITTALS

.1 Provide submittals in accordance with Section 01 33 00 - Submittal Procedures.

.2 Product Data:
- .1 Provide manufacturer's printed product literature, specifications and datasheet and include product characteristics, performance criteria, physical size, finish and limitations.
- .2 Provide complete photometric data prepared by independent testing laboratory for luminaires where specified, for review by Consultant.

.3 Quality assurance submittals: provide following in accordance with Section 01 45 00 - Quality Control.
- .1 Manufacturer's instructions: provide manufacturer's written installation instructions and special handling criteria, installation sequence and cleaning procedures.

1.4 DELIVERY, STORAGE AND HANDLING

.1 Deliver, store and handle materials in accordance with Section 01 61 00 - Common Product Requirements.

.2 Deliver materials to site in original factory packaging, labeled with manufacturer's name and address.

.3 Packaging Waste Management: remove for reuse and return if applicable of pallets, crates, paddling, and packaging materials in accordance with Section 01 74 19 – Waste Management and Disposal.

.4 Divert unused metal materials from landfill to metal recycling facility.

.5 Disposal and recycling of fluorescent lamps as per local regulations.

.6 Disposal of old PCB filled ballasts.

PART 2 PRODUCTS

2.1 LAMPS

.1 Supply luminaires complete with compatible lamps and ballasts/drivers as detailed and shown on the drawings using approved equipment as required by the lamp manufacturer.

.2 Unless otherwise indicated, all LED T8 retrofit lamps shall be manufactured by:
- .1 Phillips

.3 All alternate/equal LED T8 lamp requests to be submitted in writing for approval by the design professional a minimum of 10 working days prior to the tender closing date and must be made available to all bidders.
- .1 The T8 retrofit lamp supplier must be approved in writing by Consultant based on formal submission to be provided for Engineer's review and approval indicating the following requirements have been met:
  - .1 T8, medium bi-pin configuration.
  - .2 CRI of 82; or greater.
  - .3 Minimum 50,000 hour rated lamp life or greater (L70).
  - .4 5 year warranty based on 12 hours operation per day, 365 days per year, utilizing 0.88 bf electronic instant start ballasts.
  - .5 All length configurations available as utilized in fluorescent fixture selections on the drawings (eg. 2', 3', 4') from the same manufacturer.

.4 Integral LED lamps and sources to be as specified or the LED drivers supplied with Consultant approved luminaires.

2.2 BALLASTS

.1 Fluorescent ballast: CBM and CSA certified, energy efficient type, IC electronic instant start.
- .1 Rating: voltage as indicated, for use with T8 LED retrofit lamps and wattage as noted on plans.
- .2 Totally encased and designed for 40 degrees Celsius ambient temperature.
- .3 Power factor: minimum 95% with 95% of rated lamp lumens.
- .4 Harmonics: 10% maximum THD.
- .5 Operating frequency of electronic ballast: 20 kHz minimum.
- .6 Ballast factor: 0.88; or as noted.
- .7 Sound rated: Class A.
- .8 Mounting: integral with luminaire.

.2 LED driver, electronic 0-10V dimmable:
- .1 Rating: voltage as indicated, for use with fixtures as indicated on plans.
- .2 Power factor: minimum 90% with 95% of rated lamp lumens.

.3 Type: solid state.
.4 Input voltage range: plus or minus 10% of nominal.
.5 Temperature operation: Instant hot and cold (re)start,
.6 for use down to -30 celsius for all exterior fixtures.
.7 Sound rated: Class A.
.8 Mounting: integral with luminaire or remote where noted.

2.3 FINISHES

.1 Light fixture finish and construction to meet ULC listings and CSA certifications related to intended installation.

2.4 OPTICAL CONTROL DEVICES

.1 As indicated in luminaire section of electrical equipment schedule, or provide fixture approved as an equal in writing by the consultant.

.2 All acrylic diffusers to be tested in conformance with CAN/ULC-S102-M.

2.5 LUMINAIRES

.1 As indicated on the drawings, or provide fixture approved as an equal/alternate in writing by the Consultant.

.2 All proposed product equal/alternates must meet design intent for light source, quality and visual appearance to suit aesthetic design intent.

.3 All alternate/equal requests to be submitted in writing for approval by the design professional a minimum of seven (7) calendar days prior to the tender closing date and must be made available to all bidders.

PART 3 EXECUTION

3.1 INSTALLATION

.1 Locate and install luminaires as indicated.

.2 Provide adequate support to suit ceiling system.

3.2 WIRING

.1 Connect luminaires to lighting circuits:
.1 Install flexible or rigid conduit for luminaires as indicated.

3.3 LUMINAIRE SUPPORTS

.1 For suspended ceiling installations support luminaires independently of ceiling.

3.4 LUMINAIRE ALIGNMENT

.1 Align luminaires mounted in continuous rows to form straight uninterrupted line.

.2 Align luminaires mounted individually parallel or perpendicular to building grid lines.

3.5 CLEANING

.1 Clean in accordance with Section 01 74 11 - Cleaning.
  .1 Remove surplus materials, excess materials, rubbish, tools and equipment.

.2 Waste Management: separate waste materials for recycling in accordance with Section 01 74 21 - Construction/Demolition Waste Management and Disposal.

END OF SECTION

PART 1 GENERAL

1.1 RELATED REQUIREMENTS

.1 Section 26 05 34 - Conduits, Conduit Fastenings and Conduit Fittings

.2 Section 26 05 21 - Wires and Cables 0-1000 V

1.2 REFERENCES

.1 Canadian Standards Association (CSA International)
  .1 CSA C22.2 No.141, Unit Equipment for Emergency Lighting.

1.3 ACTION AND INFORMATIONAL SUBMITTALS

.1 Submit product data in accordance with Section 01 33 00 - Submittal Procedures.

.2 Data to indicate system components, mounting method, source of power and special attachments.

1.4 WASTE MANAGEMENT AND DISPOSAL

.1 Separate and recycle waste materials in accordance with Section 01 74 19 - Waste Management and Disposal.

.2 Remove from site and dispose of packaging materials at appropriate recycling facilities.

.3 Collect and separate for disposal packaging material for recycling in accordance with Waste Management Plan.

.4 Divert unused metal and wiring materials from landfill to metal recycling facility.

.5 Dispose of unused batteries at official hazardous material collections site.

.6 Fold up metal banding, flatten and place in designated area for recycling.

1.5 WARRANTY

.1 Standard 10 year manufacturer's warranty on all batteries.

PART 2 PRODUCTS

2.1 EQUIPMENT

.1 Emergency lighting equipment: to CSA C22.2 No.141.

.2 Refer to Electrical Equipment Schedule on plans for standard of acceptance.

.3 Approved emergency lighting manufacturers required to meet or exceed the product specifications as indicated on the drawings are as follows
  .1 Aimlite
  .2 Thomas & Betts (Lumacell, Emergi-lite, Ready-Lite)
  .3 Stanpro
  .4 Beghelli.

2.2 WIRING OF REMOTE HEADS

.1 Conduit: type EMT in accordance with Section 26 05 34 - Conduits, Conduit Fastenings and Conduit Fittings.

.2 Conductors: type and size in accordance with Section 26 05 21 - Wires and Cables 0-1000 V, sized to suit Contractor planned installation method in accordance with manufacturer's recommendations.

PART 3 EXECUTION

3.1 INSTALLATION

.1 Install unit equipment and remote mounted fixtures.

.2 Direct heads and adjust as necessary to meet requirements of local building inspector.

END OF SECTION

PART 1 GENERAL

1.1 POWERED EQUIPMENT SCHEDULE

.1 The "Powered Equipment Schedule", lists all major powered equipment items supplied under other Divisions, and their associated electrical requirements, and is attached to this Section of the Specification.

.1 Refer to Section 26 60 00a “Powered Equipment Schedule” for coordination of all items associated with construction.

1.2 USE OF THE SCHEDULES

.1 Read this schedule, together with the drawings and other Sections of this Specification specific to each area of construction, in order to determine the scope of the Division 26 Electrical work required for the equipment supplied by other Divisions.

END OF SECTION

Powered Equipment Schedule

Legend: O: Owner G: General Contractor E:Electrical Contractor M:Mechanical Contractor C:Controls Contractor V: Equipment Vendor F: Fused / U: Unfused

REFERENCE NOTES		DESCRIPTION	LOCATION No.	LOCATION	LOAD HP	LOAD kW	LOAD FLA	LOAD kVA	VOLTAGE	PHASE	SOURCE	CABLE SIZE	CABLE TYPE	LOAD DEVICE Supply	LOAD DEVICE Install	LOAD DEVICE Connect	STARTER/ O/L Supply	STARTER/ O/L Install	STARTER/ O/L Connect	STARTER/ O/L Type	LOCAL D/S Supply	LOCAL D/S Install	LOCAL D/S Connect	LOCAL D/S Fused / Unfused	CONTROL Supply	CONTROL Install	CONTROL Connect	CONTROL .	REMARKS
	Mechanical Equipment																												
	HVAC-1	Air Handling Unit	140	Flat Roof	-	12.47	15.0	15.59	600	3	DP-1	Refer to DWG E010	Cu	M	M	E	M	V	V	-	M	V	V	U	C	C	C		Single Point Direct Connection
	MAU-1	Make-up Air Unit	140	Flat Roof	3.00	4.49	5.4	5.61	600	3	DP-1	Refer to DWG E010	Cu	M	M	E	M	V	V	-	M	V	V	U	C	C	C		Single Point Direct Connection
	EF-1	Exhaust Fan #1	140	Flat Roof	0.25	0.70	5.8	0.70	120	1	PP-A	#12/2 + BND	Cu	M	M	E	-	-	-	relay	M	E	E	U	C	C	C		
	HT-1	Heat Trace	140	Flat Roof	-	0.18	1.5	0.18	120	1	PP-A	#12/2 + BND	Cu	M	E	E	-	-	-	-	-	-	-	-	M	E	E		Refer to mechanical schedules for more information on power supply and controller location.
	HT-2	Heat Trace	140	Flat Roof	-	0.18	1.5	0.18	120	1	PP-A	#12/2 + BND	Cu	M	E	E	-	-	-	-	-	-	-	-	M	E	E		Refer to mechanical schedules for more information on power supply and controller location.
	HT-3	Heat Trace	140	Flat Roof	-	0.18	1.5	0.18	120	1	PP-A	#12/2 + BND	Cu	M	E	E	-	-	-	-	-	-	-	-	M	E	E		Refer to mechanical schedules for more information on power supply and controller location.
	EF-2	Exhaust Fan #2	101	Apparatus Bay	0.50	1.18	9.8	1.18	120	1	PP-A	#12/2 + BND	Cu	M	M	E	-	-	-	relay	M	E	E	U	C	C	C		
	EF-3	Exhaust Fan #3	101	Apparatus Bay	0.50	1.18	9.8	1.18	120	1	PP-A	#12/2 + BND	Cu	M	M	E	-	-	-	relay	M	E	E	U	C	C	C		
	CF-1	Ceiling Fan #1	101	Apparatus Bay	-	-	-	-	120	1	PP-B	#12/2 + BND	Cu	M	M	E	-	-	-	-	-	-	-	-	M	E	E		Typical of 2.
	TH-1	Gas Fired Tube Heater	101	Apparatus Bay	-	0.14	1.2	0.14	120	1	PP-B	#12/2 + BND	Cu	M	M	E	-	-	-	-	-	-	-	-	C	C	C		Typical of 3.
	UH-1	Unit Heater	101	Apparatus Bay	-	0.61	5.1	0.61	120	1	PP-A	#12/2 + BND	Cu	M	M	E	-	-	-	relay	V	V	V	U	C	C	C		Typical of 2.
	RG-1	Range Hood	132	Apparatus Bay	-	0.19	1.6	0.19	120	1	PP-B	#12/2 + BND	Cu	M	M	E	-	-	-	-	-	-	-	-	-	-	-		
	FF-1	Electric Force Flow Heater #1	124	Vestibule	-	5.00	17.4	6.25	208	3	PP-A	#10/3 + BND	Cu	E	E	E	-	-	-	-	E	V	V	-	V	V	V		
	FF-2	Electric Force Flow Heater #2	121	West Corridor	-	3.00	14.4	3.00	208	1	PP-A	#12/2 + BND	Cu	E	E	E	-	-	-	-	E	V	V	-	V	V	V		
	VB-1	2kW Reheat Coil	126	Chief	-	2.00	9.6	2.00	208	1	PP-B	#12/2 + BND	Cu	M	M	E	-	-	-	-	-	-	-	-	C	C	C		
	VB-3	5.5kW Reheat Coil	130	Training	-	5.50	26.4	5.50	208	1	PP-B	#8/2 + BND	Cu	M	M	E	-	-	-	-	-	-	-	-	C	C	C		
	DHWT-1	Domestic Hot Water Tank	111	Support	-	0.60	5.0	0.60	120	1	PP-A	#12/2 + BND	Cu	M	M	E	-	-	-	-	-	-	-	-	V	V	M		
	P-1	Recirculating Pump	111	Support	0.03	-	-	-	120	1	PP-A	#12/2 + BND	Cu	M	M	E	-	-	-	relay	E	E	E	U	C	C	C		
	AC	Sanborn Air Compressor	111	Support	5.00	6.45	31.0	6.45	208	1	PP-A	#8/2 + BND	Cu	O	M	E	E	E	E	mag.	E	E	E	U	E	E	E		Supply new pressure switch.
	TC	Scott Air Breathing Compressor	111	Support	10.00	11.44	55.0	11.44	208	1	PP-A	#4/2 + BND	Cu	O	M	E	O	E	E	-	E	E	E	U	E	E	E		

PART 1 GENERAL

1.1 RELATED REQUIREMENTS

.1 Section 01 33 00 - Submittal Procedures.

.2 Section 27 05 26 – Grounding-Bonding - Communications Systems

.3 Section 27 05 28 – Pathways for Communication Systems

.4 Section 27 10 05 – Structured Communication Cabling

1.2 REFERENCE STANDARDS

.1 BICSI – Information Transport Systems Installation Methods Manual (ITSIMM)

.2 BICSI – Telecommunications Distribution Methods Manual

.3 Canadian Standards Association (CSA International)
- .1 CSA-C22.2 No. 214-02, Communications Cables (Bi-National standard with UL 444).
- .2 CSA-C22.2 No. 232, Optical Fiber Cables.

.4 Telecommunications Industry Association (TIA)/Electronic Industries Alliance (EIA)
- .1 TIA/EIA-568-B.1, Commercial Building Telecommunications Cabling Standard, Part 1: General Requirements.
- .2 TIA/EIA-568-B.2, Commercial Building Telecommunications Cabling Standard, Part 2: Balanced Twisted-Pair Cabling Components.
- .3 TIA/EIA-568-B.3, Optical Fiber Cabling Components Standard.
- .4 EIA/TIA 569-B Standards
- .5 TIA/EIA-606-A, Administration Standard for the Commercial Telecommunications Infrastructure.
- .6 TIA TSB-140-2004, Telecommunications Systems Bulletin - Additional Guidelines for Field-Testing Length, Loss and Polarity of Optical Fiber Cabling Systems.
- .7 TIA-598-C-(2005), Optical Fiber Cable Color Coding.

1.3 QUALITY ASSURANCE

.1 All contractors bidding on work under this Division <u>must</u> meet the following minimum requirements:
- .1 Must have been offering commercial telecommunications cabling and network equipment installation services for a minimum of 5 years.
- .2 Must have successfully completed commercial products of similar size and scope and ability to provide project references of projects to Consultant.
- .3 Must meet all mandatory requirements and responsibilities as identified in Section 27 10 05 – Structured Communication Cabling.

1.4 DESCRIPTION OF IN-CONTRACT WORK

.1 Supply and installation of all communications grounding-bonding system as indicated, in accordance with Section 27 05 26 – Grounding-Bonding – Communications Systems.

.2 Supply and installation of all communications pathways as indicated, in accordance with Section 27 05 28 – Pathways for Communication Systems with pull-strings in place and appropriately labeled.

.3 Supply and installation communications termination hardware, equipment rack and cable management, accessories, BIX blocks and cross-over panels on plywood backboards, punch down patch panels (copper),1:1 patch cables

1.5 WORK BY OTHERS (N.I.C.)

.1 The following work will be provided by the Telephone utility and coordinated with the provisioning work of this contract:

.1 Supply and installation of incoming communications from property line to main demark.

1.6 ACTION AND INFORMATIONAL SUBMITTALS

.1 Submittals: in accordance with Section 01 33 00 - Submittal Procedures.

1.7 COORDINATION

.1 Coordinate with other Divisions for details of millwork and window wall construction to ensure correct rough-in method.

.2 Coordinate installation of raceway systems with Section 22 and 23 for duct runs and with Section 26 & 28 for all conduit routing.

1.8 DELIVERY, STORAGE AND HANDLING

.1 Material Delivery Schedule: coordinate delivery of material to suit proposed construction schedule.

1.9 SYSTEM STARTUP

.1 Instruct Consultant and operating personnel in operation, care and maintenance of systems, system equipment and components.

.2 Arrange and pay for services of manufacturer's factory service engineer to supervise start-up of installation, check, adjust, balance and calibrate components and instruct operating personnel.

.3 Provide these services for such period, and for as many visits as necessary to put equipment in operation, and ensure that operating personnel are conversant will aspects of its care and operation.

1.10 OPERATING INSTRUCTIONS AND MAINTENANCE DATA

.1 Provide for each system and principal item of equipment as specified in technical sections for use by operation and maintenance personnel.

.2 Operating instructions to include following:

.1 Wiring diagrams, control diagrams, and control sequence for each principal system and item of equipment.
.2 Start up, proper adjustment, operating, lubrication, and shutdown procedures.
.3 Safety precautions.
.4 Procedures to be followed in event of equipment failure.
.5 Other items of instruction as recommended by manufacturer of each system or item of equipment.

.3 Names and addresses of nearest suppliers for all items included in maintenance manuals.

.4 Print or engrave operating instructions and frame under glass or in approved laminated plastic.

.5 Post instructions where directed.

.6 For operating instructions exposed to weather, provide weather-resistant materials or weatherproof enclosures.

.7 Ensure operating instructions will not fade when exposed to sunlight and are secured to prevent easy removal or peeling.

PART 2 PRODUCTS

2.1 CONDUIT

.1 In accordance with Section 26 05 34 - Conduits, Conduit Fastenings and Conduit Fittings and Section 27 05 28 – Pathways for Communication Systems for type, size and routing.

2.2 PULLSTRINGS

.1 As indicated in Section 27 05 28, ensure 1 pull-string is left in place in main backbone conduit runs to enable pulling additional conductors/cables in the future after all in-contract cabling has been completed.

2.3 PULL BOXES

.1 Galvanized steel pull boxes sized to above telecommunications standards.

2.4 OUTLET BOXES

.1 Minimum size 100mm x 100mm galvanized steel square boxes complete with single gang mud ring for concealed wall outlets. For all data/voice drop outlets minimum size is 6" x 6". Boxes and their installation shall be such as to ensure cover plates and terminations are properly accommodated.

PART 3 EXECUTION

3.1 INSTALLATION

.1 All conduits and pathways shall have the carrying capacity to "conductor fill" as per above standards.

.2 All pathways for communications whether in-contract or by others to be installed and located in accordance with Section 27 05 28 including pull boxes, number of bends and pull-strings. Coordinate with all sections as noted in 1.4.6 above.

.3 All in-contract communications cabling to be supplied/installed in accordance with Section Section 27 10 05 – Structured Communication Cabling.

.4 Install plywood backboards as indicated and as required to support cables and terminations.

3.2 FIREPROOFING

.1 Provision of all fire stopping required for communications systems and penetration of rated walls, floors and partitions shall be the responsibility of Division 7 unless specifically noted otherwise on the drawings.

END OF SECTION

PART 1 GENERAL

1.1 RELATED SECTIONS

.1 Section 27 05 00 – Common Work Results Communications

.2 Section 27 10 05 – Structured Communications Cabling

1.2 REFERENCES

.1 American National Standards Institute
  .1 ANSI J-STD-607-A-2002, Joint Standard - Commercial Building Grounding (Earthing) and Bonding Requirements for Telecommunications.

.2 Telecommunications Industries Association (TIA)/Electronic Industries Alliance (EIA)
  .1 TIA/EIA-606-2002, Administration Standard for the Commercial Telecommunications Infrastructure.

.3 U.S. Department of Labor/Occupational Safety and Health Administration (OSHA)
  .1 Nationally Recognized Testing Laboratory (NRTL).

1.3 SYSTEM DESCRIPTION

.1 Telecommunications grounding and bonding system consist of grounding busbars, bonding backbones, and other bonding conductors.

.2 Provides ground reference for telecommunications systems within building and bonding at all IT and Electrical rooms.

.3 Metallic pathways, cable shields, conductors, and hardware within telecommunications spaces are bonded to telecommunications grounding and bonding system.

PART 2 PRODUCTS

2.1 TELECOMMUNICATIONS GROUNDING BUSBARS (TGB) AND BONDING SYSTEM

.1 Copper grounding bus-bar in locations as indicated, sized as noted on the drawings to: ANSI J-STD-607-A.

.2 Bonding conductors in IT/Communication Rooms:
  .1 #2 AWG copper conductor, green insulated.

.3 Bonding conductors for cable tray and interconnection to telecommunications room busbar:
  .1 #6 AWG stranded bare copper conductor.

2.2 WARNING LABELS

.1 Non-metallic warning labels in English and French to:ANSI J-STD-607-A.

.2 Identify labels with wording "If this connector is loose or must be removed, please call the building telecommunications manager".

PART 3 EXECUTION

3.1 TELECOMMUNICATIONS GROUNDING BUSBARS (TGB) AND BONDING SYSTEM

.1 Install TGB and associated bonding conductors to racks in locations, and in size and quantity as indicated on the drawings.

.2 Install bonding conductor in telecommunications rooms from busbar to service equipment (power) ground.

.3 Install bonding conductor for from each IT rack outside of telecommunications rooms in cable tray from rack to closest IT room bus-bar or service equipment (power) ground.

.4 Use approved 2 hole compression lugs for connection to TGB.

.5 When placed in ferrous metallic conduit or EMT longer than 1 m, bond conductors to each end of conduit or EMT using grounding bushing.

3.2 LABELLING

.1 Apply warning labels to telecommunications bonding and grounding conductors.

.2 Apply additional administrative labels to: TIA/EIA-606.

END OF SECTION

PART 1 GENERAL

1.1 RELATED SECTIONS

.1 Section 26 05 11 - Direct Buried and Concrete Encased Ductbanks.

.2 Section 26 05 31 - Splitters, Junction, Pull Boxes and Cabinets.

.3 Section 26 05 34 - Conduits, Conduit Fastenings and Conduit Fittings.

.4 Section 27 05 00 – Common Work Results – Communication

.5 Section 27 10 05 – Structured Communication Cabling

1.2 REFERENCE STANDARDS

.1 Canadian Standards Association (CSA International)
- .1 CSA C22.1 – Canadian Electrical Code (23rd Edition)
- .2 CSA-C22.2 No. 214-02, Communications Cables (Bi-National standard with UL 444).
- .3 CSA-C22.2 No. 232, Optical Fiber Cables.

.2 Telecommunications Industry Association (TIA)/Electronic Industries Alliance (EIA)
- .1 TIA/EIA-568-B.3, Optical Fiber Cabling Components Standard.
- .2 EIA/TIA 569-B Standards

1.3 DEFINITIONS

.1 EMT: Electrical Metallic Tubing.

.2 GRC: Galvanized rigid steel conduit.

.3 RNC: Rigid Non-Metallic Conduit

1.4 SYSTEM DESCRIPTION

.1 Telecommunications raceways systems consist of outlet boxes, raceways/conduits, concrete encased ducts, pull boxes, junction boxes/enclosures, caps, fish wires, service fittings, concrete encased ducts.

1.5 SUBMITTALS

.1 Product Data: For wireways and fittings, floor boxes, hinged-cover enclosures, and cabinets.

.2 Shop Drawings: For custom enclosures and cabinets. Include plans, elevations, sections, and attachment details for review and approval with Tenant at time of submission.

.3 Coordination Drawings: Pathway routing plans, drawn to scale, on which the following items are shown and coordinated with each other, using input from installers of items involved:
- .1 Structural members in paths of pathway groups with common supports.
- .2 HVAC and plumbing items and architectural features in paths of conduit groups with common supports.
- .3 Section 26 Electrical and Section 28 Electronic Safety and Security pathways.

PART 2 PRODUCTS

2.1 METAL CONDUITS, TUBING AND FITTINGS

.1 General Requirements for Metal Conduits and Fittings:
- .1 Listed and labeled as defined in CSA C22.1, by a qualified testing agency, and marked for intended location and application.
- .2 Comply with TIA-569-B.

.2 GRC: Comply with ANSI C80.1 and UL 6.

.3 EMT: Comply with ANSI C80.3 and UL 797.

.4 Fittings for Metal Conduit: Comply with NEMA FB 1 and UL 514B.
- .1 Fittings for EMT:
  - .1 Material: Steel.
  - .2 Type: Setscrew.
- .2 Expansion Fittings: PVC or steel to match conduit type, complying with UL 467, rated for environmental conditions where installed, and including flexible external bonding jumper.

.5 Joint Compound for GRC: Approved, as defined in CSA C22.1, by authorities having jurisdiction for use in conduit assemblies, and compounded for use to lubricate and protect threaded conduit joints from corrosion and to enhance their conductivity.

2.2 NONMETALLIC CONDUITS, TUBING AND FITTINGS

.1 General Requirements for Nonmetallic Conduits and Fittings:
- .1 Listed and labeled as defined in CSA C22.1, by a qualified testing agency, and marked for intended location and application.
- .2 Comply with TIA-569-B.

.2 RNC: Type EPC-40-PVC, complying with NEMA TC 2 and UL 651 unless otherwise indicated.
- .1 To be utilized for underground only, installed in accordance with Section 26 05 11 – Concrete and Direct Burial Duct banks where noted/indicated on the drawings

2.3 BOXES, ENCLOSURES, AND CABINETS

.1 General Requirements for Boxes, Enclosures, and Cabinets:
- .1 Comply with TIA-569-B.

.2 Sheet-Metal Outlet and Device Boxes: Comply with NEMA OS 1 and UL 514A.

.3 Cast-Metal Outlet and Device Boxes: Comply with NEMA FB 1, **f**errous alloy, Type FD, with gasketed cover.

.4 Box extensions used to accommodate new building finishes shall be of same material as recessed box.

.5 Small Sheet Metal Pull and Junction Boxes: NEMA OS 1.

.6 Cast-Metal Access, Pull, and Junction Boxes: Comply with NEMA FB 1 and UL 1773, galvanized, cast iron with gasketed cover.

.7 Device Box Dimensions: as required for device to suit installation as noted on the drawings.

.8 Gangable metal boxes are allowed.

.9 Hinged-Cover Enclosures: Comply with UL 50 and NEMA 250, Type 1 with continuous-hinge cover with flush latch unless otherwise indicated.
- .1 Metal Enclosures: Steel, finished inside and out with manufacturer's standard enamel.
- .2 Interior Panels: Steel; all sides finished with manufacturer's standard enamel, space provisioned with conduit entry to suit use or BIX patch panel supplied/installed by Tenant/CBSA IT contractor where indicated on the drawings.

.10 Cabinets:
- .1 NEMA 250, **Type 1**, galvanized-steel box with removable interior panel and removable front, finished inside and out with manufacturer's standard enamel.
- .2 Hinged door in front cover with flush latch and concealed hinge.
- .3 Key latch to match panelboards for Owner Network and VMS, key latch to match CBSA Div. 8 keying standard for all communications cabinets, junction boxes, etc.
- .4 Metal barriers to separate wiring of different systems and voltage.
- .5 Accessory feet where required for freestanding equipment.
- .6 Nonmetallic cabinets shall be listed and labeled as defined in CSA C22.1, by a qualified testing agency, and marked for intended location and application.

PART 3 EXECUTION

3.1 PATHWAY APPLICATION

.1 Outdoors: Apply pathway products as specified below unless otherwise indicated:
- .1 Exposed Conduit: **GRC**
- .2 Concealed Conduit, Aboveground: **GRC**.
- .3 Underground Conduit: **RNC, Type EPC-40-PVC direct buried or concrete encased.**
- .4 Boxes and Enclosures, Aboveground: **NEMA 250, Type 3R**.

.2 Indoors: Apply pathway products as specified below unless otherwise indicated:
- .1 Exposed, Not Subject to Physical Damage: **EMT** in non-public accessible areas, **EMT** where exposed in non-protected public accessible spaces.
- .2 Exposed, Not Subject to Severe Physical Damage: **EMT** in public and non-public areas, no accessible pull boxes.
- .3 Concealed in Ceilings and Interior Walls and Partitions: **EMT**.
- .4 Damp or Wet Locations: **GRC**.
- .5 Pathways for Optical-Fiber or Communications Cable in Spaces Used for Environmental Air: **Plenum-type, optical-fiber-cable pathway where routed in cable tray and transitioned to EMT through solid ceiling spaces**.
- .6 Pathways for Optical-Fiber or Communications-Cable Risers in Vertical Shafts: **EMT**.
- .7 Pathways for Concealed General Purpose Distribution of Optical-Fiber or Communications Cable: **EMT**.
- .8 Boxes and Enclosures: **NEMA 250, Type 1**

.3 Minimum Pathway Size: 27-mm trade size, larger as noted on the drawings or as required to meet BISCI minimum requirements for fill-ratio to suit number of cables indicated on the drawings.

.4 Pathway Fittings: Compatible with pathways and suitable for use and location.
- .1 Rigid Steel Conduit: Use threaded rigid steel conduit fittings unless otherwise indicated. Comply with NEMA FB 2.10.
- .2 EMT: Use setscrew, steel fittings. Comply with NEMA FB 2.10.

.5 Do not install aluminum conduits, boxes, or fittings in contact with concrete or earth.

.6 Install surface pathways only where specifically indicated on Drawings or where approved by Consultant prior to proceeding with work, all pathways to be concealed.

3.2 INSTALLATION

.1 Comply with NECA 1, NECA 101, and TIA-569-B for installation requirements except where requirements on Drawings or in this article are stricter. Comply with NECA 102 for aluminum pathways. Comply with CSA C22.1 limitations for types of pathways allowed in specific occupancies and number of floors.

.2 Keep pathways at least 150 mm away from parallel runs of flues and steam or hot-water pipes. Install horizontal pathway runs above water and steam piping.

.3 Complete pathway installation before starting conductor installation.

.4 Comply with requirements in Section 26 05 29 Hangers and Supports for Electrical Systems for hangers and supports.

.5 Arrange stub-ups so curved portions of bends are not visible above finished slab.

.6 Install no more than the equivalent of two 90-degree bends in any conduit run. Support within 300 mm of changes in direction.

.7 Conceal conduit and EMT within finished walls, ceilings, and floors unless otherwise indicated. Install conduits parallel or perpendicular to building lines and label/colour code as indicated in Section 26 05 00 to suit.

.8 Support conduit within 300 mm of enclosures to which attached.

.9 Pathways Embedded in Slabs:
- .1 Run conduit larger than 27mm trade size, parallel or at right angles to main reinforcement. Where at right angles to reinforcement, place conduit close to slab support. Secure pathways to reinforcement at maximum 3m intervals.
- .2 Arrange pathways to cross building expansion joints at right angles with expansion fittings.
- .3 Arrange pathways to keep a minimum of 25 mm of concrete cover in all directions.
- .4 Do not embed threadless fittings in concrete unless specifically approved by Consultant for each specific location.

.10 Stub-ups to Above Recessed Ceilings:
- .1 Use EMT or GRC for pathways.
- .2 Use a conduit bushing or insulated fitting to terminate stub-ups not terminated in hubs or in an enclosure.

.11 Threaded Conduit Joints, Exposed to Wet, Damp, Corrosive, or Outdoor Conditions: Apply listed compound to threads of pathway and fittings before making up joints. Follow compound manufacturer's written instructions.

.12 Terminate threaded conduits into threaded hubs or with locknuts on inside and outside of boxes or cabinets. Install insulated bushings on conduits terminated with locknuts.

.13 Do not rely on locknuts to penetrate nonconductive coatings on enclosures. Remove coatings in the locknut area prior to conduit assembly to assure a continuous ground path.

.14 Cut conduit perpendicular to the length. For conduits of 53-mm trade size and larger, use roll cutter or a guide to ensure cut is straight and perpendicular to the length.

.15 Install pull wires in empty pathway. Use polypropylene line. Leave at least 300 mm of slack at each end of pull wire. Cap underground pathways designated as spare above grade alongside pathways in use.

.16 Pathways for Optical-Fiber and Communications Cable: Install pathways, metal and nonmetallic, rigid and flexible, as follows:
- .1 27-mm Trade Size and Larger: Install pathways in maximum lengths of 23 m.
- .2 Install with a maximum of two 90-degree bends or equivalent for each length of pathway unless Drawings show stricter requirements. Separate lengths with pull or junction boxes or terminations at distribution frames or cabinets where necessary to comply with these requirements.

.17 Install pathway sealing fittings at accessible locations according to CSA C22.1 and fill them with listed sealing compound. For concealed pathways, install each fitting in a flush steel box with a blank cover plate having a finish similar to that of adjacent plates or surfaces. Install pathway sealing fittings according to CSA C22.1.

.18 Install devices to seal pathway interiors at accessible locations. Locate seals so no fittings or boxes are between the seal and the following changes of environments. Seal the interior of all pathways at the following points:
- .1 Where conduits pass from warm to cold locations, such as boundaries of refrigerated spaces.
- .2 Where an underground service pathway enters a building or structure.
- .3 Where otherwise required by CSA C22.1.

.19 Comply with manufacturer's written instructions for solvent welding PVC conduit and fittings.

.20 Expansion-Joint Fittings:
- .1 Install in each run of aboveground RMC and EMT conduit that is located where environmental temperature change may exceed 55 deg C and that has straight-run length that exceeds 30m.
- .2 Install type and quantity of fittings that accommodate temperature change listed for each of the following locations:
  - .1 Outdoor Locations Not Exposed to Direct Sunlight: 70 deg C temperature change.
  - .2 Outdoor Locations Exposed to Direct Sunlight: 86 deg C temperature change.
  - .3 Indoor Spaces Connected with Outdoors without Physical Separation: 70 deg C temperature change.
- .3 Install fitting(s) that provide expansion and contraction for at least 0.06 mm per meter of length of straight run per deg C of temperature change for PVC conduits. Install fitting(s) that provide expansion and contraction for at least 0.0115 mm per meter of length of straight run per deg C of temperature change for metal conduits.
- .4 Install expansion fittings at all locations where conduits cross building or structure expansion joints.
- .5 Install each expansion-joint fitting with position, mounting, and piston setting selected according to manufacturer's written instructions for conditions at specific location at time of installation. Install conduit supports to allow for expansion movement.

.21 Mount boxes or devices at heights indicated on Drawings. If mounting heights of boxes are not individually indicated, give priority to ADA requirements and confirm with Consultant.

.22 Recessed Boxes in Masonry Walls: Saw-cut opening for box in center of cell of masonry block, and install box flush with surface of wall. Prepare block surface to provide a flat surface for a raintight connection between box and cover plate or supported equipment and box.

.23 Horizontally separate boxes mounted on opposite sides of walls so they are not in the same vertical channel.

.24 Support boxes of three gangs or more from more than one side by spanning two framing members or mounting on brackets specifically designed for the purpose.

.25 Fasten junction and pull boxes to or support from building structure. Do not support boxes by conduits.

.26 Set metal floor boxes level and flush with finished floor surface.

3.3 SLEEVE AND SLEEVE-SEAL INSTALLATION FOR ELECTRONIC SAFETY AND SECURITY PENETRATIONS

.1 Install sleeves and sleeve seals at penetrations of exterior, floor and wall assemblies.

3.4 FIREPROOFING

.1 Provision of all fire-stopping required for pathway penetrations of rated walls, floors and partitions shall be the responsibility of Division 7.

3.5 PROTECTION

.1 Protect coatings, finishes, and cabinets from damage and deterioration.
- .1 Repair damage to galvanized finishes with zinc-rich paint recommended by manufacturer.
- .2 Repair damage to paint finishes with matching touchup coating recommended by manufacturer.
- .3

END OF SECTION

PART 1 GENERAL

1.1 RELATED SECTIONS

.1 Section 27 05 00 – Common Work Results For Communications

.2 Section 27 05 28 – Pathways for Communication Systems

1.2 REFERENCES

.1 Canadian Standards Association (CSA International)
- .1 CSA C22.1 – Canadian Electrical Code (23rd Edition)
- .2 CSA-C22.2 No. 214-02, Communications Cables (Bi-National standard with UL 444).
- .3 CSA-C22.2 No. 232-M1988(R2004), Optical Fiber Cables.

.2 Telecommunications Industry Association (TIA)/Electronic Industries Alliance (EIA)
- .1 TIA/EIA-568-B.1-(2001), Commercial Building Telecommunications Cabling Standard, Part 1: General Requirements.
- .2 TIA/EIA-568-B.2-(2001), Commercial Building Telecommunications Cabling Standard, Part 2: Balanced Twisted-Pair Cabling Components.
- .3 TIA/EIA-568-B.3-(2000), Optical Fiber Cabling Components Standard.
- .4 TIA/EIA-606-A-(2002), Administration Standard for the Commercial Telecommunications Infrastructure.
- .5 TIA TSB-140-2004, Telecommunications Systems Bulletin - Additional Guidelines for Field-Testing Length, Loss and Polarity of Optical Fiber Cabling Systems.
- .6 TIA-598-C-(2005), Optical Fiber Cable Color Coding.

1.3 DEFINITIONS

.1 Refer to TIA/EIA-598-C, Annex A for definitions of terms: optical-fiber interconnect, distribution, and breakout cables.

1.4 SYSTEM DESCRIPTION

.1 Structured telecommunications wiring system consist of unshielded-twisted-pair and optical fiber cables, terminations, connectors, cross-connection hardware and related equipment installed inside building for Owner telecommunications systems, including voice (telephone), data..

1.5 SUBMITTALS

.1 Provide submittals in accordance with Section 01 33 00 - Submittal Procedures.

.2 Provide project as-built records and drawings.

1.6 QUALITY ASSURANCE

.1 Testing Agency's Field Supervisor: Currently certified by BICSI as an RCDD to supervise on-site testing.

1.7 DELIVERY, STORAGE AND HANDLING

.1 Test cables upon receipt at Project site.

1. Test optical fiber cable to determine the continuity of the strand end to end. Use optical fiber flashlight or optical loss test set.
2. Test optical fiber cable on reels. Use an optical time domain reflectometer to verify the cable length and locate cable defects, splices, and connector; include the loss value of each. Retain test data and include the record in maintenance data.
3. Test each pair of UTP cable for open and short circuits.

PART 2 PRODUCTS

2.1 FOUR-PAIR 100 Ê BALANCED TWISTED PAIR CABLE

.1 Four-pair, 100 ohm balanced unshielded-twisted-pair (UTP) cable, flame test classification FT6 to: CSA-C22.2 No. 214, Category 6 (Cat 6) to: TIA/EIA-568-B.2.

2.2 MULTI-PAIR 100 Ê BALANCED TWISTED PAIR CABLE

.1 100 ohm, pairs, sheath consists of thermoplastic jacket with underlying metallic shield, Category 3 to: TIA/EIA-568-B.2, flame test classification FT4 to: CSA-C22.2 No. 214.

2.3 WORK AREA UTP 4-PAIR MODULAR JACK

.1 Eight-position modular jack ("RJ-45"), type T568B Category 6 to: TIA/EIA-568- B.2:
- .1 In self-contained surface or recessed-mount box, jacks per box as indicated on the drawings.
- .2 Mounted in compatible single or double gang faceplate, flush entry, jack positions per faceplate.

2.4 TERMINATION AND CROSS-CONNECTION HARDWARE FOR UTP

.1 IDC Terminal strips, 25 pair, for terminating multi 4 pair 100 ê balanced twisted pair cables and supporting cross-connections using jumper wires or compatible plug-ended patch cords: Category 6 to: TIA/EIA-568-B.2.

.2 Mount or block for housing 12 IDC terminal strips, mounted on plywood backboard on wall in Electrical 1604.
- .1 Distribution rings or channels capable of externally mating with the above mount for managing cross-connection wires.

.3 Patch panel, rack units high, ports:
- .1 Each port equipped with factory installed "RJ-45" jacks, type T568B Category 6 to: TIA/EIA-568-B.2.
- .2 Horizontal cable-management unit for every 48 ports.

.4 Cables extending to work areas terminate on RJ-45 jacks, type T568B. Category 6 to: TIA/EIA-568-B.2.

2.5 UTP CROSS-CONNECT WIRE

.1 Category 6, 4 pairs to: TIA/EIA-568-B.2.

2.6 UTP PATCH CORDS

.1 Length as required to suit 1:1 patching of all in-contract network equipment, colour coded, factory-installed male plug at one end to mate with "RJ-45" jack and with factory-installed male plug at other end to mate with "RJ-45" jack Category 6, 4 pairs to: TIA/EIA-568-B.2.

2.7 UTP EQUIPMENT CABLE

.1 4 pair "pigtail", 3 metres long, colour coded, with factory-installed male plug on one end to mate with "RJ-45" jack and other end equipped with factory-installed male plug to mate with "RJ-45" jack Category 6 to: TIA/EIA-568-B.2.

PART 3 EXECUTION

3.1 INSTALLATION OF TERMINATION AND CROSS-CONNECT HARDWARE

.1 Install termination and cross-connect hardware on wall and in rack as indicated and according to manufacturers' instructions. Identify and label as indicated to: TIA/EIA-606-A.

.2 Install consolidation points, as indicated according to manufacturer's instructions. Identify and label as indicated to: TIA/EIA-606-A.

3.2 INSTALLATION OF HORIZONTAL DISTRIBUTION CABLES

.1 Install horizontal cables as indicated in conduits and cable trays from Electrical and M/E rooms to consolidation point individual work-area jacks MUTOA. Identify and label as indicated to: TIA/EIA-606-A.

.2 Support horizontal cables at intervals not exceeding 2 metres where not installed in conduit.
- .1 Where raceways and building cable tray are used to distribute cables to each zone, provide supplementary "J" hooks to support cables at intervals not exceeding 2 metres in private accessible ceiling spaces only, all other areas to have conduit direct to tray for network cabling.

.3 Install horizontal cables in conduit as indicating on the drawings from consolidation point to individual work-area jacks.
- .1 Identify and label as indicated to: TIA/EIA-606-A.

.4 Terminate horizontal cables in locations as indicated on the drawings.
- .1 Identify and label as indicated to: TIA/EIA-606-A.

.5 Coil spare cables and store in ceiling space in zone.

.6 Harness slack cable in cabinets, racks, and wall-mounted termination and cross-connection hardware.

3.3 INSTALLATION OF BACKBONE CABLES

.1 Install backbone cables as indicated and according to manufacturers' instructions and approved shop drawing submittal(s).
- .1 Identify and label as indicated to: TIA/EIA-606-A.

.2 All copper backbone cabling to be as indicated
- .1 Identify and label as indicated to: TIA/EIA-606-A.

3.4 INSTALLATION OF EQUIPMENT CABLES

.1 Install equipment cables from equipment patch panel as indicated.
  .1 Identify and label as indicated to: TIA/EIA-606-A.

3.5 IMPLEMENT CROSS-CONNECTIONS

.1 Implement cross-connections using patch cords as specified.

3.6 FIELD QUALITY CONTROL

.1 Test horizontal UTP cables as specified below and correct deficiencies provide record of results as hard copy and electronic record on CD.
  .1 Perform tests for Permanent Link on installed cables, including spares:
    .1 Category 6 using certified level III tester to: TIA/EIA-568-B.2.
  .2 Perform tests for Channel on all of cross-connected data horizontal cabling installed.
    .1 Category 6 using certified level III tester to: TIA/EIA-568-B.2.

.2 Test backbone UTP cables as specified below and correct deficiencies: provide record of results as hard copy and electronic record on CD.
  .1 Perform tests for Permanent Link on 4-pair cables:
    .1 Category 5e using certified level IIe tester to: TIA/EIA-568-B.1.
    .2 Category 6 using certified level III tester to: TIA/EIA-568-B.2.
  .2 Perform Wire Map tests on multi-pair UTP cables to: TIA/EIA-568-B.1.

.3 Test Optical-fiber strands for attenuation to: TIA/EIA-568-B.1 and correct deficiencies: provide record of results as hard copy and electronic record on CD.
  .1 Test horizontal links need at only one wavelength (850 nm or 1300 nm) and in one direction.
    .1 Attenuation to be less than 2.0 dB, unless consolidation point is used.
    .2 If consolidation point is used, attenuation test result to be less than 2.75 dB when testing between horizontal cross-connect and telecommunications outlet/connector.
  .2 Test backbone links in both directions. Backbone links:
    .1 Test multi-mode fiber at both applicable wavelengths (850 nm and 1300 nm).
    .2 Test single-mode fiber at both applicable wavelengths (1550 nm and 1310 m).
  .3 Maximum attenuation: Cable attenuation + Connector loss + Splice loss.
    .1 Multi-mode-fiber attenuation coefficients:
      .1 3.5 db/km @ 850 nm; and
      .2 1.5 db km @ 1300 nm
    .2 Single-mode fiber attenuation coefficients at both 1310 nm and 1550 nm:
      .1 1.0 db/km for inside plant cable; and
      .2 0.5 db/km for outside plant cables.
    .3 Maximum connector insertion loss: 0.75 db per pair and maximum splice insertion loss: 0.3 db.

.4 Perform additional Tier 2 tests using optical time domain reflectometer (OTDR) on horizontal and backbone fiber pairs to: TSB-140.
  .1 Correct deficiencies.
  .2 Provide record of results as described in SUBMITTALS.

.5 Provide record of results as hard copy and electronic record on CD to: TIA/TSB-140.

PART 1 GENERAL

1.1 MEASUREMENT PROCEDURES

.1 Excavated materials will be measured in cubic metres in their original location.
- .1 Common excavation quantities measured will be actual volume removed within following limits:
  - .1 Width for trench excavation as indicated.
  - .2 Width for excavation for structures as indicated.
  - .3 Depth from ground elevation and surface of pavement immediately prior to excavation, to elevation as directed by Consultant.
- .2 Rock quantities measured will be actual volume removed within following limits:
  - .1 Width for trench excavation as indicated.
  - .2 Width for excavation for structures to be bounded by vertical planes up to 500 mm outside of and parallel to neat lines of footings as indicated.
  - .3 Depth from rock surface elevations immediately prior to excavation, to elevation as indicated.
  - .4 Where design elevation is less than 300 mm below original rock surface, depth will be considered to be 300 mm below original rock surface.
  - .5 Volume of individual boulders and rock fragments will be determined by measuring three maximum mutually perpendicular dimensions.

.2 Sheeting and bracing left in place on direction of Consultant will be measured in square metres of surface area of plane surface of sheeting.

.3 Shoring, bracing, cofferdams, underpinning and de-watering of excavation will not be measured separately for payment.

.4 Backfilling to authorized excavation limits will be measured in cubic metres compacted in place for each type of material specified.

.5 Placing and spreading of topsoil will be measured for payment in cubic metres calculated from cross sections taken in area of excavation from original location.
- .1 If double handling of topsoil is directed by Consultant (stockpiling and later placing), then quantities will be measured twice; on excavation from original location and on excavation from stockpile.

1.2 REFERENCE STANDARDS

.1 ASTM International (ASTM)
- .1 ASTM C 117-04, Standard Test Method for Material Finer than 0.075 mm (No.200) Sieve in Mineral Aggregates by Washing.
- .2 ASTM C 136-05, Standard Test Method for Sieve Analysis of Fine and Coarse Aggregates.
- .3 **ASTM D 422-632002**, Standard Test Method for Particle-Size Analysis of Soils.
- .4 ASTM D 698-00ae1, Standard Test Methods for Laboratory Compaction Characteristics of Soil Using Standard Effort (12,400 ft-lbf/ft ^{3}) (600 kN-m/m ^{3}).
- .5 ASTM D 1557-02e1, Standard Test Methods for Laboratory Compaction Characteristics of Soil Using Modified Effort (56,000 ft-lbf/ft ^{3}) (2,700 kN-m/m ^{3}).
- .6 ASTM D 4318-05, Standard Test Methods for Liquid Limit, Plastic Limit, and Plasticity Index of Soils.

.2 Canadian General Standards Board (CGSB)
- .1 CAN/CGSB-8.1-88, Sieves, Testing, Woven Wire, Inch Series.
- .2 CAN/CGSB-8.2-M88, Sieves, Testing, Woven Wire, Metric.

.3 Canada Green Building Council (CaGBC)
- .1 LEED Canada-NC Version 1.0-2004, LEED (Leadership in Energy and Environmental Design): Green Building Rating System Reference Package For New Construction and Major Renovations (including Addendum 2007).

.4 CSA Group (CSA)
- .1 CAN/CSA-A3000-03, Cementitious Materials Compendium (Consists of A3001, A3002, A3003, A3004 and A3005).
  - .1 **CSA-A3001-03**, Cementitious Materials for Use in Concrete.
- .2 CSA-A23.1/A23.2-04, Concrete Materials and Methods of Concrete Construction/Methods of Test and Standard Practices for Concrete.

.5 United States Environmental Protection Agency (EPA)/Office of Water
- .1 EPA 832R92005, Storm Water Management for Construction Activities: Developing Pollution Prevention Plans and Best Management Practices.

1.3 DEFINITIONS

.1 Excavation classes: two classes of excavation will be recognized; common excavation and rock excavation.
- .1 Rock: solid material in excess of 1.00 m ³ and which cannot be removed by means of heavy duty mechanical excavating equipment with 0.95 to 1.15 m³ bucket. Frozen material not classified as rock.
- .2 Common excavation: excavation of materials of whatever nature, which are not included under definitions of rock excavation.

.2 Unclassified excavation: excavation of deposits of whatever character encountered in Work.

.3 Topsoil:
- .1 Material capable of supporting good vegetative growth and suitable for use in top dressing, landscaping and seeding.
- .2 Material reasonably free from subsoil, clay lumps, brush, objectionable weeds, and other litter, and free from cobbles, stumps, roots, and other objectionable material larger than 25 millimeters in any dimension.

.4 Waste material: excavated material unsuitable for use in Work or surplus to requirements.

.5 Borrow material: material obtained from locations outside area to be graded, and required for construction of fill areas or for other portions of Work.

.6 Recycled fill material: material, considered inert, obtained from alternate sources and engineered to meet requirements of fill areas.

.7 Unsuitable materials:
- .1 Weak, chemically unstable, and compressible materials.
- .2 Frost susceptible materials:
  - .1 Fine grained soils with plasticity index less than 10 when tested to ASTM D 4318, and gradation within limits specified when tested to ASTM C 136: Sieve sizes to CAN/CGSB-8.1
  - .2 Table:

Sieve Designation	% Passing
2.00 mm	100
0.10 mm	45 - 100
0.02 mm	10 - 80
0.005 mm	0 - 45

  - .3 Coarse grained soils containing more than 20 % by mass passing 0.075 mm sieve.

.8 Unshrinkable fill: very weak mixture of cement, concrete aggregates and water that resists settlement when placed in utility trenches, and capable of being readily excavated.

1.4 ACTION AND INFORMATIONAL SUBMITTALS

.1 Make submittals in accordance with Section 01 33 00 - Submittal Procedures.

.2 Quality Control: in accordance with Section 01 45 00 - Quality Control:
- .1 Submit condition survey of existing conditions as described in EXISTING CONDITIONS article of this Section.
- .2 Submit for review by Consultant proposed dewateringandheave prevention methods as described in PART 3 of this Section.
- .3 Submit to Consultant written notice at least 7 days prior to excavation work, to ensure cross sections are taken.
- .4 Submit to Consultant written notice when bottom of excavation is reached.
- .5 Submit to Consultanttesting, inspection results andreport as described in PART 3 of this Section.

.3 Preconstruction Submittals:
- .1 Submit construction equipment list for major equipment to be used in this section prior to start of Work.
- .2 Submit records of underground utility locates, indicating: location plan of existing utilities as found in field.

.4 Samples:
- .1 Submit samples in accordance with Section 01 33 00 - Submittal Procedures.
- .2 Inform Consultant at least 4 weeks prior to beginning Work, of proposed source of fillunshrinkable fill materials and provide access for sampling.
- .3 Submit 70 kg samples of each type of specified material.
- .4 Ship samples to Consultant, in tightly closed containers to prevent contamination and exposure to elements.
- .5 At least 4 weeks prior to beginning Work, inform Consultant source of fly ash and submit samples to Consultant.
  - .1 Do not change source of Fly Ash without written approval of Consultant.

1.5 QUALITY ASSURANCE

.1 Qualification Statement: submit proof of insurance coverage for professional liability.

.2 Where Consultant is employee of Contractor, submit proof that Work by Consultant is included in Contractor's insurance coverage.

.3 Submit design and supporting data at least 2 weeks prior to beginning Work.

.4 Design and supporting data submitted to bear stamp and signature of qualified professional engineer registered or licensed in Province of Ontario, Canada.

.5 Keep design and supporting data on site.

.6 Engage services of qualified professional Engineer who is registered or licensed in Province of Ontario, Canada in which Work is to be carried out to design and inspect cofferdams, shoring, bracing and underpinning required for Work.

.7 Do not use soil material until written report of soil test results are reviewedandapproved by Consultant.

.8 Health and Safety Requirements:

.1 Do construction occupational health and safety in accordance with Section 01 35 29.06 - Health and Safety Requirements.

1.6 WASTE MANAGEMENT AND DISPOSAL

.1 Separate waste materials for reuseandrecycling in accordance with Section 01 74 19 - Waste Management and Disposal.

.2 Divert excess aggregate materials from landfill to local recycling facility for reuse as directed by Consultant.

1.7 EXISTING CONDITIONS

.1 Buried services:
- .1 Before commencing work verify location of buried services on and adjacent to site.
- .2 Arrange with appropriate authority for relocation of buried services that interfere with execution of work: pay costs of relocating services.
- .3 Remove obsolete buried services within 2 m of foundations: cap cut-offs.
- .4 Size, depth and location of existing utilities and structures as indicated are for guidance only. Completeness and accuracy are not guaranteed.
- .5 Prior to beginning excavation Work, notify applicable Consultant and authorities having jurisdiction establish location and state of use of buried utilities and structures. Authorities having jurisdiction to clearly mark such locations to prevent disturbance during Work.
- .6 Confirm locations of buried utilities by careful test excavations.
- .7 Maintain and protect from damage, water, sewer, gas, electric, telephone and other utilities and structures encountered as indicated.
- .8 Where utility lines or structures exist in area of excavation, obtain direction of Consultant before removing. Costs for such Work to be paid by Owner.
- .9 Record location of maintained, re-routed and abandoned underground lines.
- .10 Confirm locations of recent excavations adjacent to area of excavation.

.2 Existing buildings and surface features:
- .1 Conduct, with Consultant, condition survey of existing buildings, trees and other plants, lawns, fencing, service poles, wires, rail tracks, pavement, survey bench marks and monuments which may be affected by Work.
- .2 Protect existing buildings and surface features from damage while Work is in progress. In event of damage, immediately make repair as directed by Consultant

PART 2 PRODUCTS

2.1 MATERIALS

.1 Type 1 and Type 2 fill: properties to the following requirements:
- .1 Crushed, pit run or screened stone, gravel or sand.
- .2 Gradations to be within limits specified when tested toASTM C 117. Sieve sizes to CAN/CGSB-8.1.
- .3 Table:

Sieve Designation	% Passing Type 1	% Passing Type 2
75 mm	-	100
50 mm	-	-
37.5 mm	-	-
25 mm	100	-
19 mm	75-100	-
12.5 mm	-	-

9.5 mm	50-100	-
4.75 mm	30-70	22-85
2.00 mm	20-45	-
0.425 mm	10-25	5-30
0.180 mm	-	-
0.075 mm	3-8	0-10

.2 Type 3 fill: selected material from excavation or other sources, approved by Consultant for use intended, unfrozen and free from rocks larger than 75 mm, cinders, ashes, sods, refuse or other deleterious materials.

.3 Unshrinkable fill: proportioned and mixed to provide:
- .1 Maximum compressive strength of 0.4 MPa at 28 days.
- .2 Maximum cement content of 25 kg/m ³with 40% by volume fly ash replacement: to **CSA-A3001**, Type GU.
- .3 Minimum strength of 0.07 MPa at 24 h.
- .4 Concrete aggregates: to CSA-A23.1/A23.2.
- .5 Cement: Type GU.
- .6 Slump: 160 to 200 mm.

.4 Shearmat: honeycomb type bio-degradable cardboard 100 mm thick, treated to provide sufficient structural support for poured concrete until concrete cured.

PART 3 EXECUTION

3.1 TEMPORARY EROSION AND SEDIMENTATION CONTROL

.1 Provide temporary erosion and sedimentation control measures to prevent soil erosion and discharge of soil-bearing water runoff or airborne dust to adjacent properties and walkways, according to requirements of authorities having jurisdictionsediment and erosion control drawingssediment and erosion control plan, specific to site, that complies with EPA 832/R-92-005 or requirements of authorities having jurisdiction, whichever is more stringent.

.2 Inspect, repair, and maintain erosion and sedimentation control measures during construction until permanent vegetation has been established.

.3 Remove erosion and sedimentation controls and restore and stabilize areas disturbed during removal.

3.2 SITE PREPARATION

.1 Remove obstructions, ice and snow, from surfaces to be excavated within limits indicated.

.2 Cut pavement or sidewalk neatly along limits of proposed excavation in order that surface may break evenly and cleanly.

3.3 PREPARATION/ PROTECTION

.1 Protect existing features in accordance with applicable local regulations.

.2 Keep excavations clean, free of standing water, and loose soil.

.3 Where soil is subject to significant volume change due to change in moisture content, cover and protect to Consultant approval.

.4 Protect natural and man-made features required to remain undisturbed. Unless otherwise indicated or located in an area to be occupied by new construction, protect existing trees from damage.

.5 Protect buried services that are required to remain undisturbed.

3.4 STRIPPING OF TOPSOIL

.1 Begin topsoil stripping of areas as indicated after area has been cleared of brush,weedsandgrasses and removed from site.

.2 Strip topsoil to depths as indicated.
.1 Do not mix topsoil with subsoil.

.3 Stockpile in locations as indicated.
.1 Stockpile height not to exceed 2 m and should be protected from erosion.

.4 Dispose of unused topsoil off site.

3.5 STOCKPILING

.1 Stockpile fill materials in areas designated by Consultant.
.1 Stockpile granular materials in manner to prevent segregation.

.2 Protect fill materials from contamination.

.3 Implement sufficient erosion and sediment control measures to prevent sediment release off construction boundaries and into water bodies.

3.6 COFFERDAMS, SHORING, BRACING AND UNDERPINNING

.1 Maintain sides and slopes of excavations in safe condition by appropriate methods and in accordance with Section 01 35 29.06 - Health and Safety Requirements,Health and Safety Act for the Province of Ontario.
.1 Where conditions are unstable, Consultant to verify and advise methods.

.2 Obtain permit from authority having jurisdiction for temporary diversion of water course.

.3 Construct temporary Works to depths, heights and locations as indicatedordirected by Consultantapproved by Consultant.

.4 During backfill operation:
.1 Unless otherwise indicated or directed by Consultant, remove sheeting and shoring from excavations.
.2 Do not remove bracing until backfilling has reached respective levels of such bracing.
.3 Pull sheeting in increments that will ensure compacted backfill is maintained at elevation at least 500 mm above toe of sheeting.

.5 When sheeting is required to remain in place, cut off tops at elevations as indicated.

.6 Upon completion of substructure construction:
.1 Remove cofferdams, shoring and bracing.
.2 Remove excess materials from site and restore watercourses as indicatedandas directed by Consultant.

3.7 DEWATERING AND HEAVE PREVENTION

.1 Keep excavations free of water while Work is in progress.

.2 Provide for Consultant'sreview details of proposed dewatering or heave prevention methods, including dikes, well points, and sheet pile cut-offs.

.3 Avoid excavation below groundwater table if quick condition or heave is likely to occur.
.1 Prevent piping or bottom heave of excavations by groundwater lowering, sheet pile cut-offs, or other means.

.4 Protect open excavations against flooding and damage due to surface run-off.

.5 Dispose of water in accordance with Section 01 35 43 - Environmental Procedures to approved collection and in manner not detrimental to public and private property, or portion of Work completed or under construction.
.1 Provide and maintain temporary drainage ditches and other diversions outside of excavation limits.

.6 Provide flocculation tanks, settling basins, or other treatment facilities to remove suspended solids or other materials before discharging to storm sewers, watercourses or drainage areas.

3.8 EXCAVATION

.1 Advise Consultant at least 7 days in advance of excavation operations for initial cross sections to be taken.

.2 Excavate to lines, grades, elevations and dimensions as indicated.

.3 Remove concrete, masonry,paving,walks,demolished foundations and rubble and other obstructions encountered during excavation.

.4 Excavation must not interfere with bearing capacity of adjacent foundations.

.5 Do not disturb soil within branch spread of trees or shrubs that are to remain.
.1 If excavating through roots, excavate by hand and cut roots with sharp axe or saw.

.6 For trench excavation, unless otherwise authorized by Consultant in writing, do not excavate more than 30 m of trench in advance of installation operations and do not leave open more than 15 m at end of day's operation.

.7 Keep excavated and stockpiled materials safe distance away from edge of trench as directed by Consultant.

.8 Restrict vehicle operations directly adjacent to open trenches.

.9 Dispose of surplus and unsuitable excavated material off site.

.10 Do not obstruct flow of surface drainage or natural watercourses.

.11 Earth bottoms of excavations to be undisturbed soil, level, free from loose, soft or organic matter.

.12 Notify Consultant when bottom of excavation is reached.

.13 Obtain Consultant approval of completed excavation.

.14 Remove unsuitable material from trench bottom including those that extend below required elevations to extent and depth as directed by Consultant.

.15 Correct unauthorized over-excavation as follows:
.1 Fill under bearing surfaces and footings withfill concrete Type 2 fill compacted to not less than

100% of corrected Standard Proctor maximum dry density.

.2 Fill under other areas with Type 2 fill compacted to not less than 95 % of corrected Standard Proctor maximum dry density.

.16 Hand trim, make firm and remove loose material and debris from excavations.

.1 Where material at bottom of excavation is disturbed, compact foundation soil to density at least equal to undisturbed soil.

.2 Clean out rock seams and fill with concrete mortar or grout to approval of Consultant.

3.9 FILL TYPES AND COMPACTION

.1 Use types of fill as indicated or specified below. Compaction densities are percentages of maximum densities obtained from ASTM D 698.

.1 Exterior side of perimeter walls: use Type 3 fill to subgrade level. Compact to 95% of corrected maximum dry density.

.2 Within building area: use Type 2 to underside of base course for floor slabs. Compact to 100 % of corrected maximum dry density.

.3 Under concrete slabs: provide 150 mm compacted thickness base course of Type 1 fill topped with shearmat filler as indicated to underside of slab. Compact base course to 100 %.

.4 Retaining walls: use Type 2 fill to subgrade level on high side for minimum 500 mm from wall and compact to 95 %. For remaining portion, use Type 3 fill compacted to 95 %.

.5 Place unshrinkable fill in areas as indicated.

3.10 BEDDING AND SURROUND OF UNDERGROUND SERVICES

.1 Place and compact granular material for bedding and surround of underground services as indicated.

.2 Place bedding and surround material in unfrozen condition.

3.11 BACKFILLING

.1 Do not proceed with backfilling operations until completion of following:

.1 Consultant has inspected and approved installations.

.2 Consultant has inspected and approved of construction below finish grade.

.3 Inspection, testing, approval, and recording location of underground utilities.

.4 Removal of concrete formwork.

.5 Removal of shoring and bracing; backfilling of voids with satisfactory soil material.

.2 Areas to be backfilled to be free from debris, snow, ice, water and frozen ground.

.3 Do not use backfill material which is frozen or contains ice, snow or debris.

.4 Place backfill material in uniform layers not exceeding 150 mm compacted thickness up to grades indicated. Compact each layer before placing succeeding layer.

.5 Backfilling around installations:

.1 Place bedding and surround material as specified elsewhere.

.2 Do not backfill around or over cast-in-place concrete within 24 hours after placing of concrete.

.3 Place layers simultaneously on both sides of installed Work to equalize loading.

.4 Where temporary unbalanced earth pressures are liable to develop on walls or other structures:

.1 Permit concrete to cure for minimum 14 days or until it has sufficient strength to withstand earth and compaction pressure and approval obtained from Consultantor:

.2 If approved by Consultant, erect bracing or shoring to counteract unbalance, and leave in place until removal is approved by Consultant.

.6 Place recycled fill in areas as indicated.

.7 Consolidate and level unshrinkable fill with internal vibrators.

.8 Install drainage system in backfill as indicated.

3.12 RESTORATION

.1 Upon completion of Work, remove waste materials and debris in accordance to Section 01 74 19 - Waste Management and Disposal, trim slopes, and correct defects as directed by Consultant.

.2 Replace topsoil as indicated.

.3 Reinstate lawns to elevation which existed before excavation.

.4 Reinstate pavements and sidewalks disturbed by excavation to thickness, structure and elevation which existed before excavation.

.5 Clean and reinstate areas affected by Work as directed by Consultant.

.6 Use temporary plating to support traffic loads over unshrinkable fill for initial 24 hours.

.7 Protect newly graded areas from traffic and erosion and maintain free of trash or debris.

END OF SECTION

PART 1 GENERAL

1.1 REFERENCE STANDARDS

.1 Agriculture and Agri-Food Canada
- .1 The Canadian System of Soil Classification, Third Edition, 1998.

.2 Canadian Council of Ministers of the Environment (CCME)
- .1 PN1340-2005, Guidelines for Compost Quality.

.3 United States Environmental Protection Agency (EPA), Office of Water
- .1 EPA-833-R-06-004, Developing Your Stormwater Pollution Prevention Plan, A Guide for Construction Sites

.4 Canadian Society of Landscape Architects (CSLA)/Canadian Nursery Landscape Association (CNLA)
- .1 Canadian Landscape Standard 2016, First Edition
- .2 Canadian Nursery Stock Standard 2017, Ninth Edition

1.2 DEFINITIONS

.1 Compost:
- .1 Mixture of soil and decomposing organic matter used as fertilizer, mulch, or soil amendment.
- .2 Compost is processed organic matter containing 40% or more organic matter as determined by Walkley-Black or Loss On Ignition (LOI) test.
- .3 Product must be sufficiently decomposed (i.e. stable) so that any further decomposition does not adversely affect plant growth (C:N ratio below 25), and contain no toxic or growth inhibiting contaminates.
- .4 Composed bio-solids to: CCME Guidelines for Compost Quality, Category A.

1.3 ACTION AND INFORMATIONAL SUBMITTALS

.1 Provide submittals in accordance with Section 01 33 00 - Submittal Procedures.

.2 Quality control submittals:
- .1 Soil testing: submit certified test reports showing compliance with specified performance characteristics and physical properties as described in PART 2 - SOURCE QUALITY CONTROL.
- .2 Certificates: submit product certificates signed by manufacturer certifying materials comply with specified performance characteristics and criteria and physical requirements.

1.4 QUALITY ASSURANCE

.1 Pre-installation meetings: conduct pre-installation meeting to verify project requirements, installation instructions and warranty requirements in accordance with Section 01 32 16 - Construction Progress Schedule - Critical Path Method (CPM.

.2 Qualifications: Provide proof of qualifications when requested by Consultant.

.3 Contractor Qualifications:
- .1 Landscape Contractor: to be a Member in Good Standing of International Society of Arboriculture, Canadian Nursery Landscape Association, Landscape Ontario Green for Life (LO).
- .2 Landscape Supervisor: Landscape Horticulturist Journeyperson or Landscape Industry Certified Technician with Softscape Installation designation or equivalent.

1.5 WASTE MANAGEMENT AND DISPOSAL

.1 Separate waste materials for reuse and recycling in accordance with Section 01 74 19 - Waste Management and Disposal.

.2 Divert unused soil amendments from landfill to official hazardous material collections site approved by Consultant.

.3 Do not dispose of unused soil amendments into sewer systems, into lakes, streams, onto ground or in locations where it will pose health or environmental hazard.

PART 2 PRODUCTS

2.1 TOPSOIL

.1 Topsoil for seeded areas and planting beds: mixture of particulates, micro-organisms and organic matter which provides suitable medium for supporting intended plant growth.
- .1 Soil texture based on The Canadian System of Soil Classification, to consist of 20 to 70% sand, minimum 7% clay, and contain 2 to 10% organic matter by weight.
- .2 Contain no toxic elements or growth inhibiting materials.
- .3 Finished surface free from:
  - .1 Debris and stones over 50 mm diameter.
  - .2 Coarse vegetative material, 10 mm diameter and 100 mm length, occupying more than 2% of soil volume.
- .4 Consistency: friable when moist.

2.2 SOIL AMENDMENTS

.1 Fertilizer:
- .1 Fertility: major soil nutrients present in following amounts:
- .2 Nitrogen (N): 20 to 40 micrograms of available N per gram of topsoil.
- .3 Phosphorus (P): 40 to 50 micrograms of phosphate per gram of topsoil.
- .4 Potassium (K): 75 to 110 micrograms of potassium per gram of topsoil.
- .5 Calcium, magnesium, sulphur and micro-nutrients present in balanced ratios to support germination and/or establishment of intended vegetation.
- .6 pH range of 6.5 to 8.0.

.2 Peatmoss:
- .1 Derived from partially decomposed species of horticultural grade Sphagnum Mosses.
- .2 Texture ranging from porous to spongy fibrous, fairly elastic, and substantially homogeneous.
- .3 Free of wood and deleterious material which could prohibit growth.
- .4 Shredded particle minimum size: 5 mm.
- .5 pH range of 3.5 to 6.5.

.3 Sand: washed coarse silica sand, medium to coarse textured.

.4 Organic matter: compost Category A, B in accordance with CCME PN1340, unprocessed organic matter, such as rotted manure, hay, straw, bark residue or sawdust, meeting the organic matter, stability and contaminant requirements.

.5 Use composts meeting Category B in accordance with CCME requirements for landfill reclamation and large scale industrial applications.

.6 Limestone:
- .1 Ground agricultural limestone.
- .2 Gradation requirements: percentage passing by weight, 90% passing 1.0 mm sieve, 50% passing 0.125 mm sieve.

.7 Use industry accepted standard medium containing nitrogen, phosphorous, potassium and other micro-nutrients suitable to specific plant species or application or defined by soil test.

2.3 SOURCE QUALITY CONTROL

.1 Advise Consultant of sources of topsoilandmanufactured topsoil to be utilized with sufficient lead time for testing.

.2 Contractor is responsible for amendments to imported soil(s) as specified.

.3 Conduct soil testing by recognized testing facility for pH, Nitrogen (N), Phosphorous (P), and Potassium (K), and organic matter.

.4 Carry out testing of topsoil by testing laboratory designated by Consultant.
- .1 Perform soil sampling, testing and analysis in accordance with applicable Provincial standards.

PART 3 EXECUTION

3.1 TEMPORARY EROSION AND SEDIMENTATION CONTROL

.1 Provide temporary erosion and sedimentation control measures to prevent soil erosion and discharge of soil-bearing water runoff or airborne dust to adjacent properties and walkways, according to requirements of authorities having jurisdictionsediment and erosion control drawingssediment and erosion control plan, specific to site, that complies with EPA-833-R-06-004 or requirements of authorities having jurisdiction, whichever is more stringent.

.2 Inspect, repair, and maintain erosion and sedimentation control measures during construction until permanent vegetation has been established.

.3 Remove erosion and sedimentation controls and restore and stabilize areas disturbed during removal.

3.2 STRIPPING OF TOPSOIL

.1 Begin topsoil stripping of areas as indicated after area has been cleared of stumps, rocks 100 mm and over, invasive and noxious plants and their reproductive parts, brush, weeds and grasses and removed from site.

.2 Strip topsoil to depths as indicated.
- .1 Avoid mixing topsoil with subsoil where textural quality will be moved outside acceptable range of intended application.

.3 Stockpile in locations as directed by Consultant.
- .1 Stockpile height not to exceed 2 m.
- .2 Protect stockpile from adverse weather conditions, contamination from invasive plant material, and compaction.
- .3 Avoid placing stockpile in low areas where natural drainage or storm water could pond, or erode these materials during inclement weather.

.4 Dispose of unused topsoil in an environmentally responsible manner but do not use as landfill as directed by Consultant.

3.3 PREPARATION OF EXISTING GRADE

.1 Verify that grades are correct.
  .1 If discrepancies occur, notify Consultant and do not start work until instructed by Consultant.

.2 Grade soil, eliminate uneven areas and low spots, ensure positive drainage.

.3 Remove debris, roots, branches, stones in excess of 50 mm diameter and other deleterious materials.
  .1 Remove soil contaminated with calcium chloride, toxic materials and petroleum products.
  .2 Remove debris which protrudes more than 75 mm above surface.
  .3 Dispose of removed material off site.

.4 Cultivate entire area which is to receive topsoil to minimum depth of 100 mm.
  .1 Cross cultivate those areas where equipment used for hauling and spreading has compacted soil.

3.4 PLACING AND SPREADING OF TOPSOIL/PLANTING SOIL

.1 Place topsoil after Consultant has accepted subgrade.

.2 Spread topsoil in uniform layers not exceeding 150 mm.

.3 Keep topsoil 15 mm below finished grade for sodded areas.

.4 Spread topsoil as indicated to the following minimum depths after settlement.
  .1 150 mm for seeded areas.
  .2 150 mm for sodded areas.
  .3 300 mm for flower beds.
  .4 500 mm for shrub beds.
  .5 600 mm for tree beds.

.5 Manually spread topsoil/planting soil around trees, shrubs and obstacles.

.6 Avoid spreading or grading in wet, frozen, or saturated state.

3.5 SOIL AMENDMENTS

.1 For planting beds: apply and thoroughly mix soil amendments into full specified depth of topsoil mm of existing soil at rate as specified and as determined from soil sample test:

3.6 FINISH GRADING

.1 Grade to eliminate rough spots and low areas and ensure positive drainage.
  .1 Prepare loose friable bed by means of cultivation and subsequent raking.

.2 Consolidate topsoil to required bulk density using equipment approved by Consultant.
  .1 Leave surfaces smooth, uniform and firm against deep footprinting.

3.7 ACCEPTANCE

.1 Consultant will inspect and test topsoil in place and determine acceptance of material, depth of topsoil and finish grading.

3.8 SURPLUS MATERIAL

.1 Dispose of surplus materials off-site not required topsoil.

3.9 CLEANING

.1 Proceed with cleaning in accordance with Section 01 74 11 - Cleaning.
- .1 Leave Work area organized and tidy at end of each day.
- .2 Keep pavement and area adjacent to site clean and free from mud, dirt, and debris at all times.

.2 Upon completion remove surplus materials, rubbish, tools and equipment.
- .1 Clean and reinstate areas affected by Work.

.3 Waste Management: separate waste materials for reuseandrecycling in accordance with Section 01 74 19 - Waste Management and Disposal
- .1 Remove recycling containers and bins from site and dispose of materials at an appropriate facility.
- .2 Divert unused fertilizer from landfill to official hazardous material collections site approved by Consultant

END OF SECTION

PART 1 GENERAL

1.1 MEASUREMENT AND PAYMENT

.1 Measure hydraulic seeding square metres of actual surface area for:
- .1 Grass mixture including fertilizer.
- .2 Areas of blending into existing turf grass will not be measured for payment.

.2 Measure maintenance during establishment period and warranty period of areas seeded in square metres.

.3 Payment for seeding made at unit price bid of actual area surface measurements taken and computed by Consultant.

1.2 ADMINISTRATIVE REQUIREMENTS

.1 Pre-Installation Meetings: conduct pre-installation meeting to verify project requirements, installation instructions and warranty requirements.

.2 Scheduling:
- .1 Schedule hydraulic seeding to coincide with preparation of soil surface.
- .2 Schedule hydraulic seeding using grass mixtures between dates recommended by Regional Agricultural Department.

1.3 REFERENCES

.1 Canada Green Building Council (CaGBC)
- .1 LEED Canada-NC Version 1.0-2004, LEED (Leadership in Energy and Environmental Design): Green Building Rating System Reference Package For New Construction and Major Renovations (including Addendum 2007).
- .2 EED Canada-CI Version 1.0-2007, LEED (Leadership in Energy and Environmental Design): Green Building Rating System Reference Guide For Commercial Interiors.

1.4 ACTION AND INFORMATIONAL SUBMITTALS

.1 Product Data:
- .1 Submit manufacturer's instructions, printed product literature and data sheets for seed, mulch, tackifier, fertilizer, liquid soil amendments and micronutrients.
- .2 Submit 2 copies of WHMIS MSDS.

.2 Submit in writing 5 days prior to commencing work:
- .1 Volume capacity of hydraulic seeder in litres.
- .2 Amount of material to be used per tank based on volume.
- .3 Number of tank loads required per hectare to apply specified slurry mixture per hectare.

.3 Certificates: product certificates signed by manufacturer certifying materials comply with specified performance characteristics and criteria and physical requirements.

.4 Test Reports: submit certified test reports showing compliance with specified performance characteristics and physical properties.

1.5 QUALITY ASSURANCE

.1 Qualifications:
- .1 Landscape Contractor: to be a Member in Good Standing of Landscape Ontario Horticultural Trades Association.
- .2 Landscape Planting Supervisor: Landscape Industry Certified Technician with Softscape Installation designation.
- .3 Landscape Maintenance Supervisor: Landscape Industry Certified Technician with Turf Maintenance designation.

1.6 DELIVERY, STORAGE AND HANDLING

.1 Deliver, store and handle materials with manufacturer's written instructions.

.2 Delivery and Acceptance Requirements:
- .1 Labelled bags of fertilizer identifying mass in kg, mix components and percentages, date of bagging, supplier's name and lot number.
- .2 Inoculant containers to be tagged with expiry date.

.3 Storage and Handling Requirements:
- .1 Store fertilizer off ground and in accordance with manufacturer's recommendations in clean, dry, well-ventilated area.
- .2 Replace defective or damaged materials with new.

1.7 WARRANTY

.1 For seeding, 12 months warranty period is extended to 1 full growing season.

.2 Contractor hereby warrants that seeding will remain free of defects in accordance with General Conditions, but for 1 full growing season.

.3 End-of-warranty inspection will be conducted by Consultant.

PART 2 PRODUCTS

2.1 MATERIALS

.1 Seed: "Canada pedigreed grade" in accordance with Government of Canada Seeds Act and Regulations.
- .1 Grass mixture: "Certified", "Canada No. 1or2 Lawn Grass Mixture" in accordance with Government of Canada "Seeds Act" and "Seeds Regulations".
  - .1 Mixture composition as recommended by Regional Agricultural Department.

.2 Mulch: specially manufactured for use in hydraulic seeding equipment, non-toxic, water activated, green colouring, free of germination and growth inhibiting factors with following properties:
- .1 Type I mulch:
  - .1 Made from wood cellulose fibre.
  - .2 Organic matter content: 95% plus or minus 0.5%.
  - .3 Value of pH: 6.0.
  - .4 Potential water absorption: 900%.

.3 Tackifier: as recommended by manufacturer.

.4 Water: free of impurities that would inhibit germination and growth.

.5 Fertilizer:
  .1 To Canada "Fertilizers Act" and Regulations.
  .2 Complete synthetic, slow release with 35% of nitrogen content in water-insoluble form.

.6 Inoculants: inoculant containers to be tagged with expiry date.

PART 3 EXECUTION

3.1 EXAMINATION

.1 Verification of Conditions: verify conditions of substrate previously installed under other Sections or Contracts are acceptable for hydraulic seeding in accordance with manufacturer's written instructions.
  .1 Visually inspect substrate in presence of Consultant.
  .2 Inform Consultant of unacceptable conditions immediately upon discovery.
  .3 Proceed with installation only after unacceptable conditions have been remedied and after receipt of written approval to proceed from Consultant.

3.2 INSTALLERS

.1 Use installers members in Good Standing of Landscape Ontario Horticultural Trades Association.

3.3 PROTECTION OF EXISTING CONDITIONS

.1 Protect structures, signs, guide rails, fences, plant material, utilities and other surfaces not intended for spray.

.2 Immediately remove any material sprayed where not intended as directed by Consultant.

3.4 PREPARATION OF SURFACES

.1 Do not perform work under adverse field conditions such as wind speeds over 10 km/h, frozen ground or ground covered with snow, ice or standing water.

.2 Fine grade areas to be seeded free of humps and hollows.
  .1 Ensure areas are free of deleterious and refuse materials.

.3 Cultivated areas identified as requiring cultivation to depth of 25 mm.

.4 Ensure areas to be seeded are moist to depth of 150 mm before seeding.

.5 Obtain Consultant's approval of grade and topsoil depth before starting to seed.

3.5 FERTILIZING PROGRAM

.1 Fertilize prior to fine grading applying fertilizer equally distributed in accordance with the following program:

Date Range	Date	And	Date	Application Rate (kg, mý, ha)	Formulation (NPK Ratio)
Between					
Between					
Between					

.2 Fertilize during establishment and warranty periods applying fertilizer equally distributed in accordance with the following program:

Date Range	Date	And	Date	Application Rate (kg, mý, ha)	Formulation (NPK Ratio)
Between					
Between					
Between					

3.6 PREPARATION OF SLURRY

.1 Measure quantities of materials by weight or weight-calibrated volume measurement satisfactory to Consultant. Supply equipment required for this work.

.2 Charge required water into seeder. Add material into hydraulic seeder under agitation. Pulverize mulch and charge slowly into seeder.

.3 After materials are in seeder and well mixed, charge tackifier into seeder and mix thoroughly to complete slurry.

3.7 SLURRY APPLICATION

.1 Ensure seed is placed under supervision of certified Landscape Planting Supervisor.

.2 Hydraulic seeding equipment:
- .1 Slurry tank.
- .2 Agitation system for slurry to be capable of operating during charging of tank and during seeding, consisting of recirculation of slurry and/or mechanical agitation method.
- .3 Capable of seeding by 50 m hand operated hoses and appropriate nozzles.
- .4 Tank volume to be certified by certifying authority and identified by authorities "Volume Certification Plate".

.3 Slurry mixture applied per hectare.
- .1 Seed: grass mixture 300 kg/ha.
- .2 Mulch: Type I 1600 kg/ha or 2250 kg/ha areas subject to wind and water erosion.
- .3 Tackifier: rate recommended by Manufacturer.
- .4 Water: Minimum 30,000 L.
- .5 Fertilizer: 300 kg/ha, ratio: 12-51-0.

.4 Apply slurry uniformly, at optimum angle of application for adherence to surfaces and germination of seed.
- .1 Using correct nozzle for application.
- .2 Using hoses for surfaces difficult to reach and to control application.

.5 Blend application 300 mm into adjacent grass areas or sodded areas to form uniform surfaces.

.6 Re-apply where application is not uniform.

.7 Remove slurry from items and areas not designated to be sprayed.

3.8 CLEANING

.1 Progress Cleaning:
- .1 Leave Work area clean at end of each day.
- .2 Keep pavement and area adjacent to site clean and free from mud, dirt, and debris at all times.

.2 Final Cleaning: upon completion remove surplus materials, rubbish, tools and equipment:.
- .1 Clean and reinstate areas affected by Work.

.3 Waste Management: separate waste materials for reuse and recycling:
- .1 Remove recycling containers and bins from site and dispose of materials at appropriate facility.
- .2 Divert unused fertilizer from landfill to official hazardous material collections site approved by Consultant.

3.9 PROTECTION

.1 Protect seeded areas from trespass until plants are established.

.2 Remove protection devices as directed by Consultant.

3.10 MAINTENANCE DURING ESTABLISHMENT PERIOD

.1 Ensure maintenance is curried out under supervision of certified Landscape Maintenance Supervisor.

.2 Perform following operations from time of seed application until acceptance by Consultant.

.3 Grass Mixture:
- .1 Repair and reseed dead or bare spots to allow establishment of seed prior to acceptance.
- .2 Mow grass to 50 mm whenever it reaches height of 70 mm. Remove clippings which will smother grass.
- .3 Fertilize seeded areas after first cutting or 10 weeks after germination provided plants have mature true leafs in accordance with fertilizing program. Spread half of required amount of fertilizer in one direction and remainder at right angles.
- .4 Control weeds by mechanical or chemical means utilizing acceptable integrated pest management practices.
- .5 Water seeded area to maintain optimum soil moisture level for germination and continued growth of grass. Control watering to prevent washouts.

3.11 ACCEPTANCE

.1 Seeded areas will be accepted by Consultant provided that:
- .1 Seeded areas are free of rutted, eroded, bare or dead spots.
- .2 Areas have been mown at least twice.
- .3 Areas have been fertilized.

.2 Areas seeded in fall will achieve final acceptance in following spring, one month after start of growing season provided acceptance conditions are fulfilled.

3.12 MAINTENANCE DURING WARRANTY PERIOD

.1 Perform following operations from time of acceptance until end of warranty period:
- .1 Repair and reseed dead or bare spots to satisfaction of Consultant.
- .2 Mow areas seeded, remove clippings that will smother grassed areas, as directed by Consultant, and in accordance with following schedule:

Seed Mixture	Freqency	Requirements for Cutting	Height of Cut

- .3 Fertilize seeded areas in accordance with fertilizing program. Spread half of required amount of fertilizer in one direction and remainder at right angles and water in well.

END OF SECTION